Protected by copyright. Copying for private or commercial purposes, in part or in whole, is not permitted unless authorised by Volkswagen AG. Volkswagen AG does not guarantee or accept any liability with respect to the correctness of information in this document. Copyright by Volkswagen AG.

Workshop Manual

Bora 1999 ➤ , Bora Variant 1999 ➤ ,
Fox 2005 ➤ , Golf 1992 ➤ , Golf 1998 ➤ ,
Golf 2004 ➤ , Golf Cabrio 1994 ➤ ,
Golf Cabrio 1998 ➤ , Golf GTI 2005 ➤ ,
Golf Plus 2005 ➤ , Golf Variant 1992 ➤ ,
Golf Variant 1998 ➤ ,
Golf Variant 2007 ➤ , Jetta 2005 ➤ ,
Lupo 1999 ➤ , Lupo 3L 1999 ➤ ,
New Beetle 1999 ➤ ,
New Beetle Cabrio 2003 ➤ ,
New Beetle RSI 2001 ➤ , Passat 1994 ➤ ,
Passat 1997 ➤ , Passat 2006 ➤ ,
Passat Variant 2006 ➤ , Polo 1995 ➤ ,
Polo 2002 ➤ , Polo Classic 1996 ➤ ,
Polo Variant 1998 ➤ , Sharan 1996 ➤ ,
Touareg 2003 ➤ , Vento 1992 ➤

Wheels and Tyres Guide - Archive

Edition 05.2014

satelettronica

List of Workshop Manual Repair Groups

Repair Group

44 - Wheels, tyres, vehicle geometry

Protected by copyright. Copying for private or commercial purposes, in part or in whole, is not permitted unless authorised by Volkswagen AG. Volkswagen AG does not guarantee or accept any liability with respect to the correctness of information in this document. Copyright by Volkswagen AG.

satelettronica

Technical information should always be available to the foremen and mechanics, because their careful and constant adherence to the instructions is essential to ensure vehicle road-worthiness and safety. In addition, the normal basic safety precautions for working on motor vehicles must, as a matter of course, be observed.

All rights reserved.
No reproduction without prior agreement from publisher.

Copyright © 2015 Volkswagen AG, Wolfsburg

00053148620

Contents

44 - Wheels, tyres, vehicle geometry 1
1 General notes on wheels and tyres (passenger cars) 1
2 Legislative and technical conditions for converting wheel and tyre combinations 3
2.1 Legislative conditions for converting wheel and tyre combinations 3
2.2 Technical conditions for converting wheel and tyre combinations 3
2.3 Additional wheel housing extensions (flaps) 4
2.4 “Series 80” tyres 4
2.5 Vehicles with Plus running gear 4
3 Documents and codes/designations 6
3.1 New vehicle registration documents since 01.10.2005 6
3.2 COC document (EEC Certificate of Conformity) 7
3.3 Official type designations 7
3.4 EU general type approval number, sales type and sales or trade designation 8
4 Useful information regarding tyres 10
4.1 Identification markings on the tyre sidewall 10
4.2 Explanation of tyre markings 11
4.3 Speed ratings for tyres 12
4.4 Undulations 13
4.5 Tyre storage 14
4.6 Tyre ageing 14
4.7 Winter tyres 15
4.8 Winter tyres with speed symbol “V” 16
4.9 Extra Load (XL) V winter tyres 17
4.10 Maximum speeds for V and Extra Load (XL) winter tyres 17
4.11 Reinforced and Extra Load (XL) tyres 18
4.12 Snow chains 18
5 Tyre wear/ mileage for passenger car tyres 20
5.1 General 20
5.2 Requirements to be met by tyres 20
5.3 Wear behaviour of high-speed tyres 21
5.4 Factors influencing the service life of a tyre 21
5.5 Driving style 21
5.6 Tyre maintenance 22
5.7 Evenly worn tyres 23
5.8 Measuring tread depth 24
5.9 One-sided wear 24
5.10 Outer shoulder wear 27
5.11 Wear in middle of tyre 27
5.12 Diagonal washout 29
6 Tyre noise 30
6.1 General notes on tyre noise 30
6.2 Saw-tooth wear 30
6.3 Flat spots (from locking wheels) 31
7 Rough running caused by wheels/tyres 33
7.1 Causes of rough running 33
7.2 Balancing wheels 33
7.3 Conducting a road test before balancing wheels 33
7.4 Balancing wheels on stationary wheel balancing machine 34
7.5 Vibration control system VAS 6230 36
7.6 Finish balancer 36
7.7 Radial and lateral runout of wheels and tyres 37
7.8 Checking radial and lateral runout on wheels and tyres with tyre gauge V.A.G 1435 37

satelettronica

7.9 Checking radial and lateral runout on wheel rim . . . 38
7.10 Matching . . . 39
7.11 Flat spots caused by storage or handling . . . 40
8 Vehicle pulls to one side . . . 42
8.1 General . . . 42
8.2 Conicity . . . 42
8.3 Remedies when vehicle pulls to one side . . . 43
8.4 Strategic rotation of wheels for non-directional tyres . . . 44
8.5 Strategic rotation of wheels having unidirectional tyres . . . 45
9 Tyre damage . . . 47
9.1 General information . . . 47
9.2 Construction of a radial belted tyre . . . 47
9.3 Impact damage . . . 48
9.4 Cuts . . . 49
9.5 Damage caused by foreign bodies . . . 49
9.6 Loss of air from tyre . . . 50
9.7 Tyre pressure . . . 50
9.8 Tyre damage due to insufficient tyre pressure . . . 51
9.9 Rising tyre temperature caused by insufficient inflation pressure . . . 52
9.10 Tyre damage due to fitting error (fitting damage) . . . 53
10 Tyres with run-flat properties . . . 55
10.1 General . . . 55
10.2 Design and identification . . . 56
10.3 Retrofitting/requirements when using run-flat tyres . . . 56
10.4 Repairs . . . 57
11 Rolling resistance optimised tyres . . . 58
12 Facts about disc-type wheels (passenger cars) . . . 59
12.1 Design of disc-type wheel . . . 59
12.2 Data on wheel rims . . . 59
12.3 Wheel rims - pitch circle diameter . . . 60
12.4 Split rim composite wheels . . . 60
12.5 Alloy wheels with exchangeable trim elements . . . 60
12.6 Alloy wheels with exchangeable trim elements (Zaragoza) . . . 61
12.7 Hub cover for alloy wheels with open threaded connections . . . 65
12.8 Care and maintenance of alloy wheel rims . . . 65
12.9 Restoring alloy wheels . . . 66
12.10 The valve . . . 67
13 Fitting and removing wheels . . . 68
13.1 Rotating wheels . . . 68
13.2 Instructions for changing or fitting wheels . . . 68
13.3 Revised wheel bolts for Sharan from model year 2001 . . . 70
13.4 Notes on use of temporary spare wheels . . . 70
14 Lupo 3L, Lupo FSI, Lupo GTI from model year 1999 . . . 72
14.1 Lupo 3L, type 6E model year 1999 to model year 2006 . . . 72
14.2 Wheel allocation for Lupo 3L, type 6E model year 1999 to model year 2006 . . . 73
14.3 Lupo FSI, type 6E model year 2001 to model year 2006 . . . 74
14.4 Wheel allocation for Lupo FSI, type 6E model year 2001 to model year 2006 . . . 75
14.5 Lupo GTI, type 6ES model year 2001 to model year 2006 . . . 77
14.6 Wheel allocation for Lupo GTI, type 6ES model year 2001 to model year 2006 . . . 78
15 Lupo model year 1999 to model year 2005 . . . 80
15.1 Lupo, type 6X model year 1999 to model year 2005 . . . 80
15.2 Wheel allocation for Lupo, type 6X model year 1999 to model year 2005 . . . 82
16 Fox from model year 2005 . . . 88
16.1 Fox, type 5Z model year 2005 to model year 2012 . . . 88

Copyright by Volkswagen AG. Volkswagen AG does not guarantee or accept any liability with respect to the correctness of information in this document. Copyright by Volkswagen AG. Duplicate copy for private and commercial use permitted only with authorised VW workshop equipment.

satelettronica

16.2 Wheel allocation for Fox, type 5Z model year 2005 to model year 2012 89
17 Polo model year 1995 to model year 2001 95
17.1 Polo, type 6N up to and including 07.95 95
17.2 Wheel allocation for Polo, type 6N up to and including 07.95 96
17.3 Polo, type 6N from 08.95 up to and including model year 1996 98
17.4 Polo, type 6N from model year 1997 to model year 1999 99
17.5 Wheel allocation for Polo, type 6N from 08.95 to model year 1999 100
17.6 Polo, type 6N from model year 2000 to model year 2001 105
17.7 Wheel allocation for Polo, type 6N from model year 2000 to model year 2001 106
18 Polo Classic model year 1996 to model year 2002 112
18.1 Polo Classic, type 6KV model year 1996 to model year 2002 112
18.2 Wheel allocation for Polo Classic, type 6KV model year 1996 to model year 2002 114
19 Polo Variant model year 1998 to model year 2002 118
19.1 Polo Variant type 6KV model year 1998 to model year 2002 118
19.2 Wheel allocation for Polo Variant type 6KV model year 1998 to model year 2002 120
20 Polo from model year 2002 124
20.1 Polo, type 9N model year 2002 to model year 2008 124
20.2 Polo, type 9N model year 2009 127
20.3 Wheel allocation for Polo, type 9N model year 2002 to model year 2009 131
21 Polo Fun model year 2004 to model year 2005 139
21.1 Polo Fun, type 9N model year 2004 to model year 2005 139
21.2 Wheel allocation for Polo Fun, type 9N model year 2004 to model year 2005 140
22 CrossPolo from model year 2006 142
22.1 CrossPolo, type 9N model year 2006 to model year 2009 142
22.2 Wheel allocation for CrossPolo, type 9N model year 2006 to model year 2009 143
23 Polo BlueMotion from model year 2007 145
23.1 Polo BlueMotion, type 9N model year 2007 to model year 2009 145
23.2 Wheel allocation for Polo BlueMotion, type 9N model year 2007 to model year 2009 146
24 Polo GTI from model year 2006 148
24.1 Polo GTI, type 9N model year 2006 to model year 2009 148
24.2 Wheel allocation for Polo GTI, type 9N model year 2006 to model year 2009 149
25 Polo GTI Cup Edition from model year 2007 154
25.1 Polo GTI Cup Edition, type 9N model year 2007 to model year 2009 154
25.2 Wheel allocation for Polo GTI Cup Edition, type 9N model year 2007 to model year 2009 155
26 Polo saloon/sedan model year 2004 to model year 2005 159
26.1 Polo saloon/sedan, type 9N model year 2004 to model year 2005 159
26.2 Wheel allocation for Polo saloon/sedan, type 9N model year 2004 to model year 2005 161
27 Golf model year 1992 to model year 1998 166
27.1 Golf type 1HX0, Golf Syncro 1HX1, Golf type 1H 166
27.2 Wheel allocation for Golf type 1HX0, Golf Syncro 1HX1, Golf type 1H 170
28 Golf model year 1998 to model year 2004, Golf R32, Golf Anniversary GTI 180
28.1 Golf, Golf 4Motion, type 1J model year 1998 to model year 2004 180
28.2 Wheel allocation for Golf, Golf 4Motion, type 1J model year 1998 to model year 2004 183
28.3 Conditions for fitting 17" wheels and tyres to Golf model year 1998 to model year 2004 195
28.4 Golf R32, type 1J model year 2003 to model year 2005 196
28.5 Wheel allocation for Golf R32, type 1J model year 2003 to model year 2005 196
28.6 Golf Anniversary GTI, type 1J model year 2002 198
28.7 Wheel allocation for Golf Anniversary GTI, type 1J model year 2002 198
28.8 Conditions for fitting 17" and 18" wheels and tyres of Golf Anniversary GTI 203
29 Golf model year 2004 to model year 2009 204
29.1 Golf, Golf 4Motion, type 1K model year 2004 to model year 2006 204
29.2 Golf, Golf 4Motion, type 1K model year 2007 to model year 2009 207
29.3 Wheel allocation for Golf, Golf 4Motion, type 1K model year 2004 to model year 2009 211

satelettronica

Copyright by Volkswagen AG. Volkswagen AG does not guarantee or accept any liability with respect to the correctness of information in this document. Copyright by Volkswagen AG. Reproduction, distribution or publication for commercial purposes, in part or in whole, is not permitted unless authorised by Volkswagen AG.

30 Golf BlueMotion model year 2008 to model year 2009 . . . 224
30.1 Golf BlueMotion, type 1K model year 2008 to model year 2009 . . . 224
30.2 Wheel allocation for Golf BlueMotion, type 1K model year 2008 to model year 2009 . . . 225
31 Golf GTI model year 2005 to model year 2009 . . . 232
31.1 Golf GTI, type 1K model year 2005 to model year 2008 . . . 232
31.2 Golf GTI, type 1K model year 2009 . . . 233
31.3 Wheel allocation for Golf GTI, type 1K model year 2005 to model year 2009 . . . 235
32 Pirelli Golf model year 2008 to model year 2009 . . . 246
32.1 Pirelli Golf, type 1K model year 2008 to model year 2009 . . . 246
32.2 Wheel allocation for Pirelli Golf, type 1K model year 2008 to model year 2009 . . . 247
33 Golf R32 model year 2006 to model year 2009 . . . 259
33.1 Golf R32, type 1K model year 2006 to model year 2009 . . . 259
33.2 Wheel allocation for Golf R32, type 1K model year 2006 to model year 2009 . . . 260
34 CrossGolf from model year 2007 . . . 266
34.1 CrossGolf, type 1KP model year 2007 to model year 2009 . . . 266
34.2 Wheel allocation for CrossGolf, type 1KP model year 2007 to model year 2009 . . . 269
35 Golf Plus from model year 2005 . . . 280
35.1 Golf Plus, type 1KP model year 2005 to model year 2006 . . . 280
35.2 Golf Plus, type 1KP model year 2007 to model year 2009 . . . 282
35.3 Wheel allocation for Golf Plus, type 1KP model year 2005 to model year 2009 . . . 285
36 Golf Plus BlueMotion from model year 2008 . . . 298
36.1 Golf Plus BlueMotion, type 1KP model year 2008 to model year 2009 . . . 298
36.2 Wheel allocation for Golf Plus BlueMotion, type 1KP model year 2008 to model year 2009 . . . 299
37 Golf Variant model year 1994 to model year 1998 . . . 306
37.1 Golf Variant type 1HX0, Golf Variant Syncro type 1HX1, Golf Variant type 1H . . . 306
37.2 Wheel allocation for Golf Variant type 1HX0, Golf Variant Syncro type 1HX1, Golf Variant type 1H . . . 309
38 Golf Variant model year 1999 to model year 2006, Bora Variant model year 1999 to model year 2005 . . . 317
38.1 Golf Variant, Golf Variant 4Motion, Bora Variant, Bora Variant 4Motion, type 1J . . . 317
38.2 Wheel allocation for Golf Variant, Golf Variant 4Motion, Bora Variant, Bora Variant 4Motion, type 1J . . . 320
38.3 Conditions for fitting 17" wheels and tyres . . . 331
39 Golf Variant model year 2007 to model year 2010 . . . 332
39.1 Golf Variant, Golf Variant 4Motion; type 1KM model year 2007 to model year 2008 . . . 332
39.2 Golf Variant, Golf Variant 4Motion; type 1KM model year 2009 to model year 2010 . . . 335
39.3 Wheel allocation for Golf Variant, Golf Variant 4Motion; type 1KM model year 2007 to model year 2010 . . . 338
40 Golf Variant BlueMotion model year 2008 to model year 2010 . . . 350
40.1 Golf Variant BlueMotion, type 1KM model year 2008 to model year 2010 . . . 350
40.2 Wheel allocation for Golf Variant BlueMotion, type 1KM model year 2008 to model year 2010 . . . 351
41 Jetta Model Year 2006 to Model Year 2011 . . . 358
41.1 Jetta, type 1KM model year 2006 . . . 358
41.2 Jetta, type 1KM model year 2007 to model year 2008 . . . 360
41.3 Jetta, type 1KM model year 2009 to model year 2011 . . . 363
41.4 Wheel allocation for Jetta, type 1KM model year 2006 to model year 2011 . . . 370
42 Jetta BlueMotion from Model year 2008 . . . 387
42.1 Jetta BlueMotion, type 1KM model year 2008 to model year 2011 . . . 387
42.2 Wheel allocation for Jetta BlueMotion, type 1KM model year 2008 to model year 2011 . . . 388
43 Golf cabriolet model year 1994 to model year 1997 . . . 397
43.1 Golf cabriolet type 1EX0 model year 1994 to model year 1997 . . . 397
43.2 Wheel allocation for Golf cabriolet, type 1EX0 from model year 1994 to model year 1997 . . . 398

satelettronica

44 Golf cabriolet model year 1998 to model year 2002 . . . 402
44.1 Golf cabriolet; type 1E from model year 1998 to model year 2002 . . . 402
44.2 Wheel allocation for Golf cabriolet; type 1E from model year 1998 to model year 2002 . . . 403
45 Vento from model year 1992 to model year 1998 . . . 408
45.1 Vento; type 1HX0, 1H . . . 408
45.2 Wheel allocation for Vento; type 1HX0, 1H . . . 410
46 Bora model year 1999 to model year 2005 . . . 419
46.1 Bora, Bora 4Motion, type 1J model year 1999 to model year 2005 . . . 419
46.2 Wheel allocation for Bora, Bora 4Motion, type 1J model year 1999 to model year 2005 . . . 422
46.3 Conditions for fitting 17" wheels and tyres . . . 433
47 New Beetle from model year 1999 . . . 434
47.1 New Beetle, type 9C model year 1999 to model year 2010 . . . 434
47.2 Wheel allocation for New Beetle, type 9C model year 1999 to model year 2010 . . . 437
47.3 Conditions for fitting 17" wheels and tyres . . . 448
48 New Beetle Cabriolet from model year 2003 . . . 450
48.1 New Beetle Cabriolet, type 1Y model year 2003 to model year 2010 . . . 450
48.2 Wheel allocation for New Beetle Cabriolet, type 1Y model year 2003 to model year 2010 . . . 452
48.3 Conditions for fitting 17" wheels and tyres . . . 463
49 New Beetle RSi . . . 465
49.1 New Beetle RSi, type 9CR from model year 2001 . . . 465
49.2 Wheel allocation for New Beetle RSi, type 9CR from model year 2001 . . . 466
50 Passat model year 1994 to model year 1997 . . . 468
50.1 Passat, type 35I model year 1994 to model year 1997 . . . 468
50.2 Wheel allocation for Passat, type 35I model year 1994 to model year 1997 . . . 470
51 Passat model year 1997 to model year 2005 . . . 476
51.1 Passat, Passat Variant, type 3B model year 1997 to model year 2000 . . . 476
51.2 Passat, Passat Variant, type 3B model year 1997 to model year 2000 . . . 478
51.3 Passat, Passat Variant, type 3BG model year 2001 to model year 2005 . . . 481
51.4 Wheel allocation for Passat, Passat Variant, type 3BG model year 2001 to model year 2005 . . . 482
51.5 Passat W8 4Motion, type 3BS model year 2002 to model year 2005 . . . 488
51.6 Wheel allocation for Passat W8 4Motion, type 3BS model year 2002 to model year 2005 . . . 489
51.7 Passat Protect, type 3BL model year 2002 to model year 2005 . . . 491
51.8 Wheel allocation for Passat Protect, type 3BL model year 2002 to model year 2005 . . . 492
52 Passat saloon from model year 2006 . . . 494
52.1 Passat saloon, type 3C model year 2006 . . . 494
52.2 Passat saloon, type 3C model year 2007 to model year 2008 . . . 497
52.3 Passat saloon, type 3C model year 2009 . . . 505
52.4 Passat saloon, type 3C model year 2010 to model year 2011 . . . 512
52.5 Wheel allocation for Passat saloon, type 3C model year 2006 to model year 2011 . . . 516
53 Passat saloon BlueMotion from model year 2008 . . . 525
53.1 Passat saloon BlueMotion, type 3C model year 2008 to model year 2009 . . . 525
53.2 Passat saloon BlueMotion, type 3C model year 2010 to model year 2011 . . . 527
53.3 Wheel allocation for Passat saloon BlueMotion, type 3C model year 2008 to model year 2011 . . . 528
54 Passat Variant from model year 2006 . . . 537
54.1 Passat Variant, type 3C model year 2006 . . . 537
54.2 Passat Variant, type 3C model year 2007 to model year 2008 . . . 541
54.3 Passat Variant, type 3C model year 2009 . . . 551
54.4 Passat Variant, type 3C model year 2010 to model year 2011 . . . 559
54.5 Wheel allocation for Passat Variant, type 3C model year 2006 to model year 2011 . . . 563
55 Passat Variant BlueMotion from model year 2008 . . . 572

satelettronica

55.1 Passat Variant BlueMotion, type 3C model year 2008 to model year 2009 572
55.2 Passat Variant BlueMotion, type 3C model year 2010 to model year 2011 574
55.3 Wheel allocation for Passat Variant BlueMotion, type 3C model year 2008 to model year 2011 575

56 Passat R36 from model year 2008 584
56.1 Passat R36, type 3C model year 2008 to model year 2009 584
56.2 Passat R36, type 3C model year 2010 to model year 2011 586
56.3 Wheel allocation for Passat R36, type 3C model year 2008 to model year 2011 587

57 Sharan from model year 1996 593
57.1 Sharan, Sharan Syncro, type 7M model year 1996 to model year 2000 593
57.2 Wheel allocation for Sharan, Sharan Syncro. Type 7M model year 1996 to model year 2000 596
57.3 Sharan, Sharan 4Motion, type 7M model year 2001 598
57.4 Wheel allocation for Sharan, Sharan 4Motion, type 7M model year 2001 601
57.5 Sharan, Sharan 4Motion, type 7M model year 2002 to model year 2010 605
57.6 Wheel allocation for Sharan, Sharan 4Motion, type 7M model year 2002 to model year 2010 606

58 Sharan BlueMotion from model year 2009 611
58.1 Sharan BlueMotion, type 7M model year 2009 to model year 2010 611
58.2 Wheel allocation for Sharan BlueMotion, type 7M model year 2009 to model year 2010 . . 612

59 Touareg from model year 2003 614
59.1 Touareg, type 7L, model year 2003 to model year 2010 614
59.2 Wheel allocation for Touareg, type 7L model year 2003 to model year 2010 618

60 Touareg R50 from model year 2008 627
60.1 Touareg R50, type 7L model year 2008 to model year 2010 627
60.2 Wheel allocation for Touareg R50, type 7L model year 2008 to model year 2010 628

61 Breakdown set for VW Vehicles 633

62 Temporary spare tyres and wheels for VW vehicles 634

63 Recommended summer tyres 636
63.1 Summer tyres for Lupo 3L model year 1999 to model year 2005 636
63.2 Summer tyres for Lupo FSI model year 1999 to model year 2005 636
63.3 Summer tyres for Lupo GTI model year 1999 to model year 2005 636
63.4 Summer tyres for Lupo model year 1999 to model year 2005 636
63.5 Summer tyres for Fox from model year 2005 637
63.6 Summer tyres for Polo model year 1995 to model year 2001 637
63.7 Summer tyres for Polo saloon/sedan model year 2004 to model year 2005 638
63.8 Summer tyres for Polo Classic model year 1996 to model year 2002 638
63.9 Summer tyres for Polo Variant model year 1998 to model year 2002 639
63.10 Summer tyres for Polo from model year 2002 639
63.11 Summer tyres for Polo Fun model year 2004 to model year 2005 640
63.12 Summer tyres for CrossPolo from model year 2006 640
63.13 Summer tyres for Polo BlueMotion from model year 2007 641
63.14 Summer tyres for Polo GTI from model year 2007 641
63.15 Summer tyres for Polo GTI Cup Edition from model year 2007 641
63.16 Summer tyres for Golf, Vento model year 1992 to model year 1998 641
63.17 Summer tyres for Golf Variant model year 1994 to model year 1998 642
63.18 Summer tyres for Golf cabriolet model year 1994 to model year 1997 643
63.19 Summer tyres for Golf, Golf 4Motion model year 1998 to model year 2004 643
63.20 Summer tyres for Golf model year 2004 to model year 2009 644
63.21 Summer tyres for Golf BlueMotion model year 2008 to model year 2009 646
63.22 Summer tyres for Golf GTI model year 2005 to model year 2009 646
63.23 Summer tyres for Pirelli Golf model year 2008 to model year 2009 646
63.24 Summer tyres for Golf R32 model year 2006 to model year 2009 647
63.25 Summer tyres for CrossGolf from model year 2007 647
63.26 Summer tyres for Golf Plus from model year 2005 648

satelettronica

63.27 Summer tyres for Golf Plus BlueMotion from model year 2008 . . . 649
63.28 Summer tyres for Bora, Bora 4Motion model year 1999 to model year 2005 . . . 649
63.29 Summer tyres for Golf Variant, Golf Variant 4Motion model year 1999 to model year 2006, Bora Variant, Bora Variant 4Motion model year 1999 to model year 2005 . . . 650
63.30 Summer tyres for Golf R32 . . . 651
63.31 Summer tyres for Golf Anniversary GTI . . . 652
63.32 Summer tyres for Golf Variant model year 2007 to model year 2010 . . . 652
63.33 Summer tyres for Golf Variant BlueMotion from model year 2008 . . . 653
63.34 Summer tyres for Jetta Model Year 2006 to Model Year 2011 . . . 653
63.35 Summer tyres for Jetta BlueMotion Model Year 2008 to Model Year 2011 . . . 655
63.36 Summer tyres for Golf cabriolet model year 1998 to model year 2002 . . . 656
63.37 Summer tyres for New Beetle from model year 1999 . . . 657
63.38 Summer tyres for New Beetle Cabriolet from model year 2003 . . . 658
63.39 Summer tyres for New Beetle RSi . . . 658
63.40 Summer tyres for Passat model year 1994 to model year 1997 . . . 659
63.41 Summer tyres for Passat model year 1997 to model year 2005 . . . 659
63.42 Summer tyres for Passat W8 . . . 660
63.43 Summer tyres for Passat Protect . . . 660
63.44 Summer tyres for Passat saloon from model year 2006 . . . 660
63.45 Summer tyres for Passat saloon BlueMotion from model year 2008 . . . 661
63.46 Summer tyres for Passat Variant from model year 2006 . . . 662
63.47 Summer tyres for Passat Variant BlueMotion from model year 2008 . . . 663
63.48 Summer tyres for Passat R36 from model year 2008 . . . 664
63.49 Summer tyres for Sharan from model year 1996 . . . 665
63.50 Summer tyres for Sharan BlueMotion from model year 2009 . . . 665
63.51 Summer tyres for Touareg model year 2008 to model year 2010 . . . 666
63.52 Summer tyres for Touareg R50 model year 2008 to model year 2010 . . . 666
64 Recommended all-season tyres . . . 667
64.1 All-season tyres Lupo model year 1999 to model year 2005 . . . 667
64.2 All-season tyres Polo model year 1995 to model year 2001 . . . 667
64.3 All-season tyres for Polo from model year 2002 . . . 667
64.4 All-season tyres Polo saloon/sedan model year 2004 to model year 2005 . . . 668
64.5 All-season tyres Golf, Vento model year 1992 to model year 1998 . . . 668
64.6 All-season tyres Golf Variant model year 1994 to model year 1998 . . . 668
64.7 All-season tyres Golf cabriolet model year 1994 to model year 1997 . . . 668
64.8 All-season tyres Golf, Golf 4Motion model year 1998 to model year 2004 . . . 668
64.9 All-season tyres for Golf model year 2004 to model year 2009 . . . 669
64.10 All-season tyres for CrossGolf from model year 2007 . . . 669
64.11 All-season tyres for Golf Plus from model year 2005 . . . 670
64.12 All-season tyres Bora, Bora 4Motion model year 1999 to model year 2005 . . . 670
64.13 All-season tyres Golf Variant, Golf Variant 4Motion model year 1999 to model year 2006, Bora Variant, Bora Variant 4Motion model year 1999 to model year 2005 . . . 671
64.14 All-season tyres Golf Variant model year 2007 to model year 2010 . . . 671
64.15 All-season tyres Jetta Model Year 2006 to Model Year 2011 . . . 671
64.16 All-season tyres Golf cabriolet model year 1998 to model year 2002 . . . 672
64.17 All-season tyres for New Beetle from model year 1999 . . . 672
64.18 All-season tyres for New Beetle Cabriolet from model year 2003 . . . 673
64.19 All-season tyres Passat model year 1997 to model year 2005 . . . 673
64.20 All-season tyres for Passat W8 . . . 673
64.21 All-season tyres for Passat saloon from model year 2006 . . . 674
64.22 All-season tyres for Passat saloon BlueMotion from model year 2008 . . . 674
64.23 All-season tyres for Passat Variant from model year 2006 . . . 674
64.24 All-season tyres for Passat Variant BlueMotion from model year 2008 . . . 674
64.25 All-season tyres for Passat R36 from model year 2008 . . . 675
64.26 All-season tyres for Touareg model year 2003 to model year 2010 . . . 675
65 Recommended winter tyres . . . 676

Copyright by Volkswagen AG. Volkswagen AG does not guarantee or accept any liability with respect to the correctness of information. Copying for private or commercial purposes, in part or in whole, is not permitted unless authorised by Volkswagen AG.
satelettronica

65.1 Winter tyres Lupo 3L model year 1999 to model year 2005 . . . 676
65.2 Winter tyres Lupo FSI model year 1999 to model year 2005 . . . 676
65.3 Winter tyres Lupo GTI model year 1999 to model year 2005 . . . 676
65.4 Winter tyres Lupo model year 1999 to model year 2005 . . . 677
65.5 Winter tyres for Fox from model year 2005 . . . 677
65.6 Winter tyres Polo model year 1995 to model year 2001 . . . 677
65.7 Winter tyres for Polo from model year 2002 . . . 678
65.8 Winter tyres for Polo Fun model year 2004 to model year 2006 . . . 678
65.9 Winter tyres for CrossPolo from model year 2006 . . . 678
65.10 Winter tyres for Polo BlueMotion from model year 2007 . . . 678
65.11 Winter tyres for Polo GTI from model year 2007 . . . 679
65.12 Winter tyres for Polo GTI Cup Edition from model year 2007 . . . 679
65.13 Winter tyres Polo saloon/sedan model year 2004 to model year 2005 . . . 679
65.14 Winter tyres Polo Classic model year 1996 to model year 2002 . . . 679
65.15 Winter tyres Polo Variant model year 1998 to model year 2002 . . . 680
65.16 Winter tyres Golf, Vento model year 1992 to model year 1998 . . . 680
65.17 Winter tyres Golf Variant model year 1994 to model year 1998 . . . 681
65.18 Winter tyres Golf cabriolet model year 1994 to model year 1997 . . . 681
65.19 Winter tyres Golf, Golf 4Motion model year 1998 to model year 2004 . . . 681
65.20 Winter tyres for Golf model year 2004 to model year 2009 . . . 682
65.21 Winter tyres for Golf BlueMotion model year 2004 to model year 2009 . . . 683
65.22 Winter tyres for Golf GTI model year 2005 to model year 2009 . . . 683
65.23 Winter tyres for Pirelli Golf model year 2008 to model year 2009 . . . 683
65.24 Winter tyres for Golf R32 model year 2006 to model year 2009 . . . 684
65.25 Winter tyres for CrossGolf from model year 2007 . . . 684
65.26 Winter tyres for Golf Plus from model year 2005 . . . 684
65.27 Winter tyres for Golf Plus BlueMotion from model year 2008 . . . 685
65.28 Winter tyres Bora, Bora 4Motion model year 1999 to model year 2005 . . . 685
65.29 Winter tyres Golf Variant, Golf Variant 4Motion model year 1999 to model year 2006, Bora Variant, Bora Variant 4Motion model year 1999 to model year 2005 . . . 686
65.30 Winter tyres for Golf 32 . . . 686
65.31 Winter tyres for Golf Anniversary GTI . . . 686
65.32 Winter tyres Golf Variant model year 2007 to model year 2010 . . . 687
65.33 Winter tyres for Golf Variant BlueMotion model year 2008 to model year 2010 . . . 687
65.34 Winter tyres Jetta Model Year 2006 to Model Year 2011 . . . 688
65.35 Winter tyres Jetta BlueMotion Model Year 2008 to Model Year 2011 . . . 688
65.36 Winter tyres Golf cabriolet model year 1998 to model year 2002 . . . 688
65.37 Winter tyres for New Beetle from model year 1999 . . . 689
65.38 Winter tyres for New Beetle Cabriolet from model year 2003 . . . 689
65.39 Winter tyres for New Beetle RSi . . . 690
65.40 Winter tyres Passat model year 1994 to model year 1997 . . . 690
65.41 Winter tyres Passat model year 1997 to model year 2005 . . . 690
65.42 Winter tyres for Passat W8 . . . 691
65.43 Winter tyres for Passat Protect . . . 691
65.44 Winter tyres for Passat saloon from model year 2006 . . . 691
65.45 Winter tyres for Passat saloon BlueMotion from model year 2008 . . . 692
65.46 Winter tyres for Passat Variant from model year 2006 . . . 692
65.47 Winter tyres for Passat Variant BlueMotion from model year 2008 . . . 693
65.48 Winter tyres for Passat R36 from model year 2008 . . . 693
65.49 Winter tyres for Sharan from model year 1996 . . . 694
65.50 Winter tyres for Sharan BlueMotion from model year 2009 . . . 694
65.51 Winter tyres for Touareg model year 2003 to model year 2010 . . . 694
65.52 Winter tyres for Touareg R50 model year 2008 to model year 2010 . . . 694

Protected by copyright. Copying for private or commercial purposes, in part or in whole, is not permitted unless authorised by Volkswagen AG. Volkswagen AG does not guarantee or accept any liability with respect to the correctness of information in this document. Copyright by Volkswagen AG.

sateletronica

44 – Wheels, tyres, vehicle geometry

1 General notes on wheels and tyres (passenger cars)

(VRL006749; Edition 05.2014)

This information is intended to help you form an opinion as precise and accurate as possible in cases of tyre damage and other complaints.

In this chapter you will learn more about tyres and wheels/rims.

Tyres are high-tech products that are especially adapted to the requirements of modern vehicles.

As with all highly developed technical products, tyres require proper care, maintenance and service. This is essential to ensure safety, performance and comfort for the entire service life of the tyre.

Tyres are constantly being further developed. Quality tyres are the result of modern design methods and production processes, as well as continuous quality checks. All tyres that are recommended by VW have been tested by the technical development department and have been designed specifically for each model in collaboration with the tyre manufacturers.

We therefore recommend fitting only the recommended tyre makes when renewing tyres.

Vehicle safety is the top priority. With regard to the various operating conditions such as

- differing speed ranges,
- winter and summer use and
- wet and dry roads,

the optimal compromise for vehicle safety must be found.

Every tyre is subjected to a wide range of different driving conditions over its entire service life. It is therefore important that the basic requirements for ensuring optimal tyre performance are met.

Proper adjustment of the axle geometry during wheel alignment is an important prerequisite for ensuring the maximum service life of the tyre. The wheel alignment must always be within the specified tolerance range.

Information for wheel alignment ⇒ Running gear, axles, steering; Rep. gr. 44 .

Note

Tyre damage and related problems can have various causes. It is therefore very important that one determines whether the problem has been caused by the tyre or by other components.

Normal wear and tear on a tyre will alter its characteristics. Rolling noises or rough running can be the result of such wear. These are simply the symptoms of normal wear and tear and do not constitute damage in the sense of the tyre being defective. You can take measures to eliminate the symptoms at least to some degree. However, in some cases it may not be possible to eliminate tyre noise completely.

satelettronica

Special models

Special models are only partly represented in the tables in Appendix 2 for parts certificate. Modification of these vehicles depends on the engine capacity of the basic model.

Protected by copyright. Copying for private or commercial purposes, in part or in whole, is not permitted unless authorised by Volkswagen AG. Volkswagen AG does not guarantee or accept any liability with respect to the correctness of information in this document. Copyright by Volkswagen AG.

satelettronica

2 Legislative and technical conditions for converting wheel and tyre combinations

2.1 Legislative conditions for converting wheel and tyre combinations

The manufacturer is issued with a general operating permit (GTA in accordance with § 20 StVZO (German road traffic and licensing regulations) and EU operating permit) for the overall vehicle with all parts for specific conversions.

Conversions of wheels and tyres can only be carried out under certain conditions. When doing this, the following points must be observed:

- If the size of wheel and tyre, with an indication of the load index and the speed symbol, is included in the vehicle GTA and EU operating permit/type approval ⇒ page 7 , this wheel and tyre combination can be fitted on the vehicle without any problem.

It is not necessary for the wheel and tyre combination specified in the registration certificate part I (certificate of registration) to be fitted. All combinations approved in the vehicle GTA or EU operating permit/type approval ⇒ page 7 may be fitted to the vehicle.

- For the conversions recommended by VOLKSWAGEN AG (see appendix to parts certificate) there are no general operating permits in accordance with § 22 StVZO (German road traffic and licensing regulations).
- Unless the wheels and/or tyres are included in the relevant vehicle GTA or EU operating permit/type approval, the vehicle will no longer meet the requirements of the road traffic regulations if converted.

These versions are based on the conditions valid in the European Union and no guarantee can be provided for their completeness. In some cases there are different legislative requirements outside the European Union.

The table included in the appendix for parts certificate shows the VOLKSWAGEN AG recommended and TÜV NORD Mobilität GmbH & Co. KG tested wheel and tyre combinations on VW vehicles and also the conditions to be observed for fitting. The use of genuine disc-type wheels on a vehicle to which they have not been allocated is not permissible.

The list of possible conversions deals with combinations that meet the requirements of VOLKSWAGEN AG with regards to road handling and road safety. They are the result of practical trials and are therefore recommended by VOLKSWAGEN AG.

Refer also to the new vehicle registration documents that were issued from 01.10.2005 ⇒ page 6 .

2.2 Technical conditions for converting wheel and tyre combinations

- The wheel and tyre combinations and conversions listed in the tables of the individual vehicles refer exclusively to Volkswagen genuine disc-type wheels.

Protected by copyright. Copying for private or commercial purposes, in part or in whole, is not permitted unless authorised by Volkswagen AG. Volkswagen AG does not guarantee or accept any liability with respect to the correctness of information in this document. Copyright by Volkswagen AG.
satelettronica

- Approval of wheel and tyre combinations or a change to wheels from the accessories trade is not possible with the parts certificate attached here.
- Tubeless radial tyres may only be fitted to rims with a safety hump feature on the shoulder.
- Tyres with run-flat properties (reinforced side walls) may only be used on disc-type wheels with an extended hump and on vehicles with a tyre pressure monitoring system ⇒ page 56 .
- If the wheel and tyre combinations listed are used, the associated tyre inflation pressures must be adhered to. The tyre inflation pressures for summer tyres can be found on the sticker on the inside of the tank flap or in the tables of the individual vehicles.
- Sufficient clearance to the wheels and tyres at parts of the wheel housing, suspension and braking system is assured if the notes and specifications established in the parts certificate are observed in all operating conditions.
- Unless otherwise stated, snow chains may only be fitted to the drive wheels. On all-wheel drive vehicles, however, only the front wheels may be fitted with snow chains.

2.3 Additional wheel housing extensions (flaps)

For technical reasons some vehicles require wheel housing extensions (flaps) on the wing or bumper -arrows- when using certain wheel and tyre combinations.

Please check if there is a requirement to remove the flaps.

The information is located in the overview table for the respective vehicle.

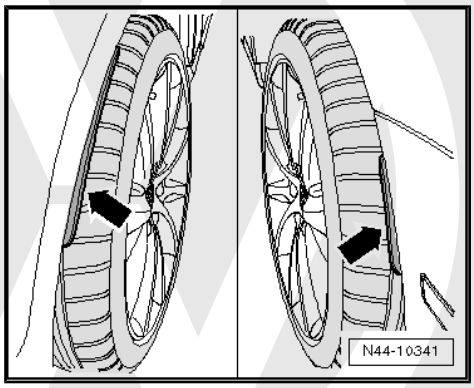

2.4 “Series 80” tyres

Tyres of the “80” series (e.g. 145/80 R 13 74 S) will replace the “82” series (e.g. 145/82 R 13 74 S). Lawmakers have stipulated that “82” series tyres may be replaced by “80” series tyres without having been entered in the vehicle documents.

The condition for this is that the “80” series tyres have the same width, be of the same type – cross-ply or radial belted – and have the same or higher load index.

If only “80” series tyres are entered in the vehicle documents, “82” series tyres may only be used if an entry has been made in the vehicle documents.

2.5 Vehicles with Plus running gear

The Plus running gear differs from the basic running gear in the following components:

- Suspension link
- Swivel joint
- Wheel bearing housing
- Anti-roll bar with coupling rod (not on Passat)

Protected by copyright. Copyright by Volkswagen AG. Volkswagen AG does not guarantee or accept any liability with respect to the correctness of information in this document. Copyright by Volkswagen AG.
satelettronica

- Drive shaft
- Wheel hub
- Brake disc
- Brake caliper
- Wheel rim

One of the identifying features of the Plus running gear is the connection between the swivel joint and the wheel bearing housing.

A - Connection between swivel joint and wheel bearing housing on basic running gear

B - Connection between swivel joint and wheel bearing housing on Plus running gear

The 5 wheel bolts on each wheel are the most visible identifying feature. The Passat VR6 to 09.93 is an exception. From 06.91, this vehicle was produced with 5 wheel bolts, but was gradually equipped with the Plus running gear from 02.92.

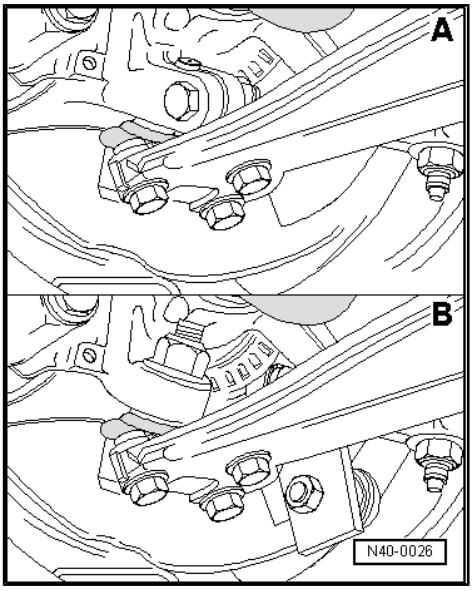

Overview - vehicles with Plus running gear

Model	Model year	Engine
Golf GTI	From 1992	85 kW
Golf GTI 16V	From 1993	110 kW
Golf VR6	From 1992	128 kW
Golf VR6 Syncro	From 1994	140 kW
Vento GT	From 1992	85 kW
Vento VR6	From 1992	128 kW
Passat 16V	From 1994	110 kW
Passat VR6	From 1994	128 kW
Passat VR6 Syncro	From 1994	135 kW

satelettronica
Protected by copyright. Copying for private or commercial purposes, in part or in whole, is not permitted unless authorised by Volkswagen AG. Volkswagen AG does not guarantee or accept any liability with respect to the correctness of information in this document. Copyright by Volkswagen AG.

3 Documents and codes/designations

3.1 New vehicle registration documents since 01.10.2005

The implementation of EU Directive 1999/37/EU "Registration Documents for Vehicles" in national law and legal requirements for data protection have necessitated the introduction of new, falsification-proof registration documents.

Since 01.10.2005, only the new documents are issued by the registration authorities in the event of new registrations, change of ownership, registration of technical modifications and all other matters.

The new registration documents are comprised of:

- Registration certificate part I, which replaces the certificate of registration and
- Registration certificate part II, which replaces the vehicle log book.

Registration certificate part I (certificate of registration)

- Contains all vehicle technical data which must be available to register a vehicle in Europe; however, only one wheel and tyre combination approved as standard is specified
- Contains the EU-wide, standardised, alphanumerical codes assigned to the technical data, so that the German registration certificate can be converted without problems into the registration document prescribed in non-member European countries for registration there
- Contains a field for documenting temporary or final immobilisation of the vehicle, and is therefore no longer withdrawn in the event of temporary or final immobilisation

Registration certificate part II (vehicle log book)

- Contains the note that the holder of the registration certificate is not identified as the owner
- Contains only the current and, if applicable, the last vehicle owner; the actual number of previous owners is shown numerically
- Contains only a small percentage of the technical vehicle data
- No longer serves to document temporary vehicle deregistration. The vehicle and body type specified under number 1 in the old vehicle documents will not exist in the future. In the new documents, this will be replaced by standardised EU vehicle classes with body type

Introduction of the new registration documents will lead to barely any changes for the vehicle operator.

Like the old certificate of registration, the registration certificate part I (certificate of registration) must be kept in the vehicle and submitted to responsible persons on request.

It is not necessary for the wheel and tyre combination specified in the registration certificate part I (certificate of registration) to be fitted. All combinations approved according to the general vehicle type approval or EU type approval ⇒ page 7 may be fitted.

The validity of a wheel and tyre combination which deviates from the general vehicle type approval or EU type approval must still be verified via an entry in the registration certificate part I (certificate of registration), an installation certificate based on a part

Protected by Copyright. Copyright by Volkswagen AG. Volkswagen AG does not guarantee or accept any liability with respect to the correctness of information in this document. Copyright by Volkswagen AG. Unauthorised use or publication, in part or in whole, is not permitted and authorised by Volkswagen AG.
satelettronica

certificate or general type approval for the wheel and tyre combination.

3.2 COC document (EEC Certificate of Conformity)

Manufactures of motorized vehicles must apply for an EU operating permit for all class M1 passenger carrying vehicles.

A certificate is produced on the basis of this operating permit - the COC (Certificate of Conformity).

This document certifies that the vehicle complies with the EU operating permit (EU type approval) and can be registered in every EU country without an individual type approval.

The document will be issued for all vehicles that comply with the EU operating permit.

These vehicles have an EU type plate (black sticker) in the area of the driver's door, or in the case of older vehicles, in the engine compartment.

The COC document has the same value as the registration document and therefore the original should not be carried on the vehicle.

The COC document contains the EU general type approval number and detailed technical information on the vehicle such as emissions classification and all the permitted wheel and tyre combinations.

3.3 Official type designations

Passenger cars licensed for road use in Germany need a general type approval for the issue of a vehicle title document.

The type approval is issued by the Federal Ministry for Transport in Flensburg following type inspection. This procedure was permitted until 31.12.1997 and, in exceptional cases, even after that.

Other member states of the European Union (EU) have different procedures for issuing a document similar to the German title document. Until 31.12.1997, each member state was entitled to issue its own national type approvals according to its own procedures.

Since 1.1.1998, all passenger cars licensed within the European Union must have a type approval corresponding to EU guidelines. Vehicles licensed for road use with single-vehicle approval according to § 21 StVZO in Germany are excepted.

This means the same guidelines apply to all vehicle manufacturers. This makes it easier to trade across national borders within the EU.

Official type approval, sales or trade designation

In the following table, all VW vehicles which already have EU type approval are listed in the column "EU type".

All VW vehicles which were granted type approval according to the procedure valid up to 31.12.97 are listed in the column "General type approval (GTA)"

If entries appear in both columns "General type approval (GTA)" and "EU type", there exist vehicles of this model which are approved according to both the StVZO and the EU guidelines. In this case, one must first establish what sort of vehicle one has. There are two possibilities:

1. possibility

The last page of the vehicle title includes the field “Certified holder of a general type approval/EEC type approval”. Either the general

Copyright by Volkswagen AG. Volkswagen AG does not guarantee or accept any liability with respect to the correctness of information in this document. Copyright by Volkswagen AG. Protected by copyright. Copying for private or commercial purposes, in part or in whole, is not permitted unless authorised by Volkswagen AG.
satelettronica

type approval number of the EU type approval number is entered here, assuming it is the original vehicle title document. This is the case only if the vehicle was not deregistered in the past for longer than 12 months.

2. possibility

Check whether the general type approval number or the EU type approval number is entered on the vehicle identification plate.

Official type designation for vehicles with		Sales or trade designation
GTA type	**EU type**	
-	6E	Lupo 3L, Lupo FSI
-	6ES	Lupo GTI
-	6X	Lupo 1999 >
6N	6N	Polo 1995 > (A03)
-	6KV	Polo Classic 1996 > (A13); Polo Variant 1998 > (A23)
-	9N	Polo 2002 >; Polo Fun 2004 >; Cross Polo 2006 > (A04)
1HX0	1H	Golf 1992 > (A3)
1HX0	1H	Golf Variant (A3)
1HX0	1H	Vento (A3)
1HX1	1H	Golf Syncro (A3)
1HX1	1H	Golf Syncro Variant (A3)
1EX0	1E	Golf Cabriolet (A3)
-	1J	Golf 1998 >, Golf 4Motion (A4)
-	1J	Golf Variant 1999 >
-	1J	Bora 1999 >, Bora 4Motion
-	1J	Bora Variant 1999 >
-	1K	Golf 2004 >
-	1KP	Golf Plus 2005 >; Cross Golf 2007 >
-	9C	New Beetle 1999 >
-	1Y	New Beetle Cabriolet 2003 >
-	9CR	New Beetle RSi 2001 >
35I	-	Passat 1994 >
35I	-	Passat Variant 1994 >
-	3B	Passat/Passat Variant 1997 >
-	3B	Passat/ Passat Variant 4Motion 1997 >
-	3BG	Passat/Passat Variant 2001 >
-	3BG	Passat/ Passat Variant 4Motion 2001 >
-	3BS	Passat/Passat Variant W8 4Motion 2002 >
-	3BL	Passat Protect 2002 >
7M	7M	Sharan, Sharan Syncro 1996 >
7L	7L	Touareg 2003 >

3.4 EU general type approval number, sales type and sales or trade designation

Since 1.1.1998, all passenger cars licensed within the European Union must have a type approval corresponding to EU guidelines. Vehicles licensed for road use with single-vehicle approval according to § 21 StVZO in Germany are excepted.

satelettronica
Protected by copyright. Copyright by Volkswagen AG. Volkswagen AG does not guarantee or accept any liability with respect to the correctness of information in this document. Copyright by Volkswagen AG.

This means the same guidelines apply to all vehicle manufacturers. This makes it easier to trade across national borders within the EU.

The COC document contains the EU general type approval number and detailed technical information on the vehicle such as emissions classification and all the permitted wheel and tyre combinations ⇒ page 7 .

EU general type approval model code (type approval model code)	Sales type	Sales or trade designation
5Z	5Z	Fox 2005 >
3C	3C	Passat 2006 >
1KM	1KM	Jetta 2006 >
1KM	1KM	Golf Variant 2007 >

Protected by copyright. Copying for private or commercial purposes, in part or in whole, is not permitted unless authorised by Volkswagen AG. Volkswagen AG does not guarantee or accept any liability with respect to the correctness of information in this document. Copyright by Volkswagen AG.

satelettronica

4 Useful information regarding tyres

4.1 Identification markings on the tyre sidewall

Example: Continental ContiPremiumContact 2

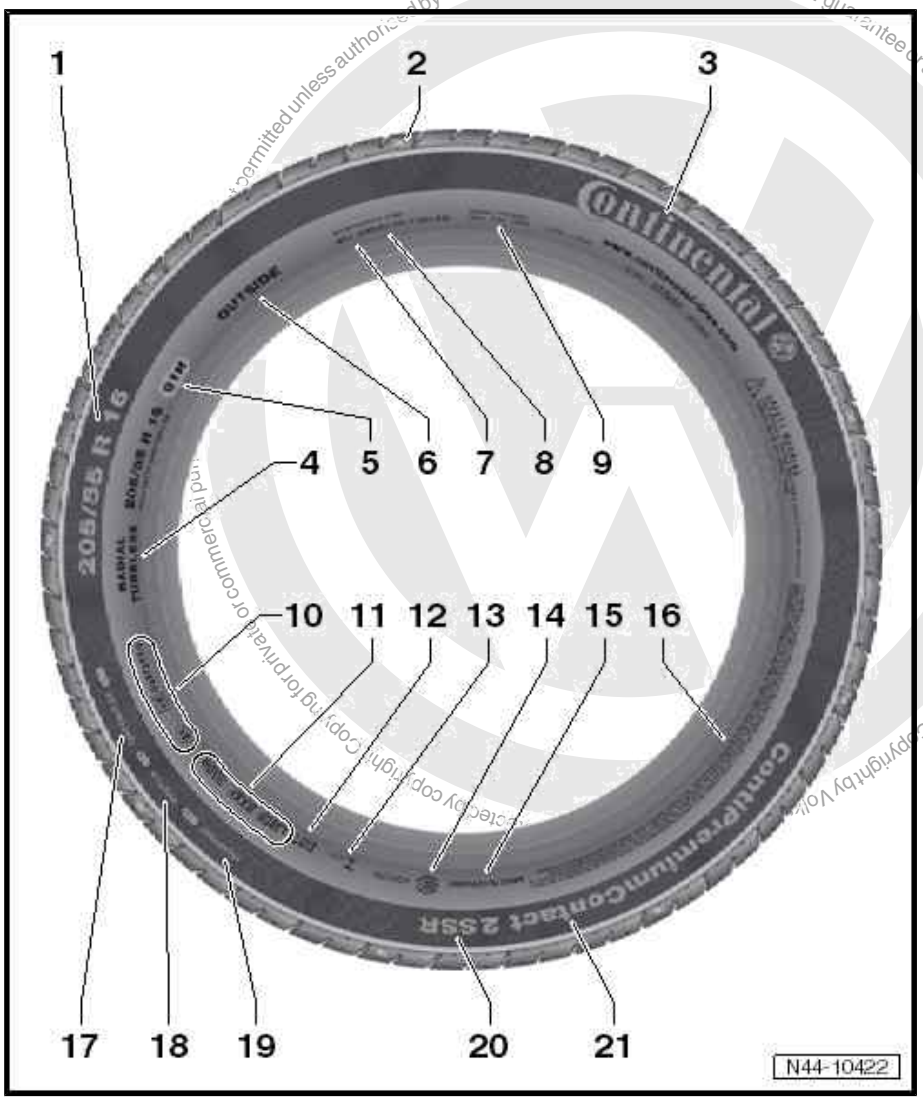

1 - Size code

- ❑ e.g. 205/55 R 16 ⇒ page 11

2 - Position of TWIs (Tread Wear Indicators)

3 - Manufacturer (trade name)

4 - Construction

- ❑ Radial - radial cord direction in carcass
- ❑ Tubeless - code for tubeless tyres

5 - Load capacity index / speed rating

- ❑ e.g. 91 ⇒ page 12
- ❑ e.g. H ⇒ page 11

6 - Specified direction of rotation/installation for tyre

7 - Maximum permissible load

- ❑ Data for North America

8 - Maximum permissible tyre pressure

- ❑ Data for North America

9 - Number of plies in the centre of the tread and in the sidewalls as well as information about the material

10 - E number = Approval number

- ❑ Tyre fulfils European guidelines

11 - Manufacturer code / date of manufacture

- ❑ Identification number for manufacturer's plant, tyre size and tyre model
- ❑ Tyre ageing / date of manufacture ⇒ page 14

12 - DOT - Department of Transportation

- ❑ Tyre fulfils standards of the Department of Transportation of the United States of America

13 - Marking for Brazil

14 - Marking for China

15 - Country of origin

- ❑ e.g. manufactured in Germany (Made in Germany)

16 - Safety notes for use or fitting of tyre

17 - Relative expected service life - abrasion resistance

- ❑ based on a US standard test

Copyright by Volkswagen AG. Volkswagen AG does not guarantee or accept any liability with respect to the correctness of information in this document. Copying for private or commercial purposes, in part or in whole, is not permitted unless authorised by Volkswagen AG.
satelettronica

18 - Rating of wet-braking traction, A, B or C

- ❑ According to a US test

19 - Rating of temperature resistance, A, B or C

- ❑ According to a US test

20 - Identifying tyres with run-flat properties

- ❑ e.g. self-supporting run-flat
- ❑ Identifying tyres with run-flat properties ⇒ page 56

21 - Tread pattern

- ❑ e.g. ContiPremiumContact

4.2 Explanation of tyre markings

Explanation of tyre dimensions

Tyres	Speed	1	2	3	4	5	6	7
Summer tyres	to 240 km/h	195	65	R	15	91	V	-
Winter tyres	to 160 km/h	195	65	R	15	91	Q	M + S
Winter tyres	to 190 km/h	195	65	R	15	91	T	M + S
High-speed tyres	faster than 240 km/h	225	50	ZR	16	91	-	-

1 - Tyre width

2 - Aspect ratio in %

3 - Code for tyre construction “R” indicates radial

4 - Rim diameter designation

5 - Load rating code/load index (LI)

6 - Speed rating code

7 - Winter tyre/code for all-season tyre

Speed rating / maximum speed

Speed rating code	Maximum speed in km/h
L	120
M	130
N	140
P	150
Q	160
R	170
S	180
T	190
U	200
H	210
V	240
ZR	above 240
W	270
Y	300

Protected by copyright. Copyright by Volkswagen AG. Copyrighted by Volkswagen AG. Volkswagen AG does not guarantee or accept any liability with respect to the correctness of information in this document. Copying for private or commercial purposes, in part or in whole, is not permitted unless authorised by Volkswagen AG.
satelettronica

Load rating code / load index (LI)

The load rating can be found on the sidewall of the tyre. It provides information about the maximum load that the tyre can bear.

The load rating is included in the size designation of the tyre (e.g. 195/65 R 15 91T). It is indicated on the tyre as a code according to ETRTO. The following table shows the load rating codes used at VW with the corresponding load capacity of the tyres.

Load rating code	Maximum load of tyre in kg
75	387
78	425
79	437
80	450
81	462
82	475
83	487
84	500
85	515
86	530
87	545
88	560
89	580
90	600
91	615
92	630
93	650
94	670
95	690
96	710
97	730
98	750
99	775
100	800
101	825
102	850
103	875
104	900
110	1060
112	1120

Protected by copyright. Copying for private or commercial purposes, in part or in whole, is not permitted unless authorised by Volkswagen AG. Volkswagen AG does not guarantee or accept any liability with respect to the correctness of information in this document. Copyright by Volkswagen AG.

satelettronica

4.3 Speed ratings for tyres

The speed rating (e.g. “T”) following the size of the tyre (e.g. 185/65 R 14 86T)) indicates the maximum permitted speed (v_{max}) of the tyre.

The tyres for the vehicle must be selected so that their maximum permitted speed is greater than the maximum speed that the vehicle (“based on model”) can attain.

Vehicles with national type approval

If the vehicle has a national type approval, the maximum speed for the vehicle is calculated as follows:

Formula for vehicles with v_{max} up to 150 km/h

v_{max} = 1.03 x v + 3.5 km/h ⇒ page 13

Example: Specified maximum speed v = 145 km/h

v_{max} = 1.03 x 145 km/h + 3.5 km/h = 152.85 km/h

In this example, a tyre with the speed rating “Q” or higher must be used.

Formula for vehicles with v_{max} above 151 km/h

v_{max} = 1.01 x v + 6.5 km/h ⇒ page 13

Example: Specified maximum speed v = 163 km/h

v_{max} = 1.01 x 163 km/h + 6.5 km/h = 171.13 km/h

In this example, a tyre with the speed rating “S” or higher must be used.

Vehicles with EC type approval

If your vehicle has an EC type approval, the maximum speed for all vehicles is calculated as follows:

v_{max} = 1.05 x v ⇒ page 13

Example: Specified maximum speed v = 172 km/h

v_{max} = 1.05 x 172 km/h 180.60 km/h

In this example, a tyre with the speed rating “T” or higher must be used.

It is permitted to use tyres with a higher speed rating. The same applies to tyres with a higher load index.

Note

For the letter “v”, enter the maximum speed given in field “T” of part I or II of the registration document or under number 6 of the vehicle documentation. This calculation is necessary because all vehicles, for technical reasons, achieve different maximum speeds within a legally permitted tolerance.

4.4 Undulations

Radial depressions are slight concavities in the tyre sidewall.

They run from the bead towards the shoulder of the tyre. These parts appear in the figure ⇒ page 42 .

The cause is the accumulation of material at the joints of the tyre components.

Undulations have no effect on:

- Safety,
- Service life,
- Handling or
- Other characteristics of the tyre.

Undulations are visible to varying extents. It is not necessary to inspect the tyre or remove it from the rim.

Protected by copyright. Copying for private or commercial purposes, in part or in whole, is not permitted unless authorised by Volkswagen AG. Volkswagen AG does not guarantee or accept any liability with respect to the correctness of information in this document. Copyright by Volkswagen AG.
satelettronica

What causes undulations?

Modern steel belted tyres are constructed with single-ply side walls to save weight.

The sidewall components consist of long strips before they are joined together to form a tyre. They must overlap at the joints. Consequently, slight irregularities or waves are created in the area of the overlapping parts. The overlaps are easier to see from the outside due to the single-ply construction.

4.5 Tyre storage

Storage room

The conditions have to be:

- dark
- dry,
- cool and
- ventilated

in the tyre storage room.

> ⚠ WARNING
>
> *Stored tyres must not come in contact with fuel, oil, grease or chemicals under any circumstances. Otherwise, the material in the tyre will be damaged by chemical reactions which are not always visible.*
>
> *As a result, dangerous situations can occur when the car is driven.*

Of course, tyre damage occurs only if the tyre is in contact with the chemical for a relatively long time. If a few drops of fuel land on a tyre during a fill up, this is of no concern.

Storing the tyres

Complete wheels

Tyres mounted on wheels can be stored flat, stacked one upon the other. In this case, it is important to ensure that the tyres are clean and dry. The inflation pressure should be increased to a maximum of 3 bar.

Tyres without wheels

Tyres without wheels are best stored standing vertically. If tyres are stacked for a long period of time, they will be pressed together quite considerably. The tyres will then be more difficult to fit, as they do not sit on the rim shoulders. If tyres are stored standing vertically, it is recommended to turn them every 14 days to avoid flat spots.

4.6 Tyre ageing

Tyres age as a result of physical and chemical processes, which can impair the function of the tyres. Tyres which are stored for longer periods of time harden and become brittle faster than tyres which are constantly in use on a vehicle. Older tyres may develop hairline cracks as a result of ageing. When tyres are in regular use, the constant flexing activates softeners in the rubber, preventing hardening and the development of cracks.

It is therefore important to take into account not only the tread depth, but also the age of spare tyres, stored tyres and tyres which are not permanently in use. The tyre age can be determined from

Protected by copyright. Copyright by Volkswagen AG. Volkswagen AG does not guarantee or accept any liability with respect to the correctness of information in this document. Copyright by Volkswagen AG.
Commercial use or distribution of the data is not permitted unless authorised by Volkswagen AG.
satelettronica

in the DOT designation, which includes the production date of the tyre.

Example of a DOT number to 31.12.1999

DOT	5 0	9	< Stands for 199_
		Last digit is production year	
	Week		

In this example, the production date is the 50th week of 1999.

Example of a DOT number from 01.01.2000

DOT	0 1	0 0 Last 2 digits is production year
	Week	

In this example, the production date is the 1st week of 2000.

Recommendation

- It is recommended not to use summer and winter tyres which are older than 6 years anymore. The original properties deteriorate due to the aging process. Winter tyres especially lose their adhesion properties.
- When new tyres are fitted, the spare tyre may also be used if it is in flawless condition and is not more than 6 years old. The age of the tyre has a great influence on the high-speed capability of the tyre. It is possible to combine a spare tyre which is several years old with new tyres; however, this can have an adverse influence on car handling.
- Tyres are constantly being further developed, which can lead, for example, to slight changes in the rubber compound, even if the tyres are of the same make, size and tread pattern.
- All VW vehicles are factory-fitted with four identical tyres and wheels.

Front-wheel drive vehicles:

- For reasons of safety, tyres of the same make and with the same tread pattern should be mounted on one axle.

Four-wheel drive vehicles:

- Vehicles with four-wheel drive must always be equipped with four wheels with tyres of the same size, construction, tread pattern and make.

Renewing tyres

Tyres must always be renewed when:

- the legal minimum tread depth of 1.6 mm is reached,
- there is visible mechanical damage

4.7 Winter tyres

Use of winter tyres

As of 01.05.2006, a change to the German road traffic regulations (StVO) came into force which caused the following supplement to be made: "The equipment in motor vehicles has to be adapted to the weather conditions. In particular, this includes suitable tyres and antifreeze in the windscreen washing system."

Protected by copyright. Copyright by Volkswagen AG. Volkswagen AG does not guarantee or accept any liability with respect to the correctness of information in this document. Copyright by Volkswagen AG.
satelettronica

Please point out to customers that, since May 1st 2006, they are legally obliged to adapt their vehicle's equipment, particularly the tyres, to winter weather conditions.

For driving in winter, we recommend that the vehicle be equipped with winter tyres in the sizes recommended in table 2 of the parts certificates.

As a basic rule:

All tyre sizes listed in the vehicle documents can also be used as winter tyres.

The handling characteristics may be affected by the use of winter tyres and the possible change in the dimensions of the wheel and tyre. Therefore, when using winter tyres, you must adapt your speed to the changed handling characteristics and to the road conditions.

To achieve the best possible handling, winter tyres must be fitted on all wheels.

If the vehicle is equipped with rims other than the factory-fitted rims, you must take the following into consideration when you fit winter tyres:

- Wheels and wheel bolts are matched.
- Whenever the wheels are changed, corresponding wheel bolts of the correct length and with the correctly shaped tapered seats are used [1]. The secure fit of the wheels and the functioning of the brakes depends this.
- The suitability of winter tyres with less than 4…5 mm tread depth for winter operation is limited.
- Some countries require winter tyres to have a tread depth of at least 4 mm.
- We recommend that winter tyres be replaced after no more than six years. The special “winter properties” of these tyres decline with age, regardless of how much they are used.

Vehicles with tyre pressure control

On vehicles with tyre pressure control, the tyre inflation pressure has to be resaved or matched when changing over between summer and winter tyres ⇒ Workshop manual - Running gear - for relevant model .

1) A spherical cap is the curved surface of a section of a sphere cut by a plane. The tapered seats on the wheel bolt and in the wheel (rim) in the wheel bolt holes are spherical caps.

4.8 Winter tyres with speed symbol “V”

The tyre industry now supplies winter tyres with speed symbol "V". But only under certain conditions may these tyres be used up to the maximum permitted speed v_{max} = 240 km/h.

Vehicles with V tyres

Vehicles requiring V tyres according to the vehicle's title document can use winter tyres with speed symbol V without restriction at speeds up to v_{max} =240 km/h.

Vehicles with W, Y or ZR tyres:

Under certain circumstances, vehicles requiring W, Y or ZR tyres according to the vehicle's title document may not be driven at speeds of v_{max} = 240 km/h.

Why?

V summer tyres and V winter tyres without special identification ⇒ page 17 have 100 % of their maximum load capacity (as

Protected by copyright. Copying for private or commercial purposes, in part or in whole, is not permitted unless authorised by Volkswagen AG. Volkswagen AG does not guarantee or accept any liability with respect to the correctness of information in this document. Copyright by Volkswagen AG.
satelettronica

specified by their load index “LI”) ⇒ page 17 only up to speeds of 210 km/h.

Travelling at over 210 km/h is possible with V winter tyres only if the maximum load of the tyres is not exceeded. The load capacity of the tyres decreases as the speed increases.

The maximum permitted axle load and the maximum achievable speed of some VW vehicles are so high that the load capacity of the V tyres is not sufficient for speeds of up to 240 km/h.

example: Tyre 205/55 R 16 91V

The load index (LI) 91 certifies that this tyre has a load capacity of 615 kg per tyre at up to 210 km/h.

At a speed of 240 km/h, this tyre can carry a load of only 560 kg, i.e. the axle load may not exceed 1120 kg.

The Passat Variant V6 4Motion has a permitted axle load of 1150 kg and an achievable maximum speed of 232 km/h. This vehicle may only travel at speeds of up to 230 km/h with V winter tyres.

This applies to all V winter tyres without special markings.

4.9 Extra Load (XL) V winter tyres

V winter tyres marked XL have a higher load capacity than V winter tyres without this code.

XL V winter tyres allow a higher speed, but this does not mean that the top speed of a V tyre is 240 km/h for every VW car.

The same conditions apply to these tyres as to V winter tyres without a special code!

Tyre pressure for Extra Load V tyres

The following table ⇒ page 17 shows how fast VW cars may drive with V winter tyres, depending on their respective axle load.

4.10 Maximum speeds for V and Extra Load (XL) winter tyres

Vehicle	Version	Type of drivetrain	Max. axle load	Winter tyres	v_{max} with V winter tyres
Passat 1994 > 2.8l/135 kW VR6	Variant	Syncro	1,060 kg	205/50 R 15 86V	210 km/h
Passat 1994 > 2.8l/128 kW VR6	Saloon	Front-wheel drive	1,020 kg	205/50 R 15 86V	220 km/h
Passat 1994 > 2.8l/128 kW VR6	Variant	Front-wheel drive	1,020 kg	205/50 R 15 86V	220 km/h
Passat 1997 > 2.5l/110 kW TDI	Saloon	4Motion	1,190 kg	205/55 R 16 91V	220 km/h
Passat 1997 > 2.8l/142 kW V6	Saloon	4Motion	1,130 kg	205/55 R 16 91V	235 km/h
Passat 1997 > 2.8l/142 kW V6	Variant	4Motion	1,150 kg	205/55 R 16 91V	230 km/h
Passat 2001 > 2.8l/142 kW V6	Saloon	4Motion	1,190 kg	205/55 R 16 91V	240 km/h
Passat 2001 > 2.8l/142 kW V6	Saloon	4Motion Automatic	1,140 kg	205/55 R 16 91V	230 km/h
Passat 2001 > 2.8l/142 kW V6	Variant	4Motion	1,140 kg	205/55 R 16 91V	230 km/h
Passat 2001 > 2.8l/142 kW V6	Variant	4Motion Automatic	1,150 kg	205/55 R 16 91V	230 km/h
Passat W8	Saloon	4Motion Manual gearbox	1,180 kg	205/50 R 17 93V extra load	240 km/h

Copyright by Volkswagen AG. Volkswagen AG does not guarantee or accept any liability with respect to the correctness of information in this document. Copyright by Volkswagen AG. Volkswagen AG does not guarantee or accept any liability with respect to the correctness of information in this document. Copyright by Volkswagen AG. Volkswagen AG does not guarantee or accept any liability with respect to the correctness of information in this document. Copyright by Volkswagen AG.

satelettronica

Vehicle	Version	Type of drivetrain	Max. axle load	Winter tyres	v_{max} with V winter tyres
Passat W8	Saloon	4Motion Automatic	1,230 kg	205/50 R 17 93V extra load	225 km/h
Passat W8	Variant	4Motion Manual gearbox	1,180 kg	205/50 R 17 93V extra load	240 km/h
Passat W8	Variant	4Motion Automatic	1,230 kg	205/50 R 17 93V extra load	225 km/h
Passat Protect 2.8l/142 kW V6	Saloon	4Motion Manual gearbox	1,260 kg	205/55 R 16 94V extra load	225 km/h
Passat Protect 4.0l/202 kW W8	Saloon	4Motion Automatic	1,340 kg	205/55 R 16 94V extra load	210 km/h
Sharan 2001 > 2.8l/150 kW VR6	Saloon	Front-wheel drive	1,280 kg	205/55 R 16 94V extra load	210 km/h
Sharan 2001 > 2.8l/150 kW VR6	Saloon	4Motion	1,330 kg	205/55 R 16 94V extra load	210 km/h

Registration regulations in the Federal Republic of Germany

Only when winter tyres are in use may the top speed that a vehicle can achieve be greater than the maximum speed specified by the speed symbol of the tyre.

In this case, a label stating the following must be attached:

Important! Winter tyres!
Maximum speed … km/h

Note

This label must be clearly visible to the driver!

Winter tyre inflation pressures

Tyre pressure information is located on the tyre pressure plate on the inside of the tank flap or on the driver side B-pillar.

4.11 Reinforced and Extra Load (XL) tyres

Some tyre manufacturers have for some time replaced the designation “Reinforced” with the designation “Extra Load”. This designation has long been standard in non-European countries. Technically, there is no difference between them.

Some tyre manufacturers also use the designation “XL” for Extra Load tyres.

Tyres with the designation “Reinforced” or “Extra Load (XL)” are of equal quality.

4.12 Snow chains

Snow chains must be fitted to driven wheels only.

On all-wheel drive vehicles, however, only the front wheels may be fitted with snow chains.

It is not possible to use snow chains with all wheel and tyre combinations. Notes on this can be found in the vehicle tables of the parts certificate.

If no particular type of snow chain is specified, then small-link chains may be used. These, including the chain fastener, may not

Protected by copyright. Copying for private or commercial purposes, in part or in whole, is not permitted unless authorised by Volkswagen AG. Volkswagen AG does not guarantee or accept any liability with respect to the correctness of information in this document. Copyright by Volkswagen AG.
satelettronica

protrude more than 15 mm beyond the wheel's tread and the inner wall.

On some models, only special, small-link chains are possible with certain wheel and tyre combinations. Notes on this can be found in the vehicle tables of the parts certificate.

The maximum speed permitted by law when driving with snow chains is 50 km/h.

Snow chains should be removed when there is no snow on the road. There is no point in having them on the wheels, as they adversely affect the vehicle's handling. It causes unnecessary stress on the tyres and above average wear on the chains.

Protected by copyright. Copying for private or commercial purposes, in part or in whole, is not permitted unless authorised by Volkswagen AG. Volkswagen AG does not guarantee or accept any liability with respect to the correctness of information in this document. Copyright by Volkswagen AG.

satelettronica

5 Tyre wear/ mileage for passenger car tyres

5.1 General

A tyre has to meet numerous requirements ⇒ page 20 .

Different types of tyres meet these requirements to varying degrees.

Depending on the conditions in which the tyres are used and on the type of vehicle, some requirements will be more important than others.

H, V, and Z tyres for “high-performance vehicles” are expected to have good grip on wet and flooded roads. However, mileage performance cannot be as good for tyres of this type as it is, for example, in the case of S or T tyres.

5.2 Requirements to be met by tyres

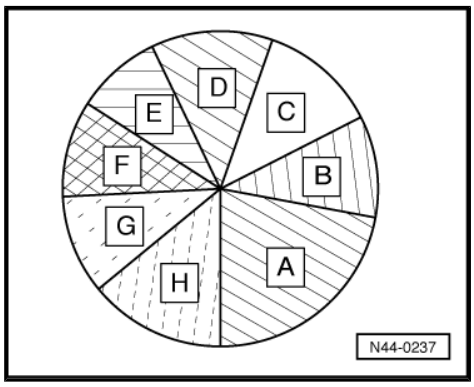

A - Wet braking properties

B - Driving comfort

C - Steering accuracy

D - Driving stability

E - Tyre weight

F - Life expectancy

G - Rolling resistance

H - Aquaplaning

The pie chart illustrates to what extent the tyre meets the various requirements. The tyre in this example (with its specific structure and rubber composition) would meet the requirements listed above (A to H) to the extent indicated by the size of the segments of the pie.

Improving one of the characteristics will have a negative effect on one of the others.

Example:

An improvement in wet braking properties -A- leads to a reduction in driving comfort -B-, rolling resistance -G- and life expectancy -F-.

The life expectancy of passenger vehicle tyres does not just depend on the rubber composition and design of a tyre. The conditions for use, the vehicle-specific circumstances and driving style have a heavy influence on the service life of a tyre.

Modern vehicles enable comfortable and economic driving, but also a more "sporty" driving style. A tyre life of 5,000 to 40,000 km or more is possible.

Note

The driving style is the most important influencing factor as regards the service life of a tyre.

Protected by copyright. Copyright by Volkswagen AG.
Copyright by Volkswagen AG. Volkswagen AG does not guarantee or accept any liability with respect to the correctness of information in this document. Copyright by Volkswagen AG. All rights reserved. No part of this document may be reproduced or transmitted in any form or by any means, electronic or mechanical, including photocopying, recording or by any information storage and retrieval system, unless authorized by Volkswagen AG.
satelettronica

5.3 Wear behaviour of high-speed tyres

These tyres are designed for very high speeds. When developing these tyres, good grip in wet conditions is the main objective. The tread compositions do not have the same wear resistance as T and H tyres for lower speeds.

The life expectancy of high-speed tyres is therefore considerably lower in comparable conditions of use.

5.4 Factors influencing the service life of a tyre

The following factors influence a tyre's service life to varying degrees.

Driving style:

- Speed ⇒ page 21
- Braking ⇒ page 21
- Acceleration ⇒ page 22
- Cornering ⇒ page 22

For more information about driving style: ⇒ page 21 .

Maintenance:

- Tyre pressure ⇒ page 22

For more information about maintenance: ⇒ page 22 .

Environment:

- Road surface
- Ambient temperature and climate

Vehicle:

- Weight
- Dynamic toe and camber settings

Tyre use:

- Speed range
- Wet or dry

Tyre type:

Winter or summer

5.5 Driving style

I. Steady driving without deceleration or acceleration

Example:

Speed (km/h)	Wheel slip	Wear
100	1	1
180	3	9

II. Braking (driving style)

Most wear is caused during braking.

Example: Braking from a speed of 50 km/h

Protected by copyright. Copyright by Volkswagen AG.
Volkswagen AG does not guarantee or accept any liability with respect to the correctness of information in this document.
Copyright by Volkswagen AG. Copyright for private or commercial purposes, in part or in whole, is not permitted unless authorised by Volkswagen AG.
satelettronica

Braking distance (m)	Deceleration (m/s²)[2]	Wheel slip	Wear
Vehicle allowed to roll to a stop		0	0
100	0.1 x g	4	1
50	0.2 x g	8	4
12.5	0.4 x g [3]	32	2000 - 3000

2) g = Freefall acceleration: 9.81 m/s²

3) A deceleration of 0.4 x g corresponds to heavy braking.

Protected by copyright. Copying for private or commercial purposes, in part or in whole, is not permitted unless authorised by Volkswagen AG. Volkswagen AG does not guarantee or accept any liability with respect to the correctness of information in this document. Copyright by Volkswagen AG.

III. Acceleration (driving style)

Slip caused when driving off gently is approximately the same as that caused when driving at a constant speed of 100 km/h.

Example:

	Wheel slip	Wear
Driving off gently	1 - 2	1
Driving off normally	7 - 8	5
Driving off with wheels spinning	20 or more	100 - 200

IV. Driving through curves (driving style)

A »sporty« driving style and driving at higher speeds also cause greater wear when driving through corners.

In practice, this means that wear is increased 16-fold when the cornering speed is doubled. This is the price that has to be paid for going faster.

Example: Driving through a curve with a radius of 150 m

Speed (km/h)	Lateral acceleration (m/s²)[4]	Wear
50	1 = 0.13 x g	1
80	2.5 = 0.33 x g	6.5
100	4 = 0.53 x g	16

4) g = gravitational acceleration: 9.81 m/s²

5.6 Tyre maintenance

Tyre pressure

The weight of the vehicle causes the tyre contact area to flatten. This in turn causes the running surface and the entire ply of the tyre to be continually deformed when a tyre is rolling. If the tyre is underinflated, the amount of flex is higher, resulting in a greater increase in heat and increased rolling resistance. This then leads to increased wear and poses a greater safety risk.

Example: Specified standard tyre pressure with cold tyres, according to vehicle load

Tyre pressure (bar)	Tyre pressure (%)	Tyre life (%)
2.3	100	100
1.9	80	85
1.4	60	60
1.0	40	25

satelettronica

If tyre pressure is too high, this will result in poor rolling comfort and increased wear across the centre of the tread. We recommend always to maintain the tyre pressure specified by the manufacturer.

Note

- *The diagrams shown are not applicable in all cases.*
- *They are intended merely to give an idea of the wear rates of tyres on the front and rear axles and with front-wheel drive and four-wheel drive.*
- *The tyre service life may differ significantly, depending on operating conditions and running gear.*

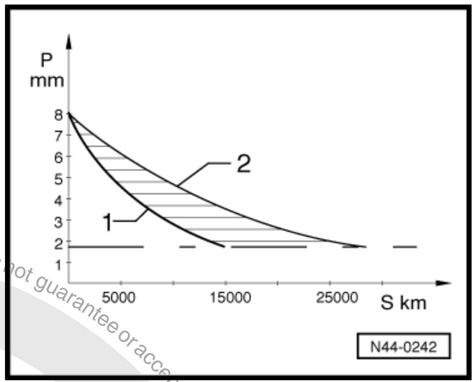

Diagram 1:

Tread depth versus tyre life for vehicles with front-wheel drive and V-rated tyres

P - Tread depth

S - Mileage covered

1 - Front axle

2 - Rear axle

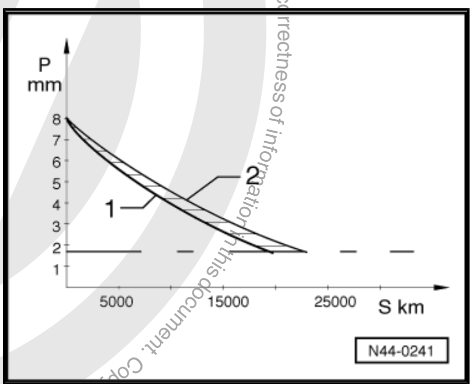

Diagram 2:

Tread depth over tyre service life for vehicles with four-wheel drive and V-rated tyres

P - Tread depth

S - Mileage covered

1 - Front axle

2 - Rear axle

Diagrams 1 and 2 show that the tread on a new tyre wears faster than that on a heavily used tyre. As the wear curve is not linear, it is not possible to estimate the tyre service life on the basis of wear after the first 5,000 km.

On front-wheel drive vehicles, the front tyres not only have to transmit the steering and driving forces, but also the greater part of the lateral and braking forces. This causes the front tyres on front-wheel drive vehicles to wear much faster than the rear tyres. Even tyre wear can be achieved by rotating (interchanging) the front and rear tyres on a regular basis. Rotating wheels ⇒ page 68 .

5.7 Evenly worn tyres

The requirements to be met by tyres are increasing continuously.

This is caused by the following factors:

- greater vehicle weight
- high speeds
- high level of vehicle safety

Greater loads on the tyre will, of course, lead to an increase in tyre wear.

Protected by copyright. Copying for private or commercial purposes, in part or in whole, is not permitted unless authorised by Volkswagen AG. Volkswagen AG does not guarantee or accept any liability with respect to the correctness of information in this document. Copyright by Volkswagen AG.
sateletronica

Driving style has a critical effect on tyre wear. For this reason, customer claims regarding tyre wear on evenly worn tyres are not covered by the warranty.

The effective service life of a tyre can be determined only when the remaining tread depth has reached 2 mm (see diagrams ⇒ page 23).

5.8 Measuring tread depth

Note

- *The tread depth is measured in the main tread channels.*
- *Do not measure at the TWIs (Tread Wear Indicators).*

Measure the tread depth in the main tread channel, at the points where the tyre is worn most heavily. The position of the TWIs can be seen at various points on the shoulder of the tyre ⇒ Item 2 (page 10) .

A “Δ” or the manufacturer's “logo” may appear in the place of “TWI”.

The bars of the TWI have a height of 1.6 mm. This is the minimum tread depth required by German law.

Different values may apply in other countries.

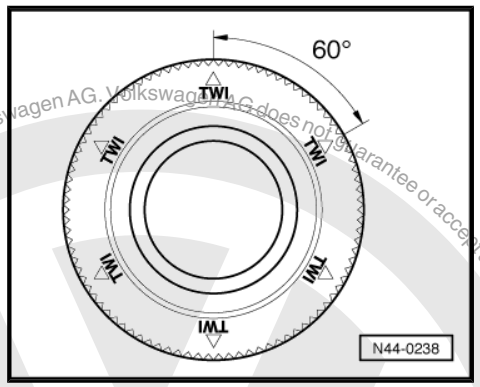

The TWIs must not be included in the measurement. Tread depth should always be measured at the deepest point of the tread channel.

A - TWIs in the main tread channels

B - Main tread channels with TWIs -arrows-

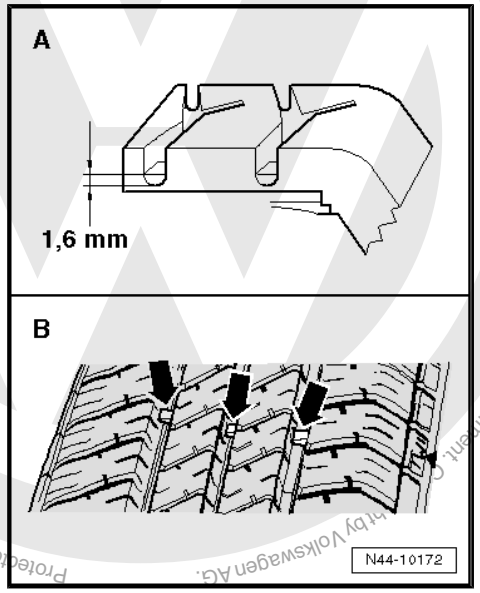

5.9 One-sided wear

This is often caused by driving style, but can be the result of incorrect wheel alignment.

Protected by copyright. Copying for private or commercial purposes, in part or in whole, is not permitted unless authorised by Volkswagen AG. Volkswagen AG does not guarantee or accept any liability with respect to the correctness of information in this document.
satelettronica

Increased one-sided wear

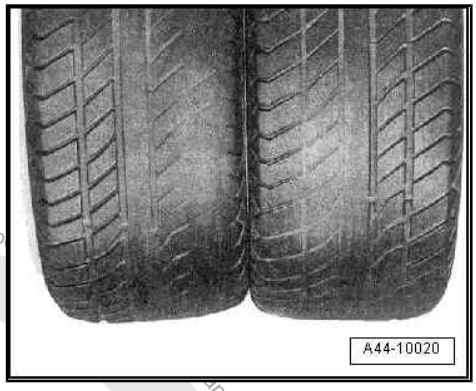

One-sided wear, usually in conjunction with signs of scuffing on the ribs of the tread and in the fine grooves, always occurs when the tyres have been allowed to roll with an extreme tyre slip angle, causing them to »rub« on the road surface.

Driving fast on a stretch of road with lots of curves will cause increased wear, in particular on the outer shoulder.

A rounded outer shoulder on the tyre in conjunction with a particularly high degree of wear on the outer tread blocks indicates fast cornering. This wear pattern is influenced by driving style.

To optimise handling, the suspension is set to specified toe-in and camber values. Increased one-sided wear can be expected if tyres are allowed to roll under conditions which differ from those specified.

One-sided wear is especially likely if the toe and camber have not been set correctly. Moreover, there is a greater risk of diagonal washout.

Toe-out or negative toe-in

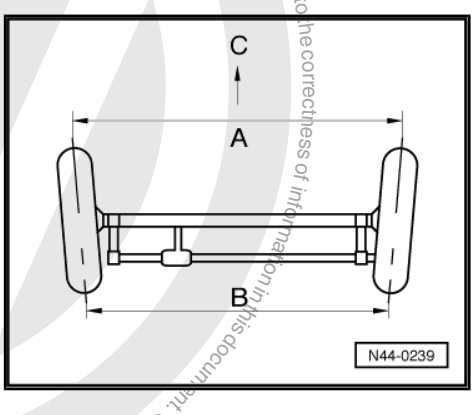

Distance between front of wheels -A- is greater than distance between rear of wheels -B- (-C- = direction of travel).

Protected by copyright. Copying for private or commercial purposes, in part or in whole, is not permitted unless authorised by Volkswagen AG. Volkswagen AG does not give any liability with respect to the correctness of information in this document. Copyright by Volkswagen AG.
satelettronica

Protected by copyright. Copyright by Volkswagen AG. Volkswagen AG does not guarantee or accept any liability with respect to the correctness of information in this document. Copyright by Volkswagen AG. Reproduction, distribution or publication in part or in whole is permitted only for commercial purposes and authorised by Volkswagen AG.

Toe-in or positive toe

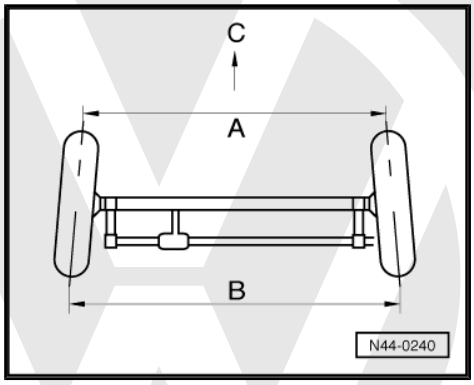

Distance between front of wheels -A- is less than distance between rear of wheels -B- (-C- = direction of travel).

To prevent one-sided wear, care must be taken to ensure that the wheel is set within the tolerance specified by the vehicle manufacturer. The most frequent deviation of the wheel alignment is caused by external influences, for example hard contact with the kerbstone when parking.

By measuring the axle geometry, you can check whether the wheel alignment is within the specified tolerances or whether it has to be corrected.

Running gear modifications

Using “suspension-lowering kits” and/or alloy wheels that have not been recommended by VW may result in altered wheel positions which deviate from the specified alignment.

Even if the axle geometry is correct with the vehicle stationary during wheel alignment, the changed vehicle height and wheel positions can cause the wheel suspension to move differently during operation.

Uneven wear is then unavoidable.

Unsuitable use of self-levelling adjustments on pneumatic suspension system

The use of the offroad level is recommended only for driving offroad. Permanent use of the offroad level during normal road operation can lead to increased tyre wear as the height of the wheel position is different to the road level.

The way to prevent one-sided tyre wear is to ensure the wheel alignment is correct on one hand and on the other hand to make sure the vehicle is used only for its intended purpose:

Regular servicing of the vehicle and tyres helps to prevent tyre wear. The following should be noted in particular with regards to this:

- The prescribed minimum tyre inflation pressures must be adhered to.
- Different wear on the front and rear axle depending on the driving style is unavoidable. This condition can be compensated for by rotating the wheels from front to rear. The ideal opportunity to do this, for example, is during the seasonal change between winter and summer tyres. This change also has a positive side effect in that the tyres can wear down equally, meaning that a completely new set of tyres can be fitted. This prevents differences between the tread depths of the tyres on each axle, which can have negative effects on road holding.
- Saw tooth formation is a normal wear pattern, particularly if the driving style is very careful ⇒ page 30 . This can lead to increased rolling noise, which generally becomes better as the tread depth decreases. In the event of light saw tooth formation or if saw tooth formation is just starting, exchanging the wheels between axles is normally sufficient. If saw tooth formation is very pronounced, the wheels have to be changed in accordance with ⇒ page 30 so their direction of rotation is reversed.

satelettronica

Copyright by Volkswagen AG. Protected by copyright. Copying for commercial purposes, in part or in whole, is not permitted without the authorised by Volkswagen AG. Volkswagen AG does not guarantee or assume any liability with respect to the correctness of information in this document.

- Some tread patterns may create an impression of premature wear: if winter tyre sipes or channels in the tread are worn down, only compact profile blocks without patterns remain, thus giving the impression of a worn tyre. In this case, the remaining tread depth must be measured in each groove. If this is at or below the minimum tread depth, the tyre can continue to be used without restrictions. (In Germany, the minimum is 1.6 mm; it is recommended, and in Austria, required, that winter tyres that are worn down to 4 mm be used only in summer)

5.10 Outer shoulder wear

Unsuitable use of self-levelling adjustments on pneumatic suspension system

The use of the offroad level is recommended only for driving offroad. Permanent use of the offroad level during normal road operation can lead to increased tyre wear as the height of the wheel position is different to the road level.

The way to prevent one-sided tyre wear is to ensure the wheel alignment is correct on one hand and on the other hand to make sure the vehicle is used only for its intended purpose:

Regular servicing of the vehicle and tyres helps to prevent tyre wear. The following should be noted in particular with regards to this:

- The prescribed minimum tyre inflation pressures must be adhered to.
- Different wear on the front and rear axle depending on the driving style is unavoidable. This condition can be compensated for by rotating the wheels from front to rear. The ideal opportunity to do this, for example, is during the seasonal change between winter and summer tyres. This change also has a positive side effect in that the tyres can wear down equally, meaning that a completely new set of tyres can be fitted. This prevents differences between the tread depths of the tyres on each axle, which can have negative effects on road holding.
- Saw tooth formation is a normal wear pattern, particularly if the driving style is very careful ⇒ page 30 . This can lead to increased rolling noise, which generally becomes better as the tread depth decreases. In the event of light saw tooth formation or if saw tooth formation is just starting, exchanging the wheels between axles is normally sufficient. If saw tooth formation is very pronounced, the wheels have to be changed in accordance with ⇒ page 30 so their direction of rotation is reversed.
- Some tread patterns may create an impression of premature wear: if winter tyre sipes or channels in the tread are worn down, only compact profile blocks without patterns remain, thus giving the impression of a worn tyre. In this case, the remaining tread depth must be measured in each groove. If this is at or below the minimum tread depth, the tyre can continue to be used without restrictions. (In Germany, the minimum is 1.6 mm; it is recommended, and in Austria, required, that winter tyres that are worn down to 4 mm be used only in summer)

5.11 Wear in middle of tyre

This wear pattern is found on the driven wheels of high-performance vehicles that are frequently driven long distances at high speeds.

At high speeds, centrifugal forces cause the tyre diameter to increase more in the middle of the tread than it does at the shoulder. This causes drive forces to be transferred to the road surface from

satelettronica

the centre section of the tread. This is reflected in the wear pattern.

Effects of this kind can be especially pronounced on wide tyres.

It is not possible to counter this wear pattern by reducing the tyre pressure.

> ⚠ **WARNING**
>
> ***For safety reasons, the tyre pressure must not under any circumstances be reduced below the specified tyre pressure.***

A more or less even tread wear pattern can be achieved by interchanging the tyres on the driven wheels and non-driven wheels in good time.

Increased tread wear

The typical tread wear pattern of tyres run on the driven wheels of a high-performance vehicle.

The increased wear in the centre section of the tread results from the extra loading associated with centrifugal forces within the tyre and the transmission of drive forces.

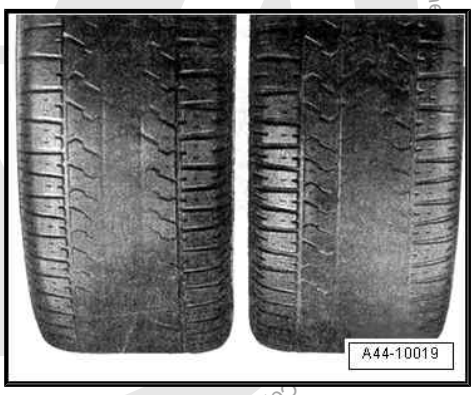

Protected by copyright. Copying for private or commercial purposes, in part or in whole, is not permitted unless authorised by Volkswagen AG. Volkswagen AG does not guarantee or accept any liability with respect to the
Copyright by Volkswagen AG.
satelettronica

5.12 Diagonal washout

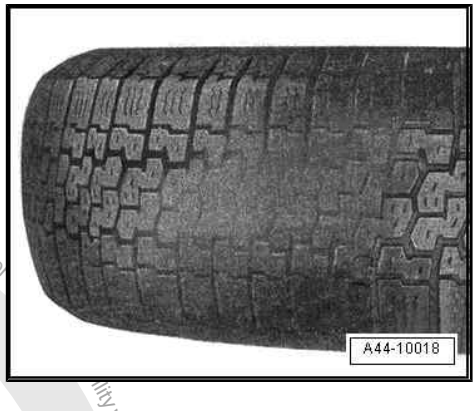

Diagonal washout on a tyre

Diagonal washout runs at an angle of approx. 45° to the direction of rotation.

It usually occurs at one point only, but can also occur at several points around the circumference of the tyre.

Washout occurs almost exclusively on the tyres on the non-driven wheels, in particular at the rear left. Washout occurs very often on some models, while it poses no problem at all on other models. The effect is intensified by high toe-in values. Toe-in values in the region of the lower tolerance limits of the specified alignment values improve the wear pattern.

The most pronounced diagonal washout is often found in the area where the tyre components are joined.

Wheels with positive toe-in roll with a slip angle even straight ahead. This leads to a diagonal stress in the contact patch or footprint on the tyre/road surface.

This wear pattern is intensified when tyre pressure is too low. To avoid such tread wear patterns, the toe-in values of the two rear wheels should be identical and the specified tyre pressures observed.

If you detect washout, you should fit the wheels on the driven axle, assuming the washout is identified at an early stage. Deeper washout cannot be repaired.

Faulty adjustment

If a customer complains of “diagonal wear spots”, the toe adjustment must be examined. If toe-in is correct, the cause of the diagonal washout is very probably the tyre itself.

Tyres with diagonal washout caused by incorrectly set axle geometry at the wheels are not covered by warranty.

Protected by copyright. Copyright by Volkswagen AG.
Volkswagen AG does not guarantee or assume any liability with respect to the correctness of information in this document.
Copyright by Volkswagen AG.
satelettronica

6 Tyre noise

6.1 General notes on tyre noise

Tyre noise that can be heard by the human ear is caused by vibrations which are transmitted by the air from the source of the sound to our ears.

Of interest here are the noises caused by certain characteristics and effects while the tyres are rolling (source of the sound).

The cause of the noise is largely dependent on the combination of the road surface and tyres.

The structure and material of the road surface will greatly affect tyre noise. For example, the noise level on a wet road is much higher than on a dry road.

The pattern of the tyre tread also has a significant influence on tyre noise. Tyres with transverse grooves at an angle of 90° generate more noise than tyres with grooves running diagonally.

Small tread blocks are unstable. Their highly pronounced deformation agitates the air as the tyres roll. This creates the air vibrations that cause tyre noise.

Wider tyres are louder. They need more tread channels to displace water. When they are rolling, these tread channels displace the air, also creating air vibrations.

Further effects that also influence tyre noise:

- “Tyre vibration” is the principal cause of tyre noise. It is caused by the columns of air in the tread channels being agitated.
- “Air pumping” is the compression and expansion of the air caused by the deformation of the tread blocks as the tyre contact patch moves along the road surface.

Useful information regarding tyre noise

Tyre noise is determined primarily by the tyres and the road surface.

The roughness, structure and material of the road surface influence tyre noise.

The widths of the tyre and the rim, among other things, influence tyre noise. Due to their larger contact area, wider tyres will cause more tyre noise than narrow tyres, as more air has to be displaced and more “mass” is agitated to create vibrations.

A wider wheel rim will also cause a tyre to have a wider contact patch. The effect on tyre noise is thus very similar to that of a wider tyre. Moreover, the damping characteristics of the tyre may also be adversely affected by the wider wheel rim.

On vehicles with a front-mounted engine, tyre noise is more perceptible at the rear of the vehicle, as wind and engine noises are not as loud there.

6.2 Saw-tooth wear

Saw-tooth wear is a stepped wear pattern on the individual tread blocks ⇒ page 31 that can cause increased tyre noise. The saw tooth is caused by uneven deformation of the tread blocks in the tyre's contact patch. Saw-tooth wear is more pronounced on non-driven wheels than on driven wheels.

Protected by copyright. Copying, distribution or publication for commercial purposes, in part or in whole, not permitted unless authorised by Volkswagen AG. Volkswagen AG does not guarantee or accept any liability with respect to the correctness of information in this document. Copyright by Volkswagen AG.
satelettronica

New tyres are more susceptible to saw-tooth wear because of the greater elasticity of the high tread blocks. As the tread depth decreases, the tread blocks become more rigid and the tendency to wear in a saw-tooth pattern decreases.

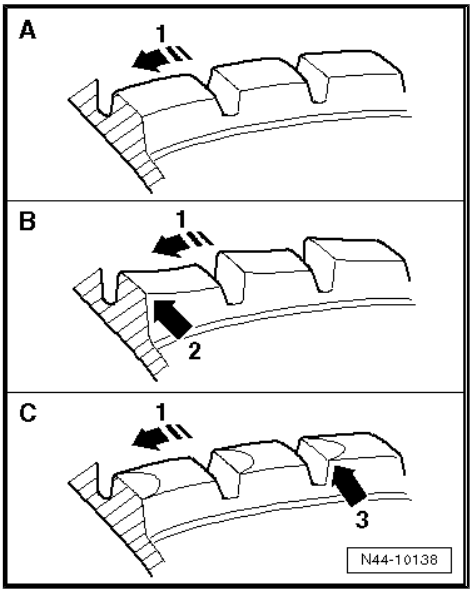

Appearance of saw tooth

A - Tread block of a new tyre; seen in direction of motion -arrow 1-, tread blocks are equally high in front and back.

B - Development of saw teeth; seen in the direction of rotation -arrow 1-, tread blocks are higher in front -arrow 2- than in back.

C - Seen in the direction of rotation -arrow 1-, tread blocks show greater wear in the front section of the “saw tooth” -arrow 3-.

Pronounced saw-tooth wear can lead to customers complaining about tyre noise.

Pronounced saw-tooth wear occurs under the following conditions:

- toe values are too high
- tyre pressures are incorrect
- tread is coarse and open
- tyres are fitted on the non-driven axle
- very fast cornering.

non-directional tyres

In the event of saw-tooth wear, the direction of rotation of the tyre must be reversed. If saw-tooth wear is especially pronounced and tyre noise has increased, interchange the tyres diagonally. This will reduce the saw-tooth effect.

On front-wheel-drive vehicles, this effect is intensified by the greater wear on the front axle.

Tyre noise will be somewhat louder immediately after the tyres have been interchanged but will return to a normal level after about 500…1,000 km have been driven.

Directional tyres

In the event of increased saw-tooth wear on the rear tyres – in particular on front-wheel drive vehicles – interchange the front and rear tyres. In the event of increased saw-tooth wear on the outer edges of the tyres on one axle, turn both tyres around on their rims. The left-hand wheel must then be fitted on the right side of the vehicle and the right-hand wheel on the left side.

6.3 Flat spots (from locking wheels)

Flat spots can result from an extreme brake application which causes the wheels to lock, so that the rubber is worn off at the contact patch between the tread and the road surface.

As the tyres slide over the road surface, friction generates heat, which also reduces the wear resistance of the tread material.

Not even a highly wear-resistant tread compound can prevent the flat spots caused by violent braking.

Even ABS-controlled brake systems cannot prevent brief locking of the wheels, and thus, minor flat spots.

The degree of such wear depends largely on the vehicle speed, the road surface and the load placed on the wheel. The following examples should make this clear.

Copyright by Volkswagen AG. Volkswagen AG does not guarantee or accept any liability with respect to the correctness of information in this document. Copyright by Volkswagen AG. Volkswagen AG does not give authorisation or permission to third parties to use this document for commercial purposes, in part or in whole.
satelettronica

Protected by copyright. Copying for private or commercial purposes, in part or in whole, is not permitted unless authorised by Volkswagen AG. Volkswagen AG does not guarantee or accept any liability with respect to the correctness of information. Copyright by Volkswagen AG.

If a vehicle is braked to a standstill on a dry surface with the wheels locked, the amount of rubber worn from the tyre will cover an area the size of a postcard and will have a thickness of:

- up to 2.0 mm from a speed of 57 km/h (23.8 m braking distance)
- up to 3.3 mm from a speed of 75 km/h (41.8 m braking distance)
- up to 4.8 mm from a speed of 92 km/h (71.6 m braking distance)

Flat spots in tread

Tyres with such damage must no longer be used and must be renewed.

satelettronica

7 Rough running caused by wheels/ tyres

7.1 Causes of rough running

Rough running can have a number of different causes. It can also be caused by tyre wear. Tyre wear caused by driving is not always evenly spread across the entire running surface of the tyre. This causes slight imbalances which affect the smooth running of a wheel which was previously exactly balanced.

Minor imbalances will not be felt at the steering wheel, but that does not mean that they are not there. They increase wear on the tyre and thus reduce the tyre service life.

Recommendation

To ensure

- optimal safety,
- smoothest possible running and
- even wear

throughout a tyre's service life, we recommend having the wheels and tyres balanced at least twice during the tyre's service life.

7.2 Balancing wheels

Before you start balancing the wheels, the following requirements must be met.

- The tyre pressure must be OK.
- The tyre tread must not show one-sided wear and should be at least 4 mm deep.
- The tyre must not show any signs of damage, for example cuts, piercing, foreign bodies, etc.
- The wheel suspension, steering and steering linkage, including the shock absorbers, must be in perfect condition.
- You must have conducted a road test.

7.3 Conducting a road test before balancing wheels

If a customer brings a vehicle to the workshop complaining about “vibration”, a road test is essential prior to balancing the wheels.

♦ This will give you information about the nature of the rough running.

♦ You will be able to determine in which speed range the rough running occurs.

– Raise the vehicle on a lifting platform immediately after the road test.

– Mark the positions of the tyres on the vehicle.

Tyre position	Marked with …
Front left tyre	FL
Front right tyre	FR
Rear left tyre	RL
Rear right tyre	RR

Protected by copyright. Copying for private or commercial purposes, in part or in whole, is not permitted unless authorised by Volkswagen AG. Volkswagen AG does not guarantee or accept any liability with respect to the correctness of information in this document. Copyright by Volkswagen AG.

satelettronica

– Remove wheels from vehicle.
– Balance the wheels.

7.4 Balancing wheels on stationary wheel balancing machine

Clamp wheel into wheel balancing machine

Note

When balancing wheels, please remember that cleanliness is absolutely essential, as indeed it is in the case of any other repair work you carry out. Only then can you attain a flawless result!

Dirt and rust in the area of the contact surfaces and centre of the wheel distort the result.

– Clean the contact surfaces, the centre of the wheel and the recess on the inside of the wheel before mounting the wheel on the wheel balancer.
– Mount the wheel with tyre on the wheel balancer.

Protected by copyright. Copying for private or commercial purposes, in part or in whole, is not permitted unless authorised by Volkswagen AG. Volkswagen AG does not guarantee or accept any liability with respect to the correctness of information in this document. Copyright by Volkswagen AG.
satelettronica

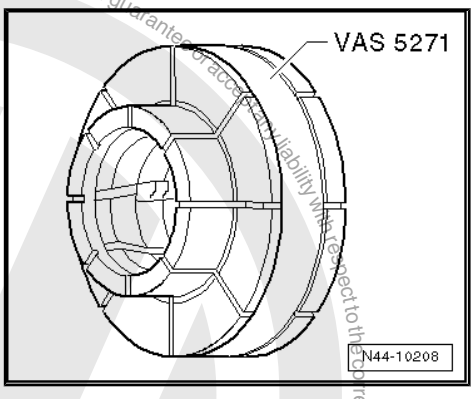

Note

- *To clamp the wheel, use e.g. centring system for wheel balancing machines - VAS 5271- .*
- *This ensures that the wheel is 100% centred and that the wheel will be clamped without damage!*
- *The wheel cannot be centralised 100% with conical clamping elements on the wheel balancing machine.*
- *A deviation of 0.1 mm from the centre results in an imbalance of 10 grams at the wheel/rim.*

Procedure for balancing wheels and tyres

– Rotate wheel and tyre on wheel balancer.

– Check that the indicator lines on the sidewall of the tyre near the wheel rim flange run evenly.

– Check that the body of the tyre runs evenly while the wheel and tyre are rotating.

Note

If one-sided wear, flat spots from braking or severely washed out spots are apparent, balancing cannot achieve smooth running. In this case, the tyre must be renewed.

– Check the true running of the wheel and tyre. If the wheel and tyre do not run true although there are no flat spots, radial or lateral runout may be the cause.

– Check the wheel for radial or lateral runout ⇒ page 37 .

– If radial and lateral runout are within the specified tolerance, balance the wheel and tyre.

Note

- *More than 60 grams of weight per tyre should not be used.*
- *If more weight is required, you may be able to achieve smoother running by "matching" the tyre and rim. Matching tyres* *⇒ page 39* *.*
- *The wheel balancer display should indicate 0 gram.*
- *As an alternative to match mounting, you could use the vibration control system - VAS 6230-* *⇒ page 36* *.*

– Bolt the wheel to the vehicle.

– First hand-tighten the lowest wheel bolt to about 30 Nm.

– Then tighten the remaining wheel bolts diagonally to about 30 Nm. This process centres the wheel on the hub.

– Lower vehicle onto its wheels.

– Now use a torque wrench to tighten the wheel bolts diagonally to the specified torque.

Carry out road test

– After balancing the wheels and tyres, carry out a road test.

Protected by copyright. Copying for private or commercial purposes, in part or in whole, is not permitted unless authorised by Volkswagen AG. Volkswagen AG does not guarantee or accept any liability with respect to the correctness of information in this document. Copyright by Volkswagen AG.
satelettronica

If you detect vibration during the road test, it may be due to tolerance in the wheel centring.

In unfavourable circumstances, the component tolerances of wheels and hubs could cumulate. This too can lead to vibration. This can be alleviated using a finish balancer. ⇒ page 36

7.5 Vibration control system - VAS 6230-

Using the vibration control system - VAS 6230- you can perform more functions than just stationary balancing.

A special feature of this system is the testing of the radial force of the wheel and tyre while rolling.

A roller presses against the wheel with a force of about 635 kg. This simulates the vertical tyre force against the road surface during travel.

Radial and lateral runout in the wheel and tyre and differences in the stiffness of the tyre cause the vertical force of the wheel to vary.

The -VAS 6230- detects and stores the position of the maximum measured radial force in the tyre. Then the position of the smallest distance between the wheel rim flange and the centre of the rim is measured.

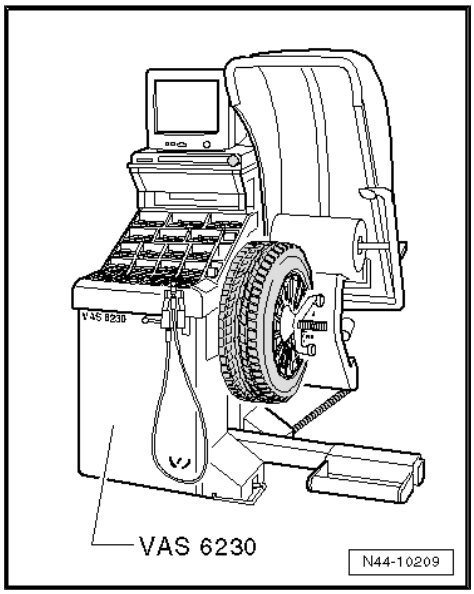

7.6 Finish balancer

Note

- *Before working with a finish balancer , the mechanic needs to have been instructed by the manufacturer of the balancer.*
- *To balance the wheels, set the wheels of the driven axle on the sensor platforms (only the front wheels of a front-wheel drive vehicle, all four wheels of a four-wheel drive vehicle).*

If you determine a residual imbalance greater than 20 grams when balancing the wheels, you should rotate the mounting position of the wheel on the hub.

– Mark the point at which the imbalance is indicated.

– Unbolt the wheel and rotate its position on the hub so that the marking points downwards.

Note

The hub must not rotate during this procedure.

– First hand-tighten the lowest wheel bolt to about 30 Nm.

– Then tighten the remaining wheel bolts diagonally to about 30 Nm. This process ensures that the wheel is centred properly on the hub.

– Check whether the imbalance is less than 20 grams using the finish balancer.

Protected by copyright. Copying for private or commercial purposes, in part or in whole, is not permitted unless authorised by Volkswagen AG. Volkswagen AG does not guarantee or accept any liability with respect to the correctness of information in this document. Copyright by Volkswagen AG.
satelettronica

Note

The imbalance should always be less than 20 grams before you change the balance weight.

- If necessary, remove the wheel bolts again.
- Rotate the wheel relative to the hub once more, turning it one or two wheel bolt holes further.
- Tighten the wheel bolts using the method described above.

Note

Do not try to reduce the imbalance using balance weights until the imbalance is less than 20 grams.

- Balance the wheels until the imbalance is less than 5 grams.
- Tighten wheel bolts to specified torque if you have not already done so.

WARNING

Always tighten wheel bolts to specified torque using a torque wrench!

7.7 Radial and lateral runout of wheels and tyres

Radial and lateral runout occur when the wheel and tyre do not run absolutely true.

For technical reasons, 100% true running is not possible.

Therefore, the manufacturers of these components allow a precisely determined tolerance.

Mounting the tyre in an unfavourable position on the wheel can cause the maximum allowed tolerance for wheel with tyre to be exceeded.

The table shows the maximum permissible tolerances for a wheel with mounted tyre.

Tolerances for radial and lateral runout of wheels with tyres

Wheel with tyre	Radial runout (mm)	Lateral runout (mm)
Passenger cars	0.9	1.1 (1.3 in vicinity of lettering)

7.8 Checking radial and lateral runout on wheels and tyres with tyre gauge - V.A.G 1435-

Checking lateral runout

- Preload tyre gauge about 2 mm.

Protected by copyright. Copying for private or commercial purposes, in part or in whole, is not permitted unless authorised by Volkswagen AG. Volkswagen AG does not guarantee or accept any liability with respect to the correctness of information in this document. Copyright by Volkswagen AG.

sateletronica

– Set tyre gauge against sidewall of tyre.
– Slowly rotate the wheel.
– Note the smallest and the largest dial readings.

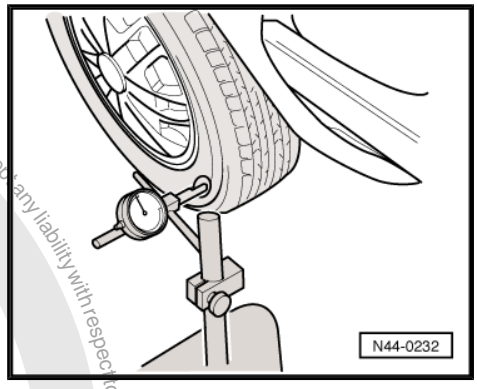

Note

If the difference is greater than 1.3 mm, the lateral runout is too great.

In this case, you can reduce lateral runout by match mounting the tyre ⇒ page 39 .

Extreme values on the tyre gauge due to small irregularities in the rubber may be disregarded.

Checking radial runout

– Preload tyre gauge about 2 mm.
– Set the tyre gauge against the tyre tread.
– Slowly rotate the wheel.
– Note the smallest and the largest dial readings.

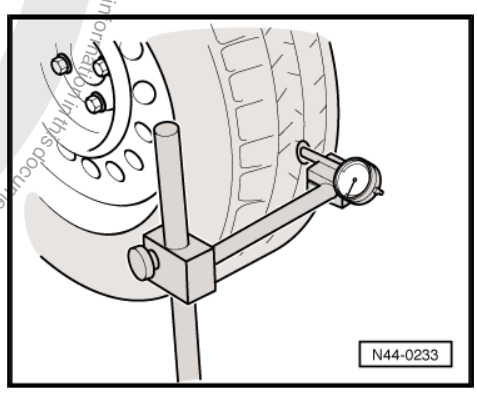

Note

If the difference is greater than 1 mm, the radial runout is too great.

In this case, you can reduce radial runout by match mounting the tyre ⇒ page 39 .

7.9 Checking radial and lateral runout on wheel rim

– Mount the wheel on the wheel balancer .
– Use the wheel balancing machine centring system - VAS 5271- .
– Preload tyre gauge about 2 mm.
– Slowly rotate the wheel.
– Note the smallest and the largest dial readings.

S - Lateral runout

H - Radial runout

– Compare the measured values with the specifications in the table ⇒ page 38 .

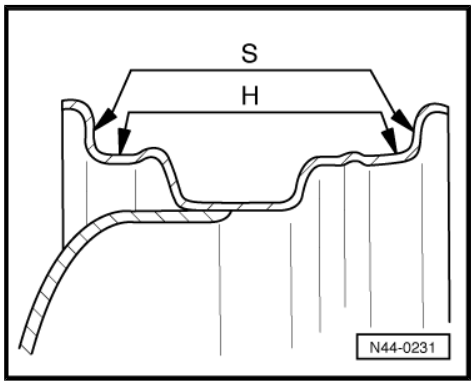

Note

Extreme values on the tyre gauge due to small irregularities may be disregarded.

Specifications for radial and lateral runout on wheel rim

Wheel rim		Radial runout (mm)	Lateral runout (mm)
Passenger cars	Steel wheel	0.5	0.5

satelettronica

Wheel rim		Radial runout (mm)	Lateral runout (mm)
	Alloy wheel	0.5	0.8
Sharan	Steel wheel	0.5	0.8
	Alloy wheel	0.5	0.5

Note

If the measured value exceeds the specification, acceptably smooth running cannot be attained.

7.10 Matching

General

When radial or lateral runout of the wheel and tyre coincide, the imbalance of the wheel is amplified by the tyre.

For technical reasons, 100% true running is not possible ⇒ page 37 .

Before match mounting the used wheels which are fitted on the vehicle, run the tyres warm. This will eliminate any flat spots caused by storage or handling, ⇒ page 40 .

Procedure for match mounting

– Deflate the tyre.
– Press the tyre beads off the rim flanges.
– Coat the tyre bead all round with tyre fitting paste .
– Rotate the tyre 180° relative to the wheel.
– Inflate the tyre to approx. 4 bar.
– Mount the wheel with tyre on the wheel balancer.
– Check true running, that is, radial and lateral runout.

Note

- *If the specified values for radial and lateral runout are not exceeded, the wheel can be balanced to 0 gram. Specified values appear on ⇒ page 37 .*
- *If the radial and lateral runout is not within the specifications, the tyre must be rotated again.*

– Deflate the tyre and press off the tyre beads from the rim flanges.
– Rotate the tyre 90° with respect to the wheel (1/4 of a turn).
– Inflate the tyre to 4 bar again and check true running.

Note

- *If the specified values for radial and lateral runout are not exceeded, the wheel can be balanced to 0 gram.*
- *If the radial and lateral runout are not within the specified values, the tyre must be rotated again.*

Protected by copyright. Copying for private or commercial purposes, in part or in whole, is not permitted unless authorised by Volkswagen AG. Volkswagen AG does not guarantee or accept any liability with respect to the correctness of information in this document. Copyright by Volkswagen AG.
satelettronica

– Press the tyre off the rim flanges again as described above.

– Rotate the tyre 180° with respect to the wheel (1/2 a turn).

If the radial and/or lateral runouts are still not within the specifications, check the radial and/or lateral runouts of the wheel: ⇒ page 38 .

If the measured values for radial and lateral runout of the wheel are within the specified values, the tyre has an impermissibly high radial or lateral runout. In this case, the tyre must be renewed.

Note

- *After fitting the tyres there will be fitting lubricant between the tyres and the rim flanges.*
- *Therefore, severe braking and acceleration manoeuvres must be avoided for the first 100 or 200 km driven. The tyres may otherwise rotate on the rims and your work will have been in vain.*

7.11 Flat spots caused by storage or handling

What is a flat spot?

The terms flat area and flats are also used for the term flat spot.

Flat spots caused by storage or handling also cause vibration in the same way as incorrectly balanced wheels do. It is important that flat spots on the tread are identified as such.

Flat spots caused by storage or handling cannot be balanced and they can reoccur at any time due to various circumstances. Flat spots caused by storage or handling can be eliminated without complicated special tools. This does not apply to flat spots caused by hard braking ⇒ page 31 .

Note

Flat spots caused by hard braking cannot be repaired. Such tyres must be renewed.

Reasons for flat spots caused by storage or handling:

- The vehicle has been left standing in one place without being moved for several weeks.
- The tyre inflation pressure is too low.
- The vehicle was placed in a paint shop drying booth after being painted.
- The vehicle was parked with warm tyres in a cool garage or similar for a long period of time. In this case, a standing flat spot may even occur overnight.

Eliminating flat spots caused by storage or handling

- Flat spots caused by storage or handling cannot be eliminated from the tyre using workshop equipment.
- Flat spots caused by storage or handling can be removed only by running the tyres warm.
- The method described below is not recommended in cold and wintry weather.

Requirements and conditions:

– Check and, if necessary, correct inflation pressures.

Protected by copyright. Copyright by Volkswagen AG. Volkswagen AG does not guarantee or accept any liability with respect to the correctness of information in this document. Copyright by Volkswagen AG.
Duplicate, in part or in whole, is not permitted unless authorized by Volkswagen AG for commercial purposes.
satelettronica

– Drive the car on a motorway where possible.
– Traffic and road conditions permitting, drive a 20 to 30 km stretch at a speed of 120 to 150 km/h.

> ⚠ **WARNING**
>
> - *Do not endanger yourself or other road users during this road test.*
> - *Observe the highway code and speed limitations in force when performing the road test.*

– Raise the vehicle immediately following the road test.
– Remove the wheels from the vehicle.
– Balance the wheels on a stationary wheel balancer ⇒ page 34 .

Protected by copyright. Copying for private or commercial purposes, in part or in whole, is not permitted unless authorised by Volkswagen AG. Volkswagen AG does not guarantee or accept any liability with respect to the correctness of information in this document. Copyright by Volkswagen AG.
satelettronica

8 Vehicle pulls to one side

8.1 General

Perform a road test to determine whether a vehicle is pulling to one side and if so, which side. If the vehicle pulls to one side ⇒ page 43 .

When wheel alignment is checked, include the wheel alignment test results in tyre complaint report.

Manufacturer's tolerances can lead to a slight amount of taper (asymmetry) in the tyre carcass. The rolling tyre then develops a lateral force which acts directly on the wheel suspension, leading to self-steering of the vehicle. Strategic rotation of the wheels can balance out this self-steering behaviour.

8.2 Conicity

Conicity is caused by a slight offset of the tread and/or the belt (amounting to a few tenths of a millimetre) relative to the geometric centre of the tyre. Taper is not visible and cannot be measured with equipment available in the workshop.

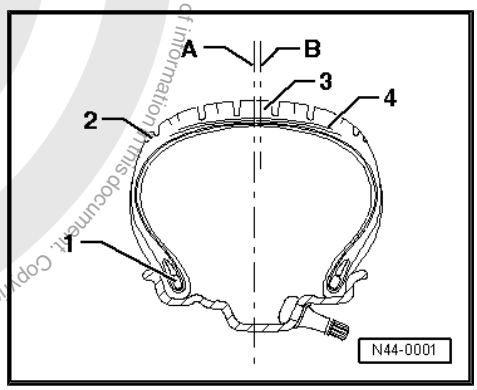

Parts of a tyre

1 - Bead

2 - Shoulder

3 - Tread

4 - Steel cord belt

A - Geometrical centre of tyre

B - Actual centre of belt. It can be offset to inside or outside.

Protected by copyright. Copying for private or commercial purposes, in part or in whole, is not permitted unless authorised by Volkswagen AG. Volkswagen AG does not guarantee or accept any liability with respect to the correctness of information in this document. Copyright by Volkswagen AG.

satelettronica

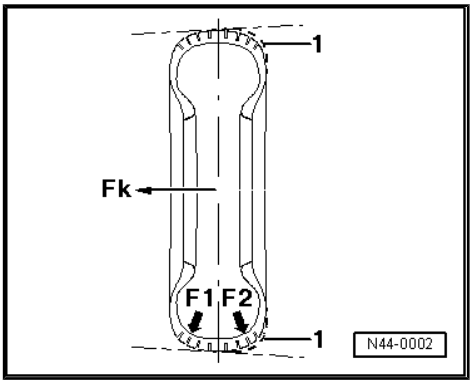

Exaggerated for clarity.

1 - Offset of belt and tread

F1 - Unequal vertical wheel forces

F2 - Unequal vertical wheel forces

Fk - Conicity force

The offset produces differences in stiffness at the inner and outer shoulders of the tyre, resulting in differing vertical wheel forces. Consequently the belt or tread will not be pressed onto the road surface with the same force (F1, F2). A conical, or tapered, shape develops. The resulting force (conicity force Fk) can, depending on the speed, become so great that the vehicle then pulls to one side.

If the force Fk on one wheel of the axle is, for example, 50 Newton, and also 50 Newton on the other wheel, and both forces are exerted in the same direction, the forces are cumulated. Reversing a tyre on the rim can compensate for the lateral pull because the forces then act in opposite directions.

Because the direction in which the force of taper is exerted is not visible, only road tests and strategic rotation of wheels and tyres can establish which tyres cause the pulling.

The tyre consists of numerous components and materials which are vulcanised to form a single part at the end of a complicated manufacturing process. The result is differing production tolerances which make themselves noticeable through more or less strong lateral forces (conicity forces). These forces can also occur in new tyres.

Pulling to one side on front axle

Pulling to one side can be caused by the running gear. However, experience shows that in 90% of all complaints, the tyres cause pulling to one side.

Pulling to one side during normal driving

On a straight, level road surface, the vehicle wants to pull to one side at a constant speed or with moderate acceleration. Force can be felt at the steering wheel.

Pulling to one side during fast acceleration

Pulling to one side during fast acceleration is, in part, due to the basic design of vehicles with front wheel drive. Different friction levels at the left and right wheels or possible irregularities in the road surface (potholes) and consequently varying road adhesion have a substantial influence on the handling characteristics. This does not constitute a complaint which is covered by the warranty.

8.3 Remedies when vehicle pulls to one side

Test conditions before and during the road test:

- Check all suspension components on the front and rear axles for damage.
- Check tyre pressure and correct if necessary.
- Check the tyres for external damage. Punctures, cuts, bubbles on the sidewalls, flat spots from braking and/or damage to the tread.
- Ask the customer if the tyre had been damaged by a nail or similar object and was repaired by a tyre dealer. It may be necessary to renew such tyres.

Protected by copyright. Copying for private or commercial purposes, in part or in whole, is not permitted unless authorised by Volkswagen AG. Volkswagen AG does not guarantee or accept any liability with respect to the correctness of information in this document. Copyright by Volkswagen AG.
satelettronica

– Check tyres for even wear and tread depth.
– Are all tyres of the same type, manufacture and tread pattern?
– If the tyres are non-directional, ensure that all DOT classifications on the tyre face outwards. The wheels and/or tyres on the vehicle may have already been changed around at an earlier date.
– Is the make of tyre approved by the factory as original equipment?
– Perform the road test on a road which is level, straight and ungrooved and does not drop off to one side.
– Perform the road test with the customer under the conditions specified above. Ask the customer to demonstrate the problem.

Note

There must be no cross wind during the road test.

If the complaint is justified, we recommend rotating the wheels and tyres as described below.

Before you begin, observe the following notes; otherwise your efforts may not have the desired effect.

Note

- *Mark the tyres before the first rotation, e.g. FR, FL, RR, RL.*
- *After rotating wheels or reversing the tyre on its rim, you must observe very carefully how the vehicle behaves during the road test. Note how and what was changed.*
- *Assess the intensity of or a possible change in the tendency to pull to one side.*
- *For this purpose, it is important that the road tests are always performed by the same person on the same road. It is best to drive the "test course" in both directions.*
- *Replacing a tyre with a new tyre does not guarantee that pulling to one side will be eliminated. Therefore it is recommended as a first step to carry out the strategic rotation of the wheels as described below.*
- *If there are large differences in the tread depth of the tyres on the front and rear axles, the tyres with the deeper tread should always be mounted on the rear axle.*

8.4 Strategic rotation of wheels for non-directional tyres

↓	
Perform a road test to determine if the vehicle pulls to one side and if so, which side.	
↓	
If the vehicle pulls to one side, interchange the front wheels.	
↓	
Carry out road test	
Vehicle travels in a straight line - END	
Vehicle pulls to other side	Vehicle pulls to the same side
↓	↓

Protected by copyright. Copying for private or commercial purposes, in part or in whole, is not permitted unless authorised by Volkswagen AG. Volkswagen AG does not guarantee or accept any liability with respect to the correctness of information in this document. Copyright by Volkswagen AG.
satelettronica

<table>
<tr><td colspan="2">Reverse one front tyre on its rim (direction of rotation is reversed).</td><td>Interchange front and rear tyres.</td><td></td></tr>
<tr><td colspan="2">↓</td><td colspan="2">↓</td></tr>
<tr><td colspan="2">Carry out road test</td><td colspan="2">Carry out road test</td></tr>
<tr><td colspan="2">Vehicle travels in a straight line - END</td><td colspan="2">Vehicle travels in a straight line - END</td></tr>
<tr><td colspan="2">Vehicle does not travel in a straight line.</td><td colspan="2">Vehicle does not travel in a straight line.</td></tr>
<tr><td colspan="2">↓</td><td colspan="2">↓</td></tr>
<tr><td colspan="2">Interchange the front and rear wheels.</td><td>Vehicle pulls to other side</td><td>No change</td></tr>
<tr><td colspan="2">↓</td><td>↓</td><td>↓</td></tr>
<tr><td colspan="2">Carry out road test</td><td rowspan="5">Reverse one front tyre on its rim (direction of rotation is reversed)</td><td rowspan="10">Check alignment of front and rear wheels and adjust if necessary.
If the alignment is correct, contact Product Support.</td></tr>
<tr><td colspan="2">Vehicle travels in a straight line - END</td></tr>
<tr><td colspan="2">Vehicle does not travel in a straight line.</td></tr>
<tr><td colspan="2">↓</td></tr>
<tr><td colspan="2">Interchange front wheels.</td></tr>
<tr><td colspan="2">↓</td><td>↓</td></tr>
<tr><td colspan="2">Carry out road test</td><td>Carry out road test</td></tr>
<tr><td>Vehicle travels in a straight line - END</td><td>Vehicle does not travel in a straight line.</td><td>Vehicle travels in a straight line - END</td></tr>
<tr><td rowspan="6"></td><td>↓</td><td>Vehicle does not travel in a straight line.</td></tr>
<tr><td>Mount new tyres on front axle</td><td>Mount new tyres on front axle</td></tr>
<tr><td>↓</td><td>↓</td></tr>
<tr><td>Carry out road test</td><td>Carry out road test</td></tr>
<tr><td>Vehicle travels in a straight line - END</td><td>Vehicle travels in a straight line - END</td></tr>
<tr><td>↓</td><td>↓</td></tr>
<tr><td colspan="4">Vehicle does not travel in a straight line; contact Product Support.</td></tr>
</table>

8.5 Strategic rotation of wheels having unidirectional tyres

↓
Perform a road test to determine if the vehicle pulls to one side and if so, which side.
↓
If the vehicle pulls to one side, interchange front and back wheels with tyres.
↓
Carry out road test
Vehicle travels in a straight line - END
Vehicle does not travel in a straight line.
↓
First renew one tyre on the front axle.
↓
Carry out road test
Vehicle travels in a straight line - END
Vehicle does not travel in a straight line.

Protected by copyright. Copying for private or commercial purposes, in part or in whole, is not permitted unless authorised by Volkswagen AG. Volkswagen AG does not guarantee or assume any liability with respect to the correctness of information in this document. Copyright by Volkswagen AG.
satelettronica

↓
Renew other tyre on the front axle.
↓
Carry out road test
Vehicle travels in a straight line - END
Vehicle does not travel in a straight line.
↓
Check front and rear wheel alignment.
↓
Carry out road test
Vehicle travels in a straight line - END
Vehicle does not travel in a straight line; contact Product Support.

Protected by copyright. Copying for private or commercial purposes, in part or in whole, is not permitted unless authorised by Volkswagen AG. Volkswagen AG does not guarantee or accept any liability with respect to the correctness of information in this document. Copyright by Volkswagen AG.

satelettronica

9 Tyre damage

9.1 General information

As tyre damage can have serious consequences, you and the driver should regularly check the tyres to identify any problems at an early stage.

Damaged tyres cannot withstand driving conditions such as high speed, long distances, sporty driving, and so on.

Damage can be caused in a number of ways:

- Driving with insufficient tyre pressure
- Assembly error when tyres were fitted on rims
- Damage by embedding objects
- Ageing
- Improper storage

WARNING

Whenever a safety risk cannot be ruled out, the tyre must be renewed.

9.2 Construction of a radial belted tyre

Cross section of a radial belted tyre

Protected by copyright. Copying for private or commercial purposes, partially or in whole, is not permitted unless authorised by Volkswagen AG. Volkswagen AG does not guarantee or accept any liability with respect to the correctness of information in this document. Copyright by Volkswagen AG.

satelettronica

1 - Tread block

2 - Tread groove

3 - Tread

4 - Nylon ply

5 - Belt layers
- ❑ Usually made of steel

6 - Bead core
- ❑ Consists of steel wires vulcanised into rubber.
- ❑ Ensures secure seating of the tyre on the rim.

7 - Bead filler

8 - Rim flange protection
- ❑ Protects the rim and tyre from abrasion from, for example, contact with the kerb
- ❑ Tyres with Maximum Flange Shield (or rim protector bar) are marked with the abbreviation MFS.

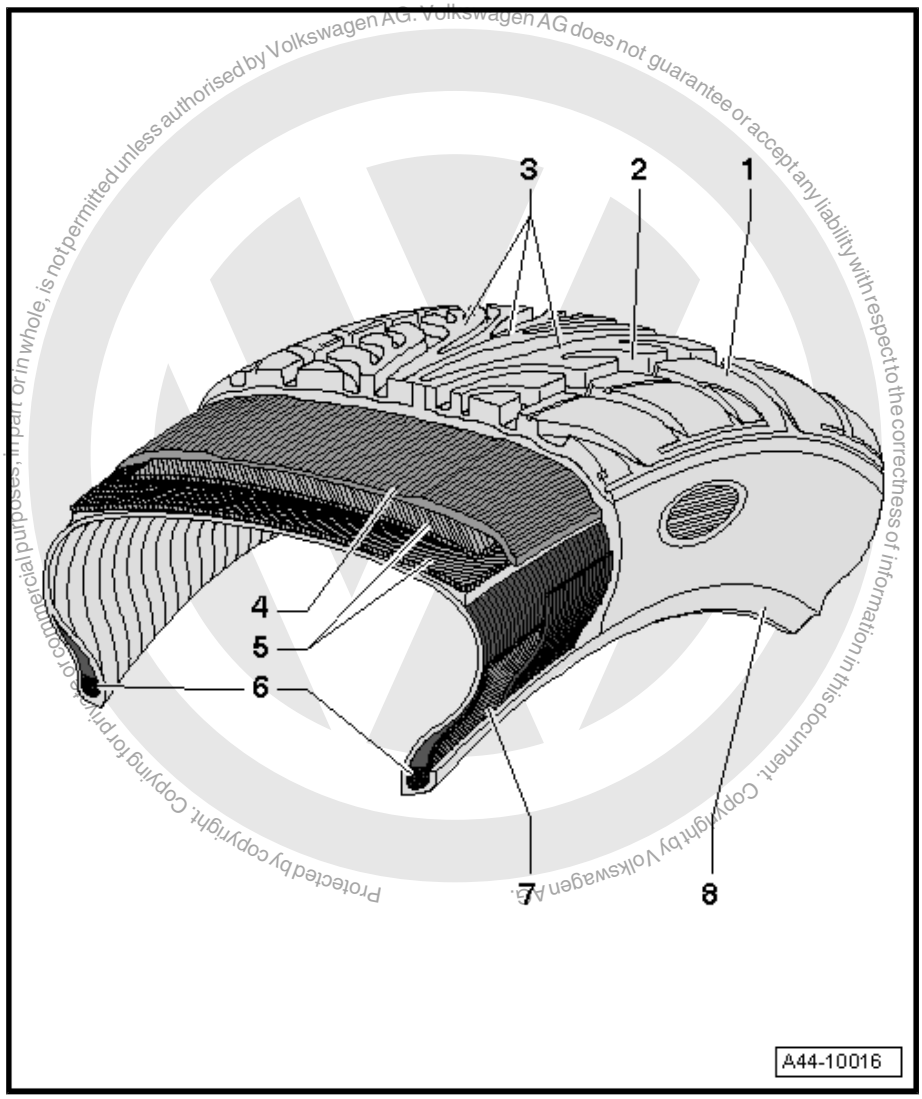

Protected by copyright. Copying for private or commercial purposes, in part or in whole, is not permitted unless authorised by Volkswagen AG. Volkswagen AG does not guarantee or accept any liability with respect to the correctness of information in this document. Copyright by Volkswagen AG.

The nylon ply -4-, belt layers -5-, bead cores -6- and bead filler -7- form the carcass. The carcass is the “load-bearing structure” of the tyre.

9.3 Impact damage

A swelling in the sidewall of the tyre indicates that the substructure of the carcass has been damaged.

Typical causes for such damage include, for example, driving over kerbs at a sharp angle.

Pinching the tyre in this way can damage the carcass.

The substructure of the tyre is stretched so far that individual fibres in the carcass may be broken.

The extent of the damage depends on the speed of impact, the angle of impact, the tyre pressure, the axle load and the type of obstacle.

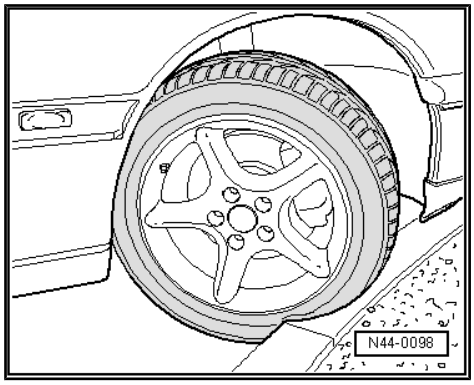

satelettronica

Pinch marks on tyre sidewall -arrows-

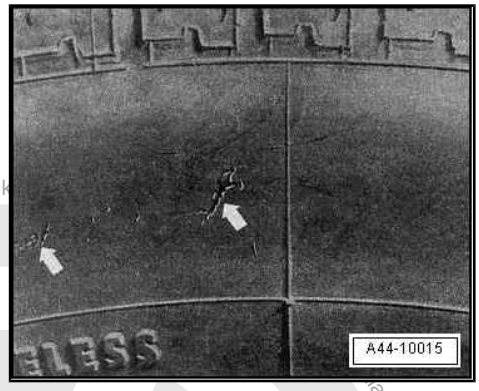

Note

- *Driving over kerbs should be avoided.*
- *If you cannot avoid driving over a kerb, you should do so very slowly and as square-on as possible.*

Interior view of a tyre with a punctured carcass

Due to a severe impact, the carcass was pinched on the wheel rim flange and is ruptured in the contact area.

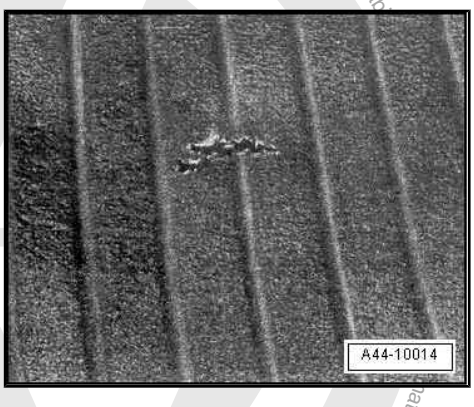

Damage inside tyre due to impact injury (double rupture)

Double rupture -arrows- caused by pinching when a kerb was driven over. Often not detectable from outside.

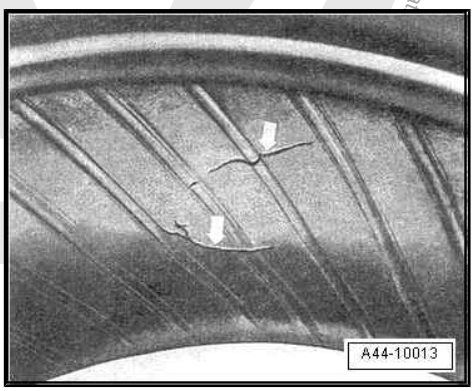

9.4 Cuts

Cut caused by a sharp-edged obstacle -arrow-

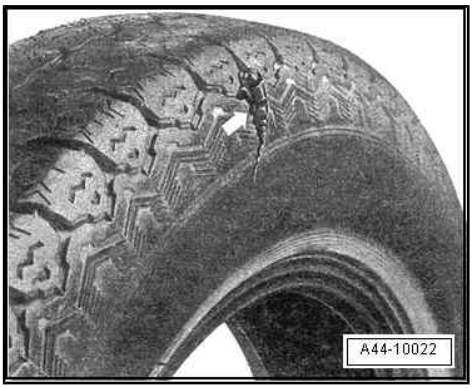

9.5 Damage caused by foreign bodies

Driving over hard, pointed objects like nails, screws and the like can pierce the tyre.

This always leads to tyre damage.

Protected by copyright. Copying for commercial purposes, in part or in whole, is not permitted unless authorised by Volkswagen AG. Volkswagen AG does not guarantee or accept any liability with respect to the correctness and completeness of this document's contents.

satelettronica

Damage due to embedded foreign body

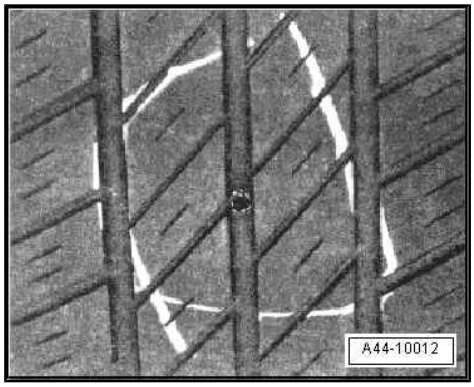

Often, the object -marking- is so securely embedded in the tyre that it will not free itself even at higher speeds. Consequently, it can act as a plug and seal the tyre relatively well. This results in a gradual loss of pressure, which the driver will not notice immediately, but which can lead to sudden and complete tyre failure.

Note

No repair should be attempted on a steel-belted tyre of which the structure has been punctured by a foreign body.

9.6 Loss of air from tyre

If the customer complains of a loss of air from a tyre, it is essential that you check for embedded foreign bodies.

Note

No repair should be attempted on a steel belted tyre of which the structure has been punctured by a foreign body.

Corrosion can develop on the steel wires. This will always lead to the separation of the rubber from the steel belt.

Generally, one cannot determine when the foreign body was embedded. The tyre structure may already have been damaged as a result of driving with insufficient tyre pressure.

Damaged belt wires will sooner or later lead to separation of the rubber from the steel belt. As a result, the tyre can fail completely at some point long after the tyre was first damaged.

Tyre damage caused by foreign bodies is not covered by the warranty.

9.7 Tyre pressure

The tyre pressure must be checked regularly. We recommend checking the tyre pressure every two weeks. The correct tyre pressure is especially important on long trips or when carrying a heavy load. A sporty driving style also requires correct or even slightly increased tyre pressure.

Slow loss of tyre pressure

The slow loss of tyre pressure is especially problematic because even experienced drivers often do not notice it.

Insufficient tyre pressure and the related increase in flexing (internal friction) cause the tyre material to heat up considerably and may lead to the separation of the various components and rubber compounds.

In the end, the tyre is usually destroyed completely ⇒ page 51 .

The cause for the slow pressure loss cannot always be determined because the tyre is severely damaged and structural components of the tyre are missing.

Copyright by Volkswagen AG. Volkswagen AG does not guarantee or accept any liability with respect to the correctness of information in this document. Copying for private or commercial purposes, in part or in whole, is not permitted without the authorisation of Volkswagen AG.
satelettronica

9.8 Tyre damage due to insufficient tyre pressure

The most common causes for tyre failure are minor external damage, a defective valve or a leaking rim due to corrosion or damage.

Separation of carcass and rubber

Excessive heating due to driving with substantially insufficient tyre pressure ⇒ page 52 led to overheating and subsequent separation of the carcass from the rubber material -arrows-.

The tyre shown here was periodically driven with an inflation pressure which was insufficient for the load. Typical evidence for this is the circumferential scuffing along the bead caused by the wheel flange and also the discolouration. Small, furrowed creases are visible along the inside of the sidewall.

When the tyre rolls, strong shear forces develop between the layers of steel cord, especially at the ends of the belts.

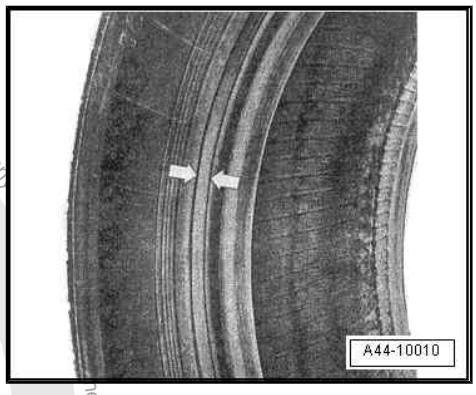

Tyres with wide, circumferential furrows near the bead

Wide, circumferential furrows near the bead -arrows- indicate that the tyre was driven with insufficient pressure.

Driving a vehicle with insufficient tyre pressure or ignoring or not recognising tyre damage can have serious consequences.

The tyre can no longer withstand the forces which develop when the vehicle is driven.

The defects mentioned above severely restrict the function of the tyre. The rubber compounds separate, which results in the partial separation of tyre components or even its complete destruction.

Tyres with stripped profile

Such damage usually develops over a longer period of time. If an already damaged tyre is exposed to high stress, the centrifugal forces which occur at high speeds can tear components off the tyre.

The figure shows a tyre with stripped tread due to travel with insufficient tyre pressure.

Protected by copyright. Copying for private or commercial purposes, in part or in whole, is not permitted unless authorised by Volkswagen AG. Volkswagen AG does not guarantee or accept any liability with respect to the correctness of information in this document. Copyright by Volkswagen AG.
satelettronica

9.9 Rising tyre temperature caused by insufficient inflation pressure

The graph shows the temperature development of a tyre at a speed of 180 km/h.

A - When specified tyre pressure is maintained, the temperature will remain stable.

B - Danger zone: When tyre pressure is 0.3 bar below specification, the temperature rises to above 120°C at higher speeds.

C - Critical temperature threshold: A tyre defect will develop.

T - Temperature in °C

t - Travel time in minutes

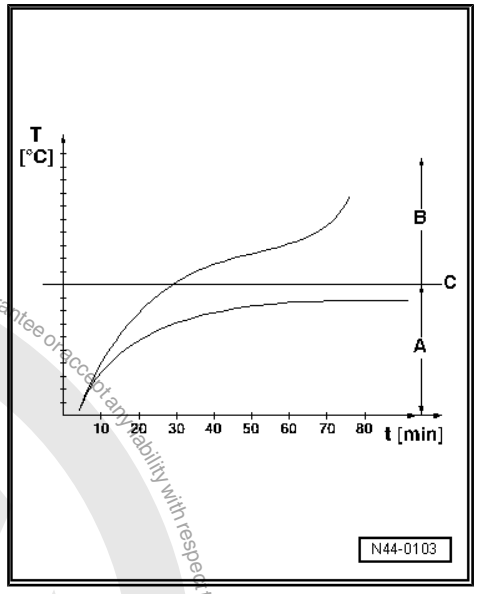

Protected by copyright. Copying for private or commercial purposes, in part or in whole, is not permitted unless authorised by Volkswagen AG. Volkswagen AG does not guarantee or accept any liability with respect to the correctness of information in this document. Copyright by Volkswagen AG.

satelettronica

9.10 Tyre damage due to fitting error (fitting damage)

Bead core broken during tyre inflation.

Modern radial tyres for passenger cars are mounted only on safety rims. Safety rims have a hump -1- running along the bead seat.

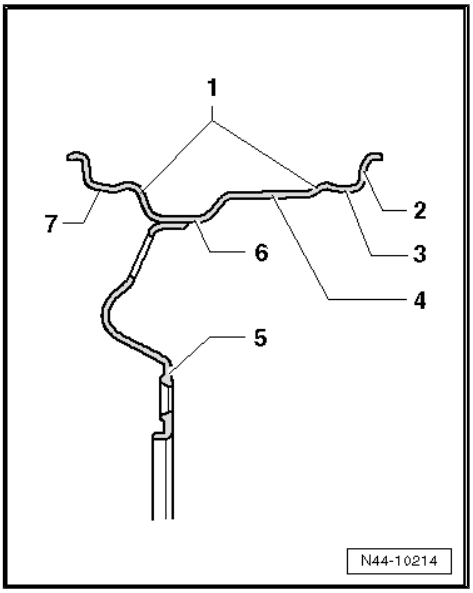

1 - Hump (double hump H 2), extended double hump (EH2)

2 - Wheel rim flange

3 - Inner rim shoulder (e.g. tapered rim shoulder)

4 - Rim

5 - Wheel

6 - Well

7 - Outer rim shoulder (e.g. tapered rim shoulder)

The hump prevents the tyre from being pressed out of the rim shoulder during travel with insufficient tyre pressure.

When the tyre is inflated, the bead of the tyre may not slip completely over the outer rim hump.

In this case, there is a danger of the bead core becoming overstretched if the tyre pressure is too high. The steel wires would then rupture partially or completely. A broken bead core cannot be detected from the outside.

Special requirements for tyres with run-flat properties

Wheel rims with a raised double hump (Extended Hump EH2) are prescribed for tyres with run-flat properties (reinforced side walls) ⇒ page 59 . The raised double hump prevents the deflated tyre from slipping off its seat on the wheel rim when the tyre is run deflated.

Note

To avoid damage, always observe the notes/instructions when fitting/removing tyres with run-flat properties ⇒ Running gear, axles, steering; Rep. gr. 44 ; Fitting and removing tyres with run-flat properties .

WARNING

- ***Tyres with damaged bead cores are not seated safely and securely on the rim. Such tyres are a safety risk!***
- ***In addition, there is a risk of the partly broken bead core breaking apart during continued operation and the tyre could suddenly tear open. If the bead core breaks during inflation, the carcass will also be destroyed.***

Protected by copyright. Copying for private or commercial purposes, in part or in whole, is not permitted unless authorised by Volkswagen AG. Volkswagen AG does not guarantee or accept any liability with respect to the correctness of information in this document. Copyright by Volkswagen AG.
satelettronica

Tyre with broken bead core and destroyed carcass

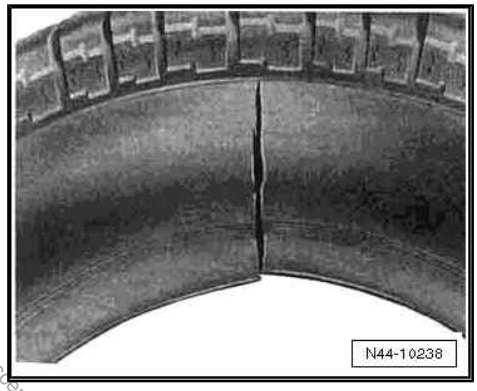

The figure shows a tyre with a broken bead core and destroyed carcass as a result of excess pulling force during fitting.

Bead damage due to faulty or incorrect tyre fitting with tyre-fitting machine

The following errors, which may occur when tyres are fitted, can lead to severe tyre damage:

- If the opposite tyre bead is not seated completely in the rim well when the upper bead is rolled in on the tyre fitting machine. ⇒ page 53.
- If the fitting head is improperly adjusted.
- If the edge of the fitting roller rolls onto the bead.
- If the guide rollers are worn or have sharp edges.

If the tyre bead is split.

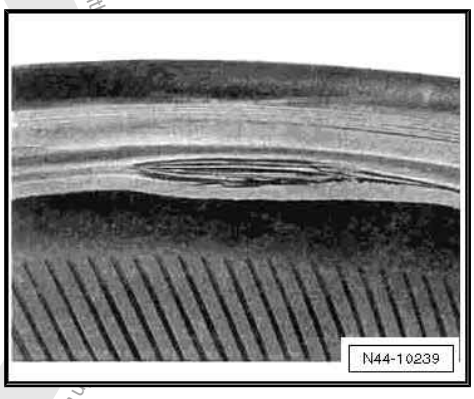

In these cases, the bead, which is under great tension, can be cut into in the direction of rotation, split and/or be pinched off down to the core wire.

It is often possible to identify the tracks of the guide roller as it was applied or ran off where the damage occurred.

Note

Both tyre beads as well as the rim shoulders must always be coated with assembly paste .

If fitting damage remains undetected, there is a danger that the tyre will fail later during operation.

THEREFORE!

- Never fit a tyre without using assembly paste .
- Do not allow the bead seating pressure to exceed 3 bar.
- Do not allow the tyre inflation pressure to exceed 4 bar.
- When the tyre has been fitted, reduce the tyre pressure to the specified value.

Copyright by Volkswagen AG. Volkswagen AG does not guarantee or accept any liability with respect to this document. Copyright by Volkswagen AG. Protected by copyright. Copying for private or commercial purposes, in part or in whole, is not permitted unless authorised by Volkswagen AG.
satelettronica

10 Tyres with run-flat properties

10.1 General

Tyres with run-flat properties have reinforced side walls when comparing them with normal tyres. This reduces the slippage of the side walls and prevents the tyre flanks sticking when the tyres are run deflated. This ensures the vehicle remains controllable and the vehicle has almost normal driving characteristics. The alleviates the necessity to fit the spare wheel in dangerous conditions e.g hard shoulder of a motorway or in bad weather conditions.

A deflated tyre can be driven further to the next workshop (approx. 50 km (approx. 30 miles)) at a suitable speed (max. 80 km/h (max. 50 mph)) and in suitable driving style for the conditions, see ⇒ Owner's wallet .

After checking the respective wheel, the responsibility lies with the driver to decide if it is safe to drive further with the deflated tyre.

-I- Tyres with normal air pressure

1 - Tyres with run-flat properties (reinforced side walls -red-)

2 - Normal tyres

-II- Deflated tyre

When a normal tyre -2- deflates, the side walls are pressed against the wheel rims. The side walls heat up extremely or stick and are therefore destroyed when the tyre is deflated.

Tyres with run-flat properties -1- are supported on the reinforced side walls (-red-). A special tyre mixture and the reduced walkability of the reinforced side walls reduces the heat created when the tyre is run and the vehicle remains controllable.

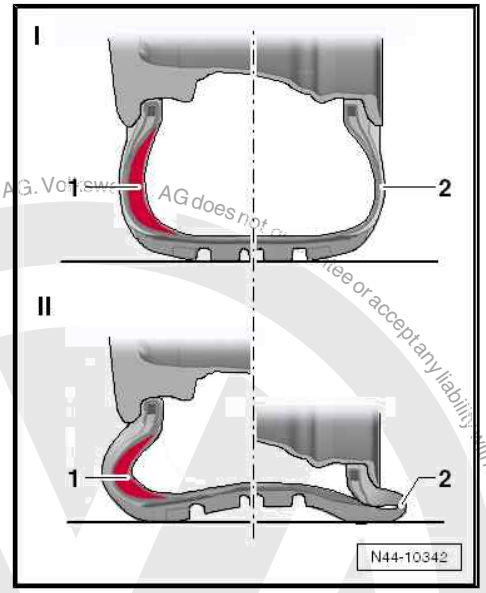

Note

Please note the special requirements when using tyres with run-flat properties ⇒ page 56 .

Protected by copyright. Copying for private or commercial purposes, in part or in whole, is not permitted unless authorised by Volkswagen AG. Volkswagen AG does not guarantee or accept any liability with respect to the correctness of information in this document. Copyright by Volkswagen AG.
satelettronica

10.2 Design and identification

Identification

Distinguishing features: tyres with run-flat properties can be identified by one of the following abbreviations DSST, Euforia, RFT, ROF, RSC, SSR or ZP. The abbreviation is located on the flank of the tyre following the tyre designation of the respective tyre manufacturer.

Body

1 - Beading with beading core

2 - Side wall

3 - Reinforced side wall

4 - Wheel rim with extended hump (EH2) on both sides - prerequisite when using tyres with run-flat properties

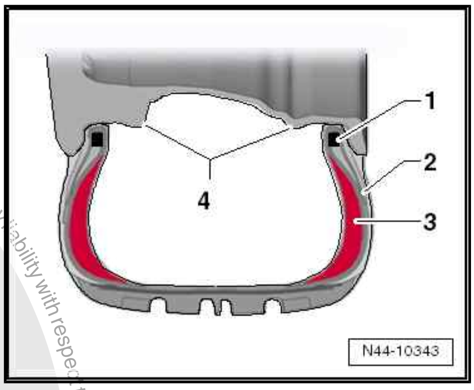

10.3 Retrofitting/requirements when using run-flat tyres

> ⚠ **Caution**
>
> *Retrofitting run-flat tyres to VW models may only be undertaken if the tyres are fitted as standard or they are available as an option.*

These tyres may only be used on vehicles with a tyre pressure monitoring system as a pressure lose in the tyres is not always visible. This system warns the driver when an inflation pressure is less than a certain inflation pressure.

Permitted are:

Direct measuring systems ⇒ Running gear, axles, steering; Rep. gr. 44 ; Tyre pressure monitor

Indirect measuring systems ⇒ Running gear, axles, steering; Rep. gr. 44 ; Tyre pressure monitor

Tyres with run-flat properties may only be fitted on disc-type wheels with raised double hump (Extended Hump - EH2) ⇒ page 59 .

Protected by copyright. Copying for private or commercial purposes, in part or in whole, is not permitted unless authorised by Volkswagen AG. Volkswagen AG does not guarantee or accept any liability with respect to the correctness of information in this document. Copyright by Volkswagen AG.

satelettronica

The special fitting/removal instructions must be observed ⇒ Running gear, axles, steering; Rep. gr. 44 ; Fitting and removing tyres with run-flat properties .

A mixed installation with standard tyres is not permitted, even on same axle.

Only in exceptional circumstances may a standard tyre be fitted e.g. for a short period or a limited distance. The special run-flat characteristics are lost, the driver must always be informed.

Please observe the recommended tyre manufacture
⇒ page 636 and ⇒ page 676 .

10.4 Repairs

WARNING

- *Tyres with run-flat properties must be replaced after they have been run deflated.*
- *The special fitting/removal instructions must be observed ⇒ Running gear, axles, steering; Rep. gr. 44 ; Fitting and removing tyres with run-flat properties .*

General information

- As with standard tyre/wheel systems, the disc-type wheel must also be checked before fitting.
- The disc-type wheel must be checked (for true running, runout and other damage) after a tyre has been run deflated ⇒ page 38 , as a pot-hole etc. could cause damage the disc-type wheel rim.
- Damaged disc-type wheels must be renewed.

Protected by copyright. Copying for private or commercial purposes, in part or in whole, is not permitted unless authorised by Volkswagen AG. Volkswagen AG does not guarantee or accept any liability with respect to the correctness of information in this document. Copyright by Volkswagen AG.
satelettronica

11 Rolling resistance optimised tyres

The energy loss caused by the deformation of the tyre when rolling is known as rolling resistance.

With rolling resistance optimised tyres the deformation is greatly reduced by a revised design and the use of optimised tread compositions.

Volkswagen BlueMotion and BlueMotion technology models are fitted with tyres with an optimised rolling resistance and all other safety and customer relevant properties are of the latest level of development.

The respective approved makes of tyres are listed in the following chapters ⇒ page 636 .

Protected by copyright. Copying for private or commercial purposes, in part or in whole, is not permitted unless authorised by Volkswagen AG. Volkswagen AG does not guarantee or accept any liability with respect to the correctness of information in this document. Copyright by Volkswagen AG.

satelettronica

12 Facts about disc-type wheels (passenger cars)

12.1 Design of disc-type wheel

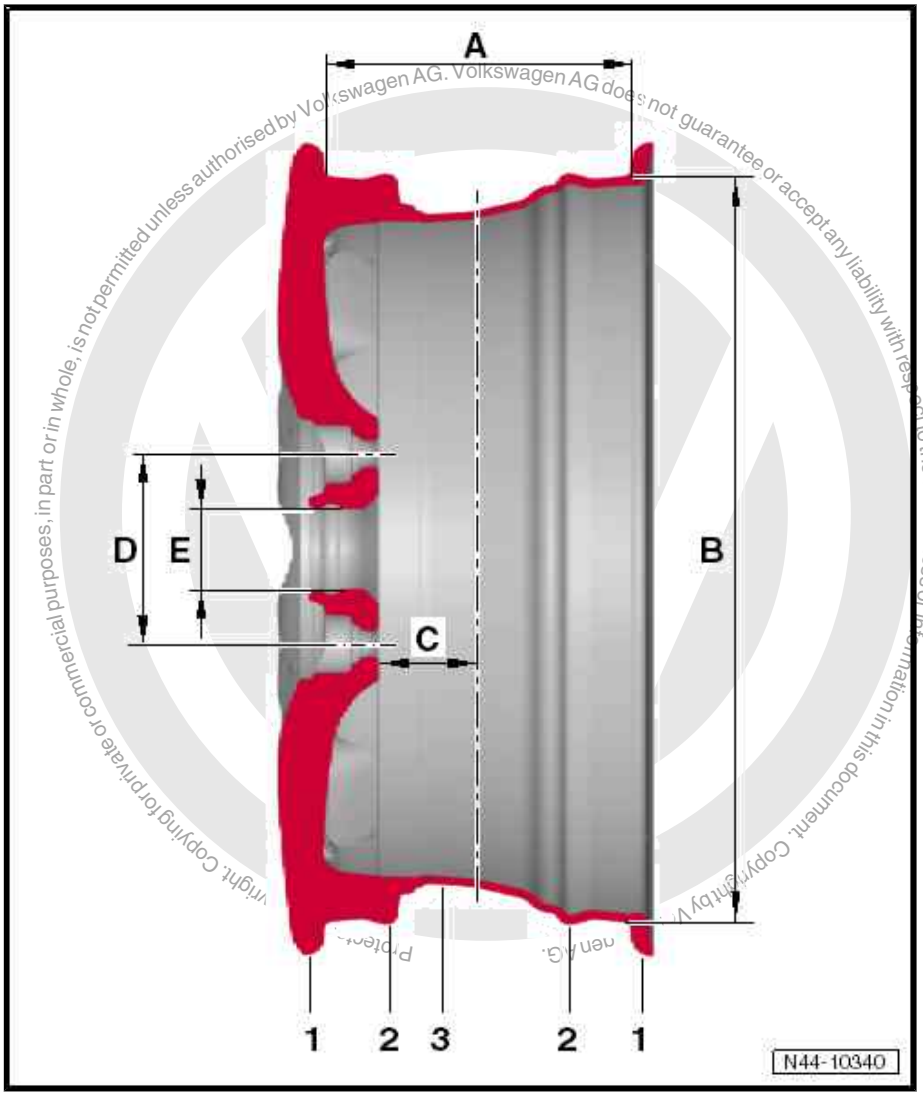

1 - Wheel rim flange

- ❑ Stop for tyre side beading

2 - Hump (H2) on both shoulders of rim

- ❑ Prevents the tyre slipping off the shoulder of the rim while driving through tight bends
- ❑ Extended hump (EH2) - prerequisite when using tyres with run-flat properties ⇒ page 59

3 - Well

- ❑ Eases fitting/removal of tyre

A - Width of wheel rim

- ❑ Distance between tyre contact surfaces on both rim edges of wheel
- ❑ Dimensions in inches

B - Wheel rim diameter

- ❑ Distance between tyre contact surfaces on opposite tyre shoulders
- ❑ Dimensions in inches

C - Wheel offset

- ❑ Vertical distance between centre of wheel and wheel inner contact surface
- ❑ Dimensions in mm

D - Pitch circle diameter

- ❑ Diameter of circle for wheel bolt holes
- ❑ Dimensions in mm

E - Centre hole

- ❑ Used to centralize
- ❑ Dimensions in mm

12.2 Data on wheel rims

There are several items of information on the wheel rims. The following example shows the information needed for unambiguous identification of the wheel:

Part number:	6E0 601 027 A

satelettronica

Wheel size:	6 J x 15 6 - Rim width in inches J - Shape of wheel rim flange 15 - Rim diameter in inches
Wheel offset in mm:	43
Data on hump of rim shoulder:	EH2 Extended Hump [1])

[1]) Raised round hump on both rim shoulders. These ensure that when run-flat tyres are used without air pressure, they will not slip from rim shoulder. Rims with EH2 are required only if tyres with run-flat properties are fitted! ⇒ page 55

12.3 Wheel rims - pitch circle diameter

Pitch circle diameter	Model		
100 mm	All Golf 1992 >	All Vento 1992 >	Fox 2005 >
	All Lupo 1999 >	Lupo 3 L, FSI, GTI	
	All Golf 1998 >	All Bora 1998	
	All Polo 1995 >	All Polo 2002 >	
	New Beetle RSi 2001 >	New Beetle 1999 >	New Beetle Cabriolet 2003 >
	All Passat 1994 >		
112 mm	All Passat 1997 >	Passat W8	Passat Protect
	Golf 2004 >	Golf Plus 2005 >	Cross Golf 2007 >
	All Sharan 1996 >	Passat 2006 >	Golf Variant 2007 >
	Jetta 2006 >		
120 mm	Touareg 2003 >		
130 mm	Touareg 2003 >		

12.4 Split rim composite wheels

Split rim alloy wheels consist of several parts.

The major parts are the rim and the wheel centre. These parts are bolted together with special bolts using a special process. This ensures that the wheel functions properly, that it is sealed and safe and that it runs true. These requirements are not guaranteed with workshop materials and under workshop conditions.

WARNING

You must not dismantle or repair composite wheels!

12.5 Alloy wheels with exchangeable trim elements

These wheels are fitted with exchangeable trim elements. Follow these instructions during installation.

Protected by copyright. Copying for private or commercial purposes, in part or in whole, is not permitted unless authorised by Volkswagen AG. Volkswagen AG does not guarantee or accept any liability with respect to the correctness of information in this document. Copyright by Volkswagen AG.
satelettronica

– Clean the thread in the wheel before screwing in the new bolts.
– Always use new bolts!

1 - Trim element

2 - Hexagon socket head bolt

Torque setting for self-locking hexagon socket head bolts: 5 Nm

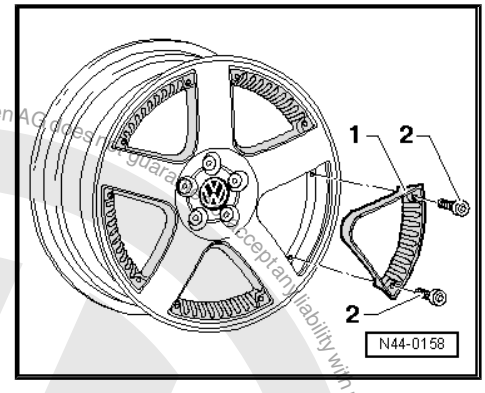

12.6 Alloy wheels with exchangeable trim elements (Zaragoza)

12.6.1 Tools

Special tools and workshop equipment required

♦ Cartridge gun - V.A.G 1628-

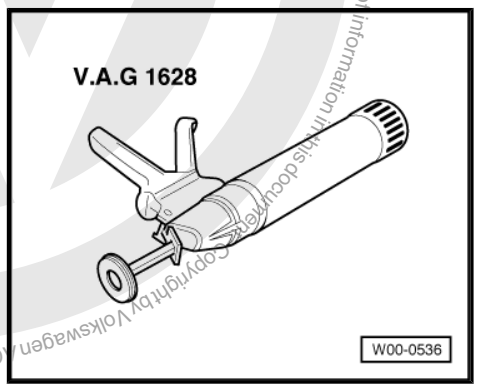

♦ Removal wedge - 3409-

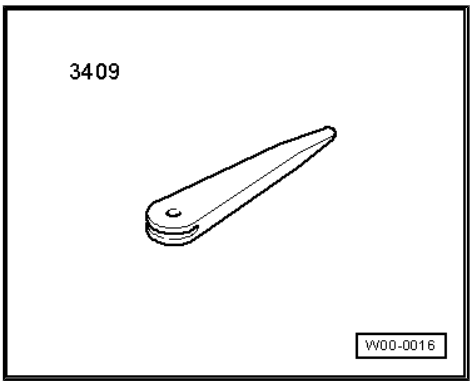

♦ Hot air blower - V.A.G 1416-

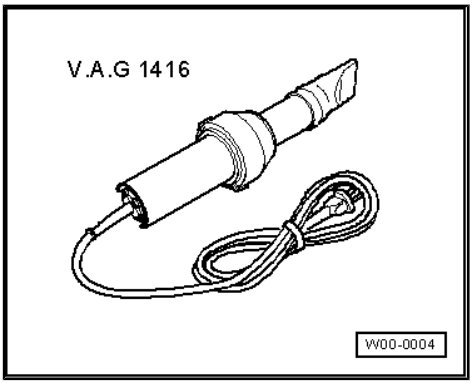

Protected by copyright. Copying for private or commercial purposes, in part or whole, is not permitted unless authorised by Volkswagen AG. Volkswagen AG does not guarantee or accept any liability with respect to the correctness of information in this document. Copyright by Volkswagen AG.
satelettronica

12.6.2 Materials

- 1K Window adhesive -DH 009 100 A2-
- Silicone remover -LSE 020 100 A3-

12.6.3 Installing trim element

These alloy wheels are fitted with exchangeable trim elements.
Follow these instructions during installation.

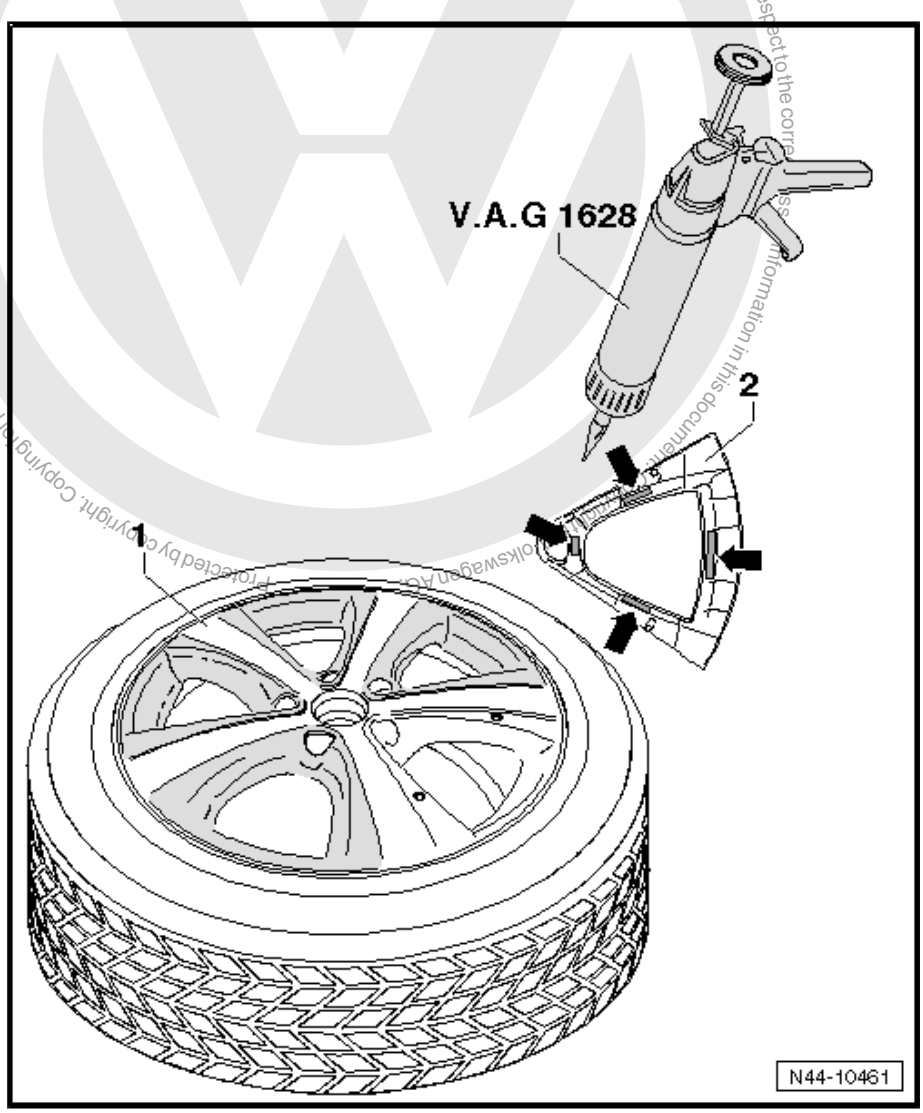

– Apply 1K window adhesive - DH 009 100 A2- to bonding surfaces -arrows- using cartridge gun - V.A.G 1628- .

Volkswagen AG. Volkswagen AG does not guarantee or accept any liability with respect to the correctness of information in this document. Copyright by Volkswagen AG. Protected by copyright. Copying for private or commercial purposes, in part or in whole, is not permitted unless authorised by Volkswagen AG.
satelettronica

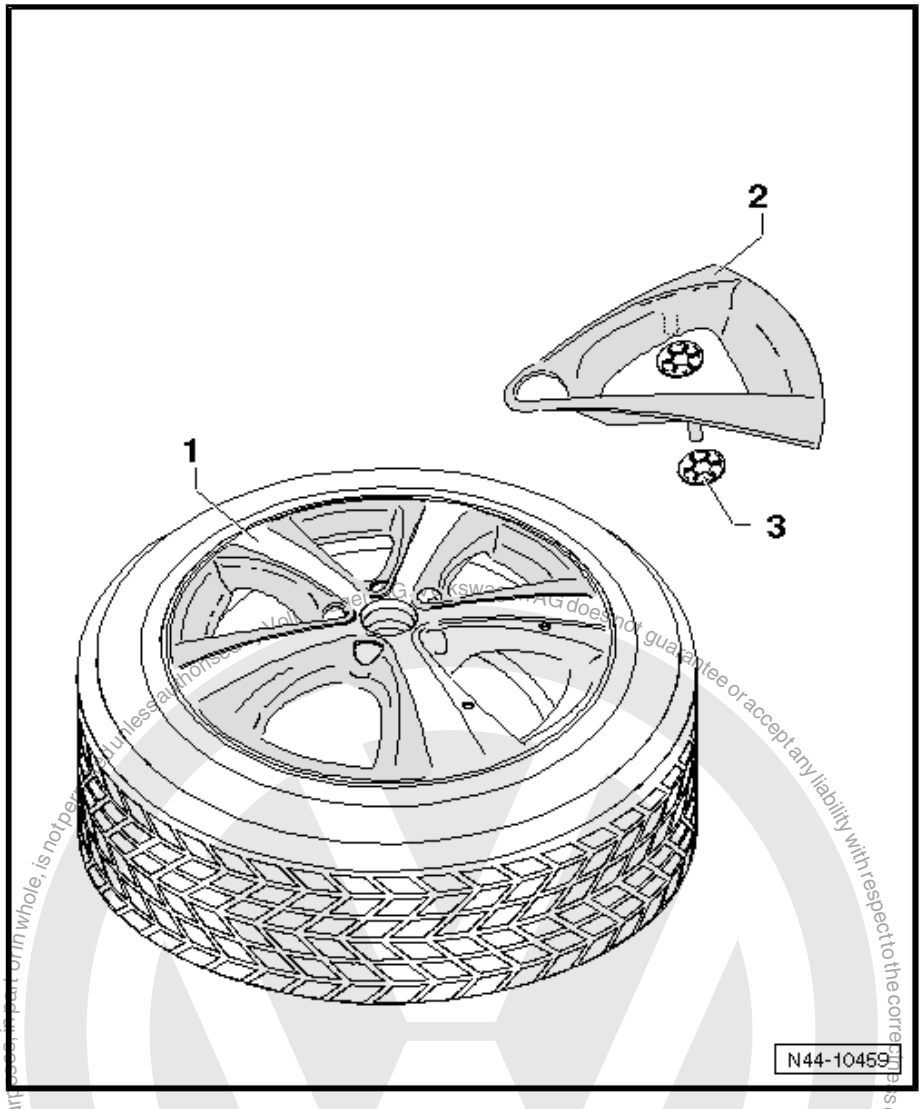

– Push trim element -2- forcefully into alloy wheel -1-.
– Secure trim element -2- on inner side of alloy wheel -3- with clamping washers.

Minimum curing period: 3 hours at a minimum room temperature of 15°C.

> ⚠ WARNING
>
> *Alloy wheel must be rebalanced* *⇒ page 34* *.*

satelettronica

12.6.4 Removing trim element

Note

The trim element cannot be removed without causing damage to the element.

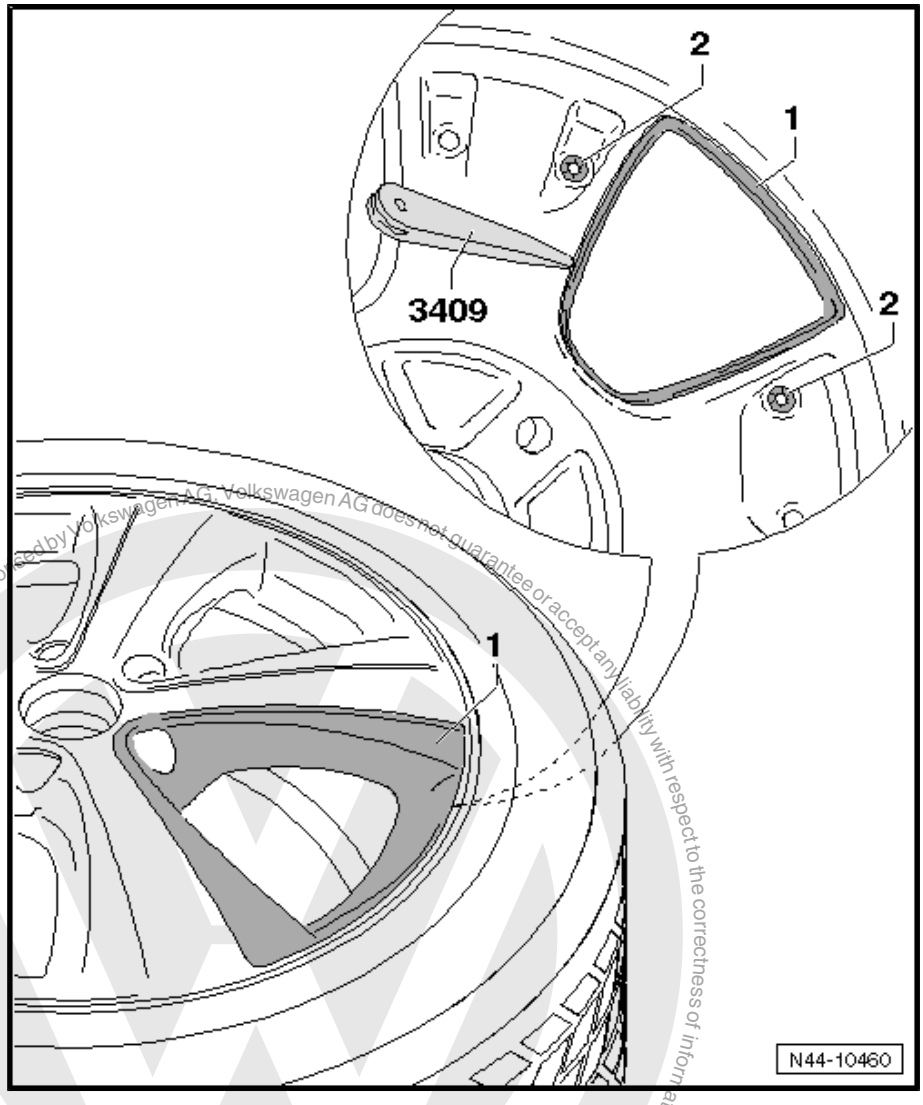

– Remove clamping washers -2- on inner side of alloy wheel.

– Heat outer side of trim element -1- with hot air blower - V.A.G 1416- .

Caution

Use only low heat on tyres and alloy wheels (do not overheat).

– Release trim element -1- on inner side of alloy wheel using wedge - 3409- .

– Grasp under a corner on the outside and pull trim element -1- forcefully off alloy wheel.

Copyright by Volkswagen AG. Volkswagen AG does not guarantee or accept any liability with respect to the correctness of information in this document. Copyright by Volkswagen AG. Reproduced by copyright. Copying for private or commercial purposes, in part or in whole, is not permitted unless authorised by Volkswagen AG.
satelettronica

Note

- *Cut back adhesive PUR beads on alloy wheel.*
- *Residual material is used as a bonding base for the new trim element.*
- *The new trim element can be installed immediately* *⇒ page 62* *.*

12.7 Hub cover for alloy wheels with open threaded connections

Removing

- Wheel removed

Note

Hold cover cap -1- when driving out with hammer.

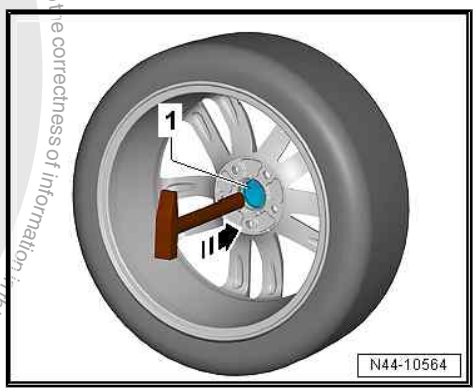

Installing

– Hold cover cap -1- flush against opening in alloy wheel rim.

– Align the Volkswagen emblem on the cover cap to the tyre inflation valve so that the emblem seats centrally over the valve -2-.

– Apply light hand pressure until the cover cap is pushed into the opening of the alloy wheel rim and is secure.

– Check cover cap has no play and that it is seated correctly in the alloy wheel rim.

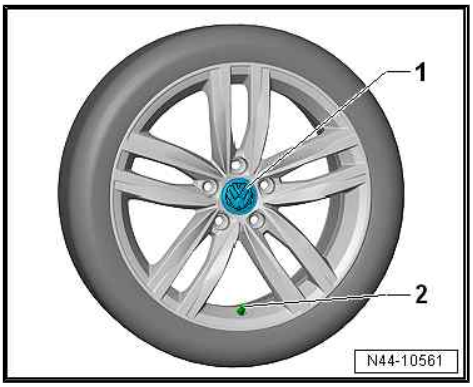

12.8 Care and maintenance of alloy wheel rims

Regular care is required to maintain the decorative appearance of alloy wheels over a long period of time.

In particular road salt and dust from brake abrasion must be thoroughly washed off every 2 weeks; otherwise the finish of the alloy wheel will suffer.

Cleaning agents

Suitable cleaning agents:

- Plain water or water with soft soap
- Water and essence of vinegar
- Alloy wheel cleansers without acids or strong solvents

Do not exceed the soaking time of the cleaning agent.

The shorter the recommended soaking time, the harsher and more aggressive the cleaning agent.

Protected by copyright. Copyright by Volkswagen AG. Volkswagen AG does not guarantee or accept any liability with respect to the correctness of information in this document. Copyright by Volkswagen AG. Reproduction, distribution, publication, translation, storage and processing for commercial purposes, in part or in whole, is not permitted unless authorised by Volkswagen AG.
satelettronica

Damage to finish

If the finish is damaged, for example by stones, the damage must be repaired as quickly as possible ⇒ page 66 .

Removing adhesive residue from glued balance weights on alloy rims

- Strong solvents and acids attack the finish on alloy wheels and the surface of the wheel becomes matt and milky. Therefore, these substances should not be used.
- To remove adhesive residue on alloy wheels, use alloy cleansers or a petrol-based cleanser. Do not exceed the soaking time of the cleaning agent.
- After cleaning or removing adhesive residue from wheels, rinse them with water.

12.9 Restoring alloy wheels

WARNING

- *Repairing a damaged wheel using heat treatment such as welding or the addition or removal of material is absolutely forbidden.*
- *Damaged or deformed wheel rims or wheel rims with cracked or deformed wheel bolt holes may not be repaired.*
- *Restoration may only be undertaken using approved and genuine paint materials.*
- *The manufactures guarantee no longer applies once a wheel rim has been restored.*

Wheel rims with cracks along the edges may not be repaired and must be replaced immediately.

Remachining, heat treatment and welding of all types is not permitted.

Material reforming is not permissible.

Before restoring, the radial runout and lateral runout must not exceed the manufactures tolerance of 0.8 mm.

Only cast alloy wheel rims may be filled using a filler putty. These wheels have the material identification AlSi xx stamped in the inner side.

Forged wheels may not be painted.

The restoration is limited to the painted surfaces.

Bright machined wheels, which only have a clear coating, may not be repaired.

Only surface damage on the viewed side (design surface) of the wheel may be restored.

Restoring a damaged surface depth of 1 mm must not be exceeded.

Only up to 50 mm may be removed/ filler filled on the outer boss.

Protected by copyright. Copying for private or commercial purposes, in part or in whole, is not permitted unless authorised by Volkswagen AG. Volkswagen AG does not guarantee or accept any liability with respect to the correctness of information in this document. Copyright by Volkswagen AG.
satelettronica

12.10 The valve

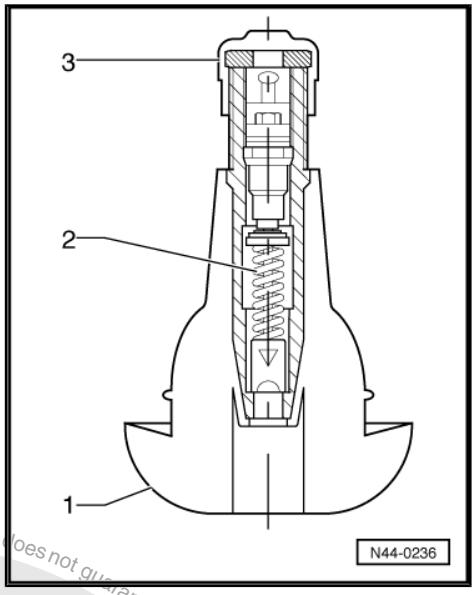

1 - Valve body

2 - Valve core

3 - Valve cap

1. Valve body

The rubber valve for tubeless tyres is designed to create an air-tight seal in the hole in the rim. The elastic material of the rubber valve body presses tightly into the hole in the rim.

In the case of valves with a threaded metal base, a rubber seal is used to seal the rim. The lateral faces of the rim hole are sealing surfaces. They must therefore be free of rust and dirt and must not be damaged.

2. Valve core

The valve insert has the most important job in the valve. It creates a seal and enables the regulation of the air pressure. The small flat seal on the valve core can only function correctly if it is free of foreign particles, dirt and moisture. The compressed air system must be free of water and oil!

3. Valve cap

A valve cap must always be screwed onto the valve. It prevents dirt from getting into the valve. Dirt which may be in the valve would reach the seal of the valve plate when the tyre is inflated and cause a leak.

The valve must be renewed every time a new tyre is fitted.

If the vehicle is driven without caps on the valves, there is the danger that dirt may get into the valve. This leads to a gradual loss of air, which in turn can lead to the destruction of the tyre.

- Separation of carcass and rubber ⇒ page 51
- Wide, circumferential furrows near the bead ⇒ page 51
- Stripped tread or stripped protector ⇒ page 51

WARNING

The valve cap must be fitted tightly to ensure air-tight sealing.

Protected by copyright. Copying for private or commercial purposes, in part or in whole, is not permitted unless authorised by Volkswagen AG. Volkswagen AG does not guarantee or accept any liability with respect to the correctness of information in this document. Copyright by Volkswagen AG.
satelettronica

13 Fitting and removing wheels

13.1 Rotating wheels

Vehicles with front-wheel drive exhibit more tread wear on the front wheels due to the greater forces they have to transmit.

In order for all 4 wheels on the vehicle to have the same service life, we recommend rotating the front and rear wheels and tyres.

Ensure that uni-directional tyres are not reversed.

The longer the tyre runs at one position, the more it wears at certain points. Therefore it is recommended to rotate the wheels at short intervals, for example every 5,000 km.

Diagonal rotation is possible only with non-directional tyres. This method of wheel rotation is especially advantageous in the case of saw-tooth wear ⇒ page 30 .

If saw-tooth wear has already progressed and the tread is worn to more than 50%, only slight improvements would be achieved and rotation is not recommended. The elasticity of the tread blocks declines and the saw-tooth wear does not progress.

13.2 Instructions for changing or fitting wheels

WARNING

Perform the checks and follow the instructions listed below. This is important to ensure that the wheel bolts and the wheels are properly secured.

– Check to ensure that contact surfaces -arrows- on brake disc are free of corrosion and dirt.

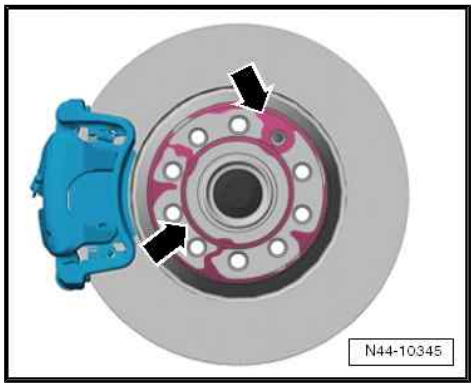

– Check to ensure that contact surface -arrow- on centring seat of brake disc are free of corrosion and dirt.

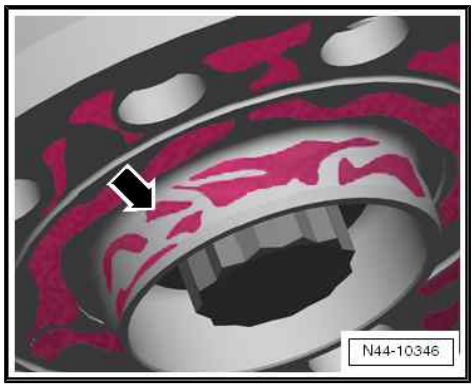

Protected by copyright. Copying for private or commercial purposes, in part or in whole, is not permitted unless authorised by Volkswagen AG. Volkswagen AG does not guarantee or accept any liability with respect to the correctness of information in this document. Copyright by Volkswagen AG.

satelettronica

– Check to ensure that contact surface -arrow- on inner side of wheel (rim) and also centring seat of rim are free of corrosion and dirt.

– The concave seats * in the holes for the wheel bolts and the threads of the wheel bolts must also be free of corrosion and dirt, oil or grease.

* The concave seat is the curved surface of a section of a sphere cut by a plane.

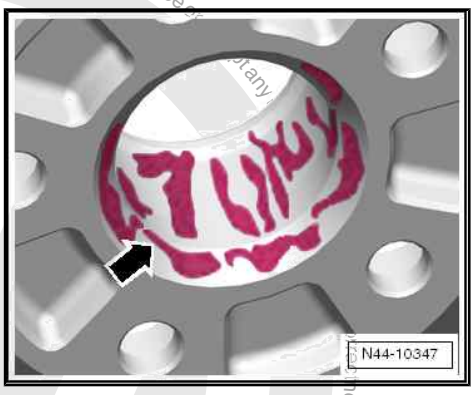

– Check whether the wheel bolts can be easily screwed in by hand. The thread of the wheel bolts must not come into contact with the bore in the brake disc -arrow-.

If the thread of the wheel bolt touches the hole -arrow-, turn the brake disc relative to the wheel hub accordingly.

Remove dirt and corrosion, oil or grease from the contact surfaces, threads in the wheel hub and/or wheel bolts as necessary.

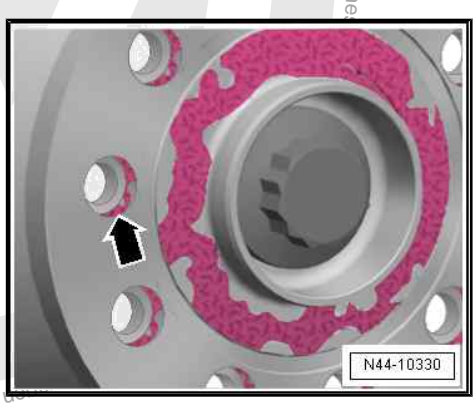

> ⚠ WARNING
>
> *Damaged, badly corroded or difficult to remove wheel bolts must be renewed.*

Fitting wheels

– Preserve wheel centring seat ⇒ Running gear, axles, steering; Rep. gr. 44 ; Protecting wheel centring seat against corrosion .

1 - When fitting the wheel, screw in all wheel bolts uniformly by hand.

2 - Tighten the wheel bolts in diagonal sequence to approx. 30 Nm.

3 - Lower vehicle to the floor and tighten all wheel bolts diagonally to the specified torque using the torque wrench ⇒ Running gear, axles, steering; Rep. gr. 44 ; Specified torque for wheel bolts .

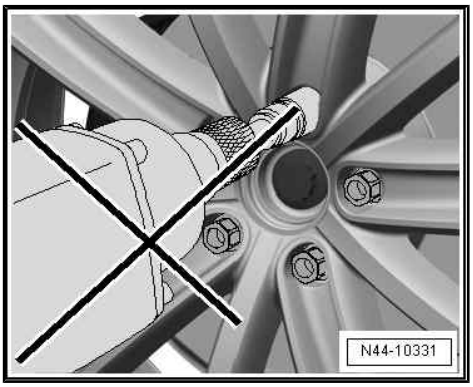

> ⚠ WARNING
>
> *Do not use an impact driver when screwing in the bolts!*

Protected by copyright. Copying for private or commercial purposes, in part or in whole, is not permitted unless authorised by Volkswagen AG. Volkswagen AG does not guarantee or assume any liability for any errors in the text or illustrations.
satelettronica

13.3 Revised wheel bolts for Sharan from model year 2001

Revised wheel bolts were used from model year 2001 and thereafter. These have the same dimensions and torque settings as the previous wheel bolts.

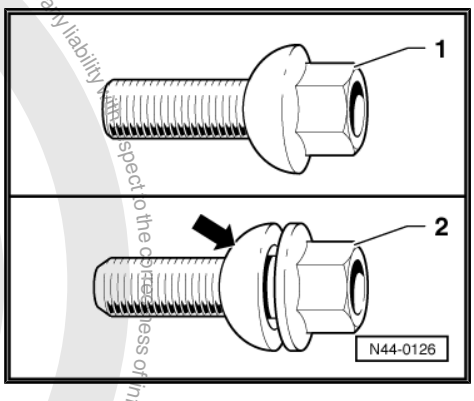

1 - For vehicles through model year 2000

Polished black surface - part no. -701 601 139 B- .

Not permitted on vehicles from model year 2001 or later.

2 - Wheel bolt for vehicles from model year 2001 and later

Collar -arrow- is not fixed in place on the hexagon.

Coated silver-coloured surface - part no. -7M3 601 139 B- .

Not permitted on vehicles to model year 2000.

> **WARNING**
>
> - *The modified wheel bolts are not permitted on vehicles produced to model year 2000.*
> - *Wheel rims from vehicles produced to model year 2000 are not permitted on vehicles from model year 2001 or later.*

13.4 Notes on use of temporary spare wheels

Inform your customers about the following notes and, if appropriate, refer also to the user's manual of the vehicle as the need arises.

The following notes also apply to spare wheels, e.g. 7 J x 16 with 205/55 R 16 tyres, marked with a yellow sticker with the text “MAX 80 km/h” or “MAX 50 mph”

Protected by copyright. Copyright by Volkswagen AG.
Volkswagen AG does not guarantee or accept any liability with respect to the correctness of information in this document.
satelettronica

Note

- *Depending on vehicle equipment, e.g. Passat cars with alloy wheels and 225 mm tyres have a spare wheel with the sticker described above instead of a temporary spare wheel.*
- *The spare wheel or temporary spare wheel is intended only for temporary use over short distances. Therefore, it must be replaces by a normal wheel as quickly as possible.*
- *After the temporary or spare wheel has been fitted, the tyre pressure must be checked as soon as possible. For the correct tyre pressure, please refer to the tyre pressure in the relevant vehicle or the relevant manual: Maintenance manual.*
- *Always observe the speed warning on the temporary spare wheel ("MAX 80 km/h" or "MAX 50 mph").*
- *Full acceleration, hard braking and driving fast through curves should be avoided.*
- *Never drive with more than one spare wheel or temporary spare wheel.*
- *The use of snow chains on the temporary spare wheel is not permitted for technical reasons.*
- *If it is necessary to travel with snow chains, the temporary spare wheel must be fitted on the rear axle even if the front tyre has been damaged. The now available rear wheel must then be fitted in place of the defective front wheel.*

Protected by copyright. Copying for private or commercial purposes, in part or in whole, is not permitted unless authorised by Volkswagen AG. Volkswagen AG does not guarantee or accept any liability with respect to the correctness of information in this document. Copyright by Volkswagen AG.
satelettronica

14 Lupo 3L, Lupo FSI, Lupo GTI from model year 1999

General

Volkswagen vehicles are built according to the latest findings in safety engineering. To keep it that way, we recommend the use of only genuine Volkswagen spare parts. You can recognise this by the VW Audi logo and by the part number. It has been established that these parts are reliable, safe and suitable.

Despite constant appraisal of the market, we cannot assess other products on these points, even when in isolated cases they have been passed by official inspectors or have been granted official approval. Therefore, we cannot, of course, assume any liability if these products are installed.

> ⚠ **WARNING**
>
> *The products from Volkswagen genuine parts and Votex genuine accessories may differ in fitting requirements, torque specifications and so on.*
>
> *Always follow the respective fitting and operating instructions.*

The wheel and tyre combinations or changes listed in the vehicle tables refer exclusively to Volkswagen Genuine wheels. Approval of wheel and tyre combinations or a change to wheels from the accessories trade is not possible with the parts certificate attached here.

> ⚠ **WARNING**
>
> *The fitting instructions and torque specifications for wheels from Votex genuine accessories may differ from those intended for wheels from Volkswagen genuine parts.*
>
> *Therefore, always observe the torque settings for the wheel bolts as well as the respective fitting and operating instructions.*

14.1 Lupo 3L, type 6E model year 1999 to model year 2006

Appendix for parts certificate 1903/05

Type Approval No.: e1*98/14*0114*00 to e1*98/14*0114*10

Type Approval No.: e1*2001/116*0114*11 to e1*2001/116*0114*14

Overview

Model engine output	Tyres	Tyre size	Wheel rim	Off-set in mm	Snow chains	Remarks
1.2l 45 kW	Standard tyres	155/65 R 14 75S	4 J x 14 ⇒ page 73	35	Yes	General information on: ♦ Winter tyres ⇒ page 15 ♦ Snow chains ⇒ page 18
		155/65 R 14 75S	$4^1/_2$ J x 14 ⇒ page 73	38	Yes	

Protected by copyright. Copyright by Volkswagen AG.
Volkswagen AG. Volkswagen AG does not accept any liability with respect to the correctness of information in this document. Copyright by Volkswagen AG. Protected by copyright. Copying, in part or in whole, is only permitted with the express authorised by Volkswagen AG.
satelettronica

Model engine output	Tyres	Tyre size	Wheel rim	Off-set in mm	Snow chains	Remarks
		155/65 R 14 75S	5 J x 14 ⇒ page 74	40	Yes	Tyre makes recommended by Volkswagen: ◆ Summer tyres ⇒ page 636 ◆ Winter tyres ⇒ page 676
	Modification	No changes are permissible apart from the standard wheel and tyre combinations!				
	Winter tyres	155/65 R 14 75Q/T	5 J x 14 ⇒ page 74	40	Yes	

Tyre pressures can be found on the inside of the fuel tank flap or in ⇒ Maintenance ; Booklet 13.1

14.2 Wheel allocation for Lupo 3L, type 6E model year 1999 to model year 2006

Explanation of information on wheels ⇒ page 59

Torque specifications for wheel bolts ⇒ Running gear, axles, steering - Lupo 3 L, Lupo FSI, Lupo GTI; Rep. gr. 44 ; Torque specifications for wheel bolts

Pitch circle diameter:	100 mm
Number of wheel bolt holes:	4

14.2.1 4 J x 14

Caution

Observe the allocation of wheels and tyres to the respective engines, which are listed in the overview table ⇒ page 72 .

6E0 601 025 - Wheel and tyre combination ⇒ page 72

Size:	4 J x 14
Wheel offset in mm:	35
Wheel load in kg:	400

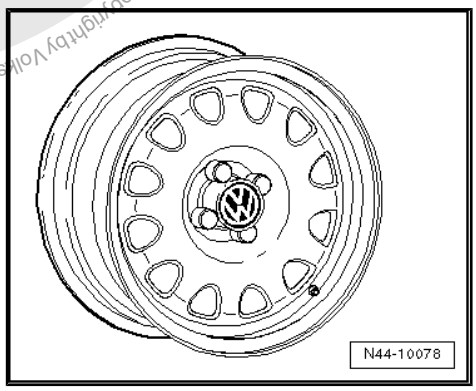

14.2.2 4 1/2 J x 14

Caution

Observe the allocation of wheels and tyres to the respective engines, which are listed in the overview table ⇒ page 72 .

Protected by copyright. Copying for private or commercial purposes, in any form or medium without permission of Volkswagen AG, is prohibited unless authorised by Volkswagen AG. Volkswagen AG does not guarantee or accept any liability with respect to the correctness of information in this document. Copyright by Volkswagen AG.
satelettronica

6E0 601 025 D - Wheel and tyre combination ⇒ page 72

Size:	$4^1/_2$ J x 14
Wheel offset in mm:	38
Wheel load in kg:	400

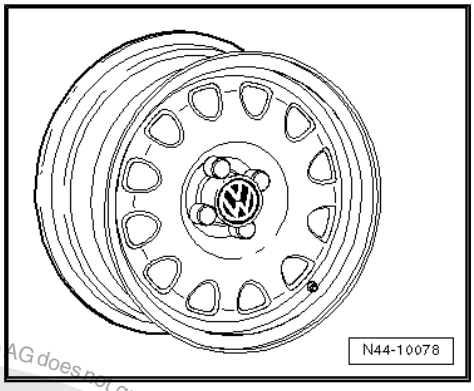

14.2.3 5 J x 14

Caution

Observe the allocation of wheels and tyres to the respective engines, which are listed in the overview table ⇒ page 72 *.*

6E0 601 027 A - Wheel and tyre combination ⇒ page 73

Size:	5 J x 14
Wheel offset in mm:	40
Wheel load in kg:	420

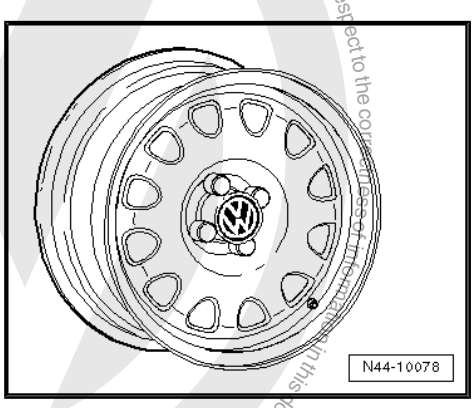

14.3 Lupo FSI, type 6E model year 2001 to model year 2006

Appendix for parts certificate 1903/05

Type Approval No.: e1*98/14*0114*05 to e1*98/14*0114*10

Type Approval No.: e1*2001/116*0114*11 to e1*2001/116*0114*13

Overview

Model engine output	Tyres	Tyre size	Wheel rim	Off-set in mm	Snow chains	Remarks
1.4l 77 kW	Standard tyres	175/60 R 14 79H	5 J x 14 ⇒ page 75	38	Yes* ⇒ page 74	* Snow chains: Only the listed snow chains are approved! Article No. ⇒ page 75
	Modification	185/55 R 14 80H/V	6 J x 14 ⇒ page 76	43	No	General information on: ♦ Winter tyres ⇒ page 15 ♦ Snow chains ⇒ page 18

Protected by copyright. Copyright by Volkswagen AG. Copying for private or commercial purposes, in part or in whole, is not permitted unless authorised by Volkswagen AG. Volkswagen AG does not guarantee or accept any liability with respect to the correctness of the information in this document.
satelettronica

Model engine output	Tyres	Tyre size	Wheel rim	Off-set in mm	Snow chains	Remarks
	Winter tyres	155/65 R 14 75S	5 J x 14 ⇒ page 75	40	Yes	Tyre makes recommended by Volkswagen: ◆ Summer tyres ⇒ page 636 ◆ Winter tyres ⇒ page 676

Tyre pressures can be found on the inside of the fuel tank flap or in ⇒ Maintenance ; Booklet 13.1

The following snow chains are only permissible in combination with the adjacent wheel and tyre combination!

Chain manufacturer Item no.	Accessory part number	Tyre size	Wheel rim	Part no.
Rud 4414437	000 091 386 A	175/60 R 14 79H	5 J x 14 offset 38	6E0 601 025 F
Ottinger 100 458	Z 091 300			

14.4 Wheel allocation for Lupo FSI, type 6E model year 2001 to model year 2006

Explanation of information on wheels ⇒ page 59

Torque specifications for wheel bolts ⇒ Running gear, axles, steering - Lupo 3 L, Lupo FSI, Lupo GTI; Rep. gr. 44 ; Torque specifications for wheel bolts

Pitch circle diameter:	100 mm
Number of wheel bolt holes:	4

14.4.1 5 J x 14

Caution

Observe the allocation of wheels and tyres to the respective engines, which are listed in the overview table ⇒ page 74 .

6E0 601 025 F - Wheel and tyre combination ⇒ page 74

Size:	5 J x 14
Wheel offset in mm:	38
Wheel load in kg:	400

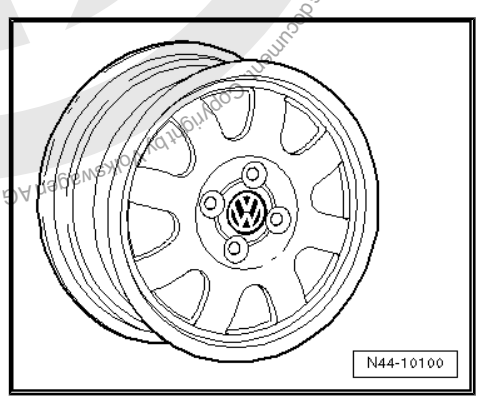

Protected by copyright. Copying for private or commercial purposes, in part or in whole, is not permitted unless authorised by Volkswagen AG. Volkswagen AG does not guarantee or accept any liability with respect to the correctness of information in this document. Copyright by Volkswagen AG.
satelettronica

6E0 601 027 A - Wheel and tyre combination ⇒ page 75

Size:	5 J x 14
Wheel offset in mm:	40
Wheel load in kg:	420

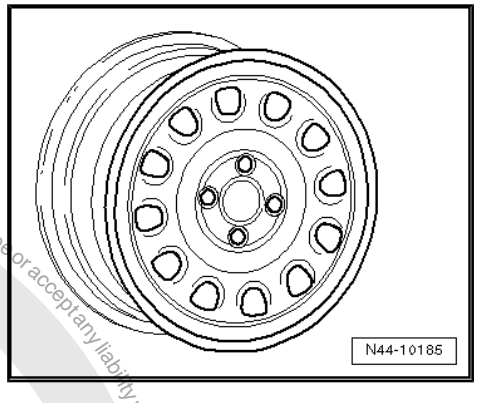

14.4.2 6 J x 14

Caution

Observe the allocation of wheels and tyres to the respective engines, which are listed in the overview table ⇒ page 74 *.*

1H0 601 027 A - Wheel and tyre combination ⇒ page 74

Size:	6 J x 14
Wheel offset in mm:	43
Wheel load in kg:	500

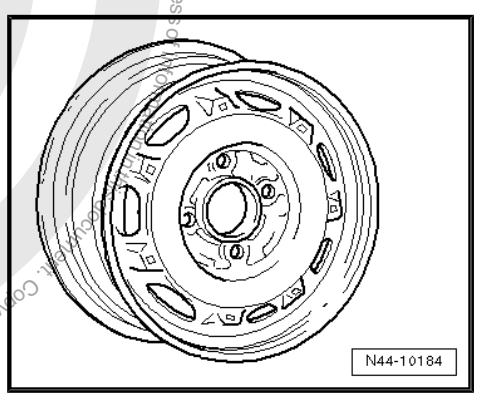

6X0 601 025 - Wheel and tyre combination ⇒ page 74

Size:	6 J x 14
Wheel offset in mm:	43
Wheel load in kg:	415

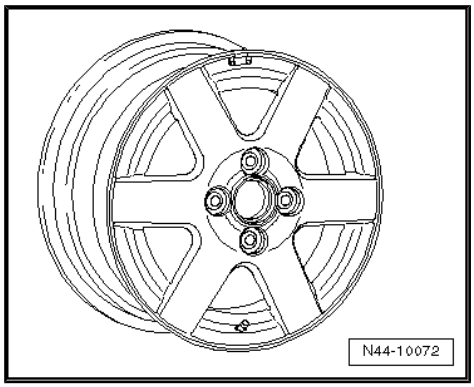

6X0 601 025 A - Wheel and tyre combination ⇒ page 74

Size:	6 J x 14
Wheel offset in mm:	43
Wheel load in kg:	425

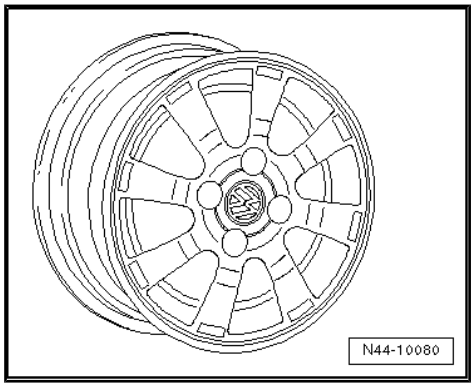

Protected by copyright. Copying for private or commercial purposes, in part or in whole, is not permitted unless authorised by Volkswagen AG. Volkswagen AG does not guarantee or accept any liability with respect to the correctness of information. Copyright by Volkswagen AG.
satelettronica

6X0 601 025 D - Wheel and tyre combination ⇒ page 74

Size:	6 J x 14
Wheel offset in mm:	43
Wheel load in kg:	475

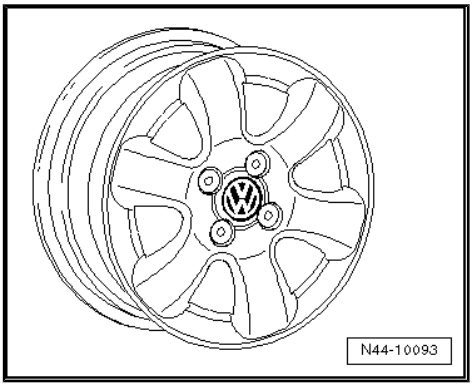

6X0 601 025 D - Wheel and tyre combination ⇒ page 74

Size:	6 J x 14
Wheel offset in mm:	43
Wheel load in kg:	425

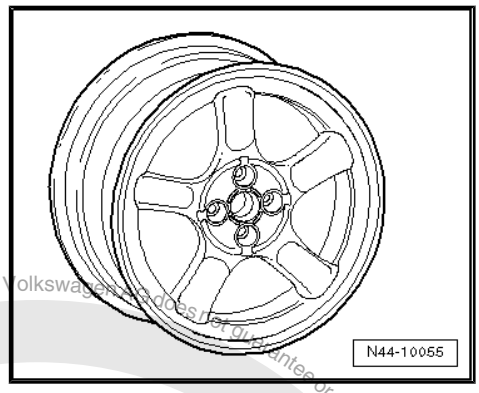

14.5 Lupo GTI, type 6ES model year 2001 to model year 2006

Appendix for parts certificate 1903/05

Type Approval No. e1*98/14*0147*00 to e1*98/14*0147*03

Type Approval No.: e1*2001/116*0147*04 to e1*2001/116*0147*08

Overview

Model engine output	Tyres	Tyre size	Wheel rim	Off-set in mm	Snow chains	Remarks
1.6l 92 kW	Standard tyres	185/55 R 14 80V	6 J x 14 ⇒ page 78	43	Yes	Snow chains: Only the snow chains listed are permissible! Article No. ⇒ page 78
	Standard tyres from model year 2003	205/45 R 15 81V	6 1/2 J x 15 ⇒ page 79	43	No	General information on: ◆ Winter tyres ⇒ page 15 ◆ Snow chains ⇒ page 18
	Modification	205/45 R 15 81V	6 1/2 J x 15 ⇒ page 79	43	No	Tyre makes recommended by Volkswagen:
	Winter tyres	185/55 R 14 80T	6 J x 14 ⇒ page 78	43	Yes	◆ Summer tyres ⇒ page 636 ◆ Winter tyres ⇒ page 676

Tyre pressures can be found on the inside of the fuel tank flap or in ⇒ Maintenance ; Booklet 13.1

Protected by copyright. Copying for private or commercial purposes, in part or in whole, is not permitted unless authorised by Volkswagen AG. Volkswagen AG does not guarantee or accept any liability with respect to the correctness of information in this document. Copyright by Volkswagen AG.
satelettronica

The following snow chains are only permissible in combination with the adjacent wheel and tyre combination!

Chain manufacturer Item no.	Accessory part number	Tyre size	Wheel rim	Part no.
Rud 4414437	000 091 386 A	185/55 R 14 80V/T	6 J x 14 offset 43	6X0 601 027 A
Ottinger 100 458	Z 091 300			

14.6 Wheel allocation for Lupo GTI, type 6ES model year 2001 to model year 2006

Explanation of information on wheels ⇒ page 59

Torque specifications for wheel bolts ⇒ Running gear, axles, steering - Lupo 3 L, Lupo FSI, Lupo GTI; Rep. gr. 44 ; Torque specifications for wheel bolts

Pitch circle diameter:	100 mm
Number of wheel bolt holes:	4

14.6.1 6 J x 14

Caution

Observe the allocation of wheels and tyres to the respective engines, which are listed in the overview table *⇒ page 77*.

1H0 601 027 A - Wheel and tyre combination ⇒ page 77

Size:	6 J x 14
Wheel offset in mm:	43
Wheel load in kg:	500

Winter wheel

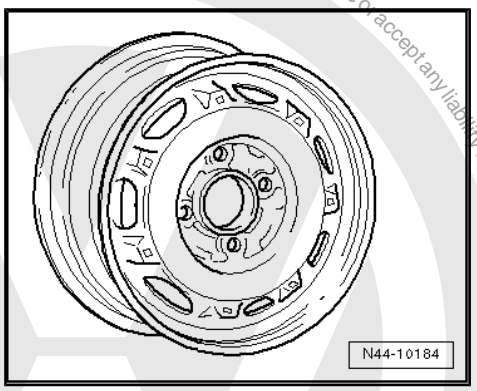

6X0 601 027 A - Wheel and tyre combination ⇒ page 77

Size:	6 J x 14
Wheel offset in mm:	43
Wheel load in kg:	475

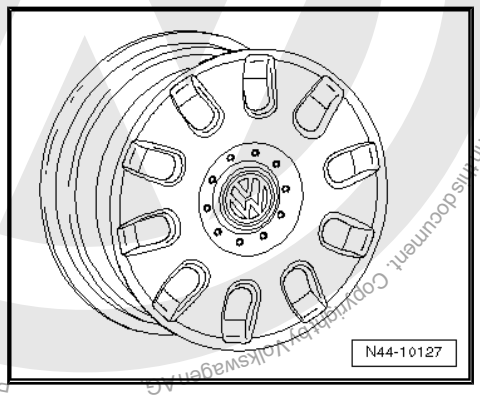

Protected by copyright. Copying for private or commercial purposes, in part or in whole, is not permitted unless authorised by Volkswagen AG. Volkswagen AG does not guarantee or accept any liability with respect to the correctness of information in this document. Copyright by Volkswagen AG.
satelettronica

14.6.2 6 1/2 J x 15

Caution

Observe the allocation of wheels and tyres to the respective engines, which are listed in the overview table ⇒ page 77 *.*

6E0 601 025 A - Wheel and tyre combination ⇒ page 77

Size:	6 1/2 J x 15
Wheel offset in mm:	43
Wheel load in kg:	400

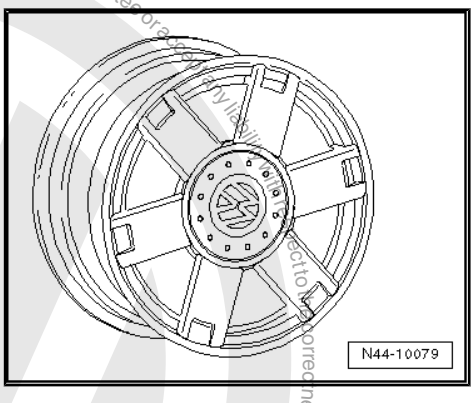

6E0 601 025 E - Wheel and tyre combination ⇒ page 77

Size:	6 1/2 J x 15
Wheel offset in mm:	43
Wheel load in kg:	400

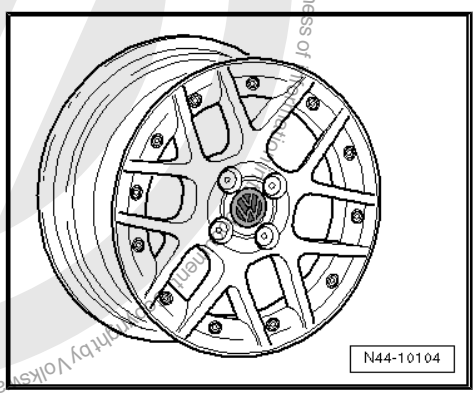

Protected by copyright. Copying for private or commercial purposes, in part or in whole, is not permitted unless authorised by Volkswagen AG. Volkswagen AG does not guarantee or accept any liability with respect to the correctness of information.
satelettronica

15 Lupo model year 1999 to model year 2005

General

Volkswagen vehicles are built according to the latest findings in safety engineering. To keep it that way, we recommend the use of only genuine Volkswagen spare parts. You can recognise this by the VW Audi logo and by the part number. It has been established that these parts are reliable, safe and suitable.

Despite constant appraisal of the market, we cannot assess other products on these points, even when in isolated cases they have been passed by official inspectors or have been granted official approval. Therefore, we cannot, of course, assume any liability if these products are installed.

WARNING

The products from Volkswagen genuine parts and Votex genuine accessories may differ in fitting requirements, torque specifications and so on.

Always follow the respective fitting and operating instructions.

The wheel and tyre combinations or changes listed in the vehicle tables refer exclusively to Volkswagen Genuine wheels. Approval of wheel and tyre combinations or a change to wheels from the accessories trade is not possible with the parts certificate attached here.

WARNING

The fitting instructions and torque specifications for wheels from Votex genuine accessories may differ from those intended for wheels from Volkswagen genuine parts.

Therefore, always observe the torque settings for the wheel bolts as well as the respective fitting and operating instructions.

Protected by copyright. Copying for private or commercial purposes, in part or in whole, is not permitted unless authorised by Volkswagen AG. Volkswagen AG does not guarantee or accept any liability with respect to the correctness of information in this document. Copyright by Volkswagen AG.

satelettronica

15.1 Lupo, type 6X model year 1999 to model year 2005

Appendix for parts certificate 1903/05

Type Approval No.: e1*97/27*0085*00 to e1*97/27*0085*02

Type Approval No.: e1*98/14*0085*03 to e1*98/14*0085*13

Type Approval No.: e1*2001/116*0085*14 to e1*2001/116*0085*17

Overview

Model engine output	Tyres	Tyre size	Wheel rim	Off-set in mm	Snow chains	Remarks
37 kW , 44 kW petrol engine without air conditioning	Standard tyres	155/70 R 13 75S	$4^1/_2$ J x 13 ⇒ page 82	35	Yes	Tyres 185/55 R 14 or 195/45 R 15 are permitted only on vehicles with PAS
	Modification	175/65 R 13 80S/T	$5^1/_2$ J x 13 ⇒ page 83	43	Yes	

Model engine output	Tyres	Tyre size	Wheel rim	Off-set in mm	Snow chains	Remarks
		185/55 R 14 79T	6 J x 14 ⇒ page 84	43	Yes	
		185/55 R 14 79H	6 J x 14 ⇒ page 84	43	Yes	
		195/45 R 15 78H/V	6 J x 15 ⇒ page 86	43/45	Yes	
	Winter tyres	155/70 R 13 75Q	$4^1/_2$ J x 13 ⇒ page 82	35	Yes	General information on: ◆ Winter tyres ⇒ page 15 ◆ Snow chains ⇒ page 18
37 kW with air conditioning; 44 kW petrol and diesel engines; 55 kW petrol engines with automatic gearboxes	Standard tyres	175/65 R 13 80S	$5^1/_2$ J x 13 ⇒ page 83	43	Yes	Tyre makes recommended by Volkswagen: ◆ Summer tyres ⇒ page 636 ◆ All-season tyres ⇒ page 667 ◆ Winter tyres ⇒ page 677
	Modification	175/65 R 13 80T	$5^1/_2$ J x 13 ⇒ page 83	43	Yes	
		185/55 R 14 79T	6 J x 14 ⇒ page 84	43	Yes	
		185/55 R 14 79H	6 J x 14 ⇒ page 84	43	Yes	
		195/45 R 15 78H	6 J x 15 ⇒ page 86	43/45	No	
	Winter tyres	175/65 R 13 80Q	$5^1/_2$ J x 13 ⇒ page 83	43	Yes	
55 kW petrol engine with manual gearbox	Standard tyres	175/65 R 13 80T	$5^1/_2$ J x 13 ⇒ page 83	43	Yes	
	Modification	185/55 R 14 79T	6 J x 14 ⇒ page 84	43	Yes	
		185/55 R 14 79H	6 J x 14 ⇒ page 84	43	Yes	
		195/45 R 15 78H	6 J x 15 ⇒ page 86	43/45	No	
	Winter tyres	175/65 R 13 80Q	$5^1/_2$ J x 13 ⇒ page 83	43	Yes	
55 kW TDI;	Standard tyres	185/55 R 14 79/80H	6 J x 14 ⇒ page 84	43	Yes	Snow chains:

Volkswagen AG. Volkswagen AG does not guarantee or accept any liability with respect to the correctness of information in this document. Copyright by Volkswagen AG. Protected by copyright. Copying for private or commercial purposes, in part or in whole, is not permitted unless authorised by Volkswagen AG.

satelettronica

Model engine output	Tyres	Tyre size	Wheel rim	Off-set in mm	Snow chains	Remarks
74 kW 16V	Modification	195/45 R 15 78H/V	6 J x 15 ⇒ page 86	43/45	No	Only the snow chains listed are permitted! Article No. ⇒ page 82
	Winter tyres	185/55 R 14 79T	6 J x 14 ⇒ page 84	43	Yes	

Tyre pressures can be found on the inside of the fuel tank flap or in ⇒ Maintenance ; Booklet 13.1

Snow chains approved for Lupo 55 kW TDI and 74 kW 16 V

The following snow chains are only permissible in combination with the adjacent wheel and tyre combination!

Chain manufacturer Item no.	Accessory part number	Tyre size	Wheel rim	Part no.
Rud 4414437	000 091 386 A	185/55 R 14 79/80H/T	6 J x 14 offset 43	1H0 601 027 A
Ottinger 100 458	Z 091 300			

15.2 Wheel allocation for Lupo, type 6X model year 1999 to model year 2005

Explanation of information on wheels ⇒ page 59

Torque settings for wheel bolts ⇒ Running gear, axles, steering; Rep. gr. 44 ; Torque settings for wheel bolts

Pitch circle diameter: 100 mm

Number of wheel bolt holes: 4

15.2.1 4 1/2 J x 13

Caution

Observe the allocation of wheels and tyres to the respective engines, which are listed in the overview table ⇒ page 80 .

For 37 kW and 44 kW petrol engines without air conditioning

6N0 601 025 E - Wheel and tyre combination ⇒ page 80

Size:	4 1/2 J x 13
Wheel offset in mm:	35
Wheel load in kg:	390

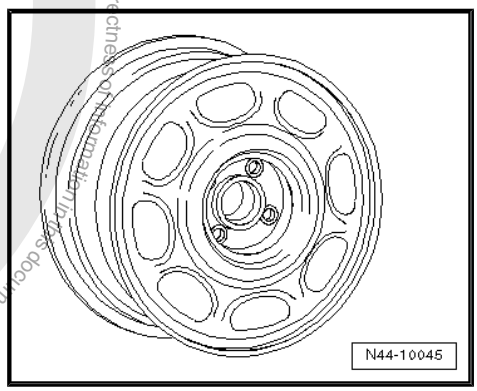

Protected by copyright. Copyright for private or commercial purposes, in part or in whole, is not permitted unless authorised by Volkswagen AG. Volkswagen AG does not guarantee or accept any liability with respect to the correctness of information in this document. Copyright by Volkswagen AG.
satelettronica

6N0 601 027 C - Wheel and tyre combination ⇒ page 80

Size:	4 1/2 J x 13
Wheel offset in mm:	35
Wheel load in kg:	425

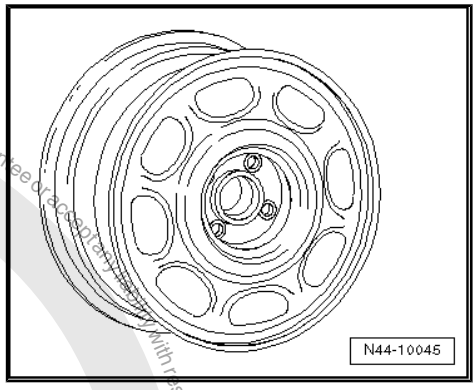

15.2.2 5 1/2 J x 13

Caution

Observe the allocation of wheels and tyres to the respective engines, which are listed in the overview table *⇒ page 80* *.*

For all 37 kW, 44 kW and 55 kW petrol and 44 kW diesel engines

6N0 601 025 A - Wheel and tyre combination ⇒ page 80

Size:	5 1/2 J x 13
Wheel offset in mm:	43
Wheel load in kg:	415

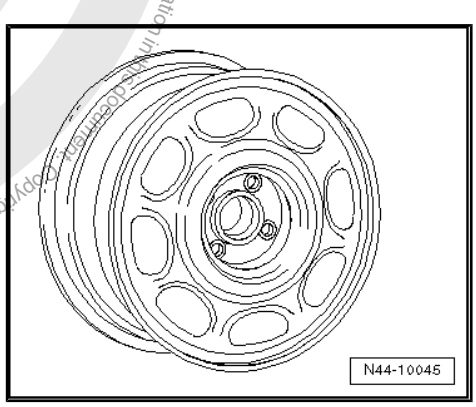

6N0 601 027 D - Wheel and tyre combination ⇒ page 80

Size:	5 1/2 J x 13
Wheel offset in mm:	43
Wheel load in kg:	415

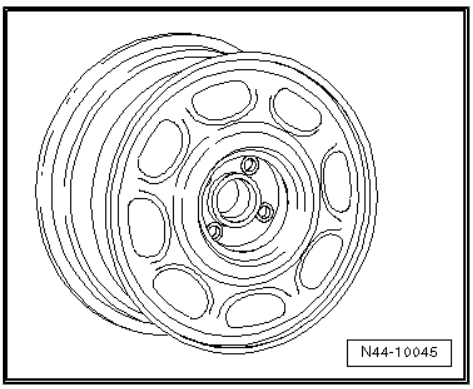

Protected by copyright. Copying for private or commercial purposes, in part or in whole, is not permitted unless authorised by Volkswagen AG. Volkswagen AG does not guarantee or accept any liability with respect to the correctness of information. Inserted content © copyright by Volkswagen AG.
satelettronica

6N0 601 025 C - Wheel and tyre combination ⇒ page 80

Size:	$5^1/_2$ J x 13
Wheel offset in mm:	43
Wheel load in kg:	425

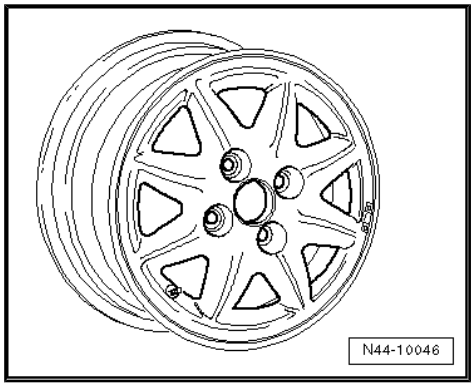

15.2.3 6 J x 14

Caution

Observe the allocation of wheels and tyres to the respective engines, which are listed in the overview table ⇒ page 80 *.*

For all vehicles with power steering

6X0 601 025 - Wheel and tyre combination ⇒ page 81

Size:	6 J x 14
Wheel offset in mm:	43
Wheel load in kg:	415

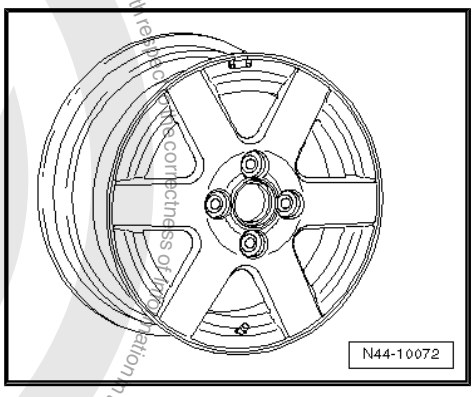

6N0 601 025 D - Wheel and tyre combination ⇒ page 81

Size:	6 J x 14
Wheel offset in mm:	43
Wheel load in kg:	425

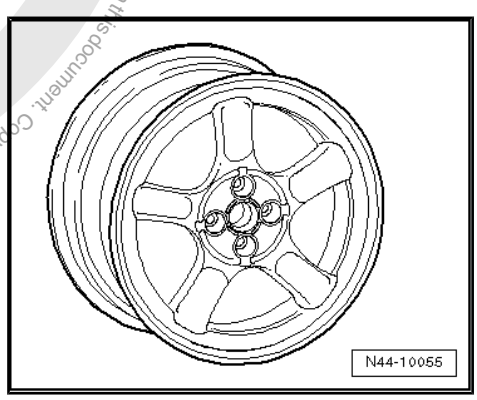

Protected by copyright. Copyright for public or commercial purposes, in part or in whole, is not permitted unless authorised by Volkswagen AG. Volkswagen AG does not guarantee or accept any liability with respect to the correctness of information in this document. Copyright by Volkswagen AG.
satelettronica

1H0 601 027 A - Wheel and tyre combination ⇒ page 81

Size:	6 J x 14
Wheel offset in mm:	43
Wheel load in kg:	500

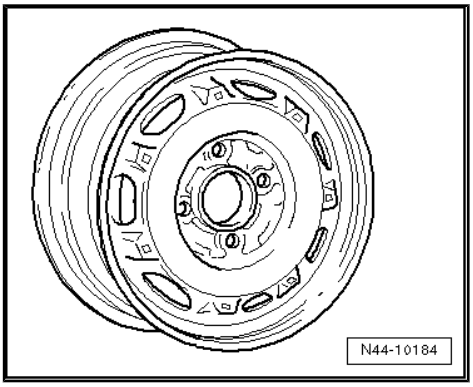

6X0 601 025 A - Wheel and tyre combination ⇒ page 81

Size:	6 J x 14
Wheel offset in mm:	43
Wheel load in kg:	425

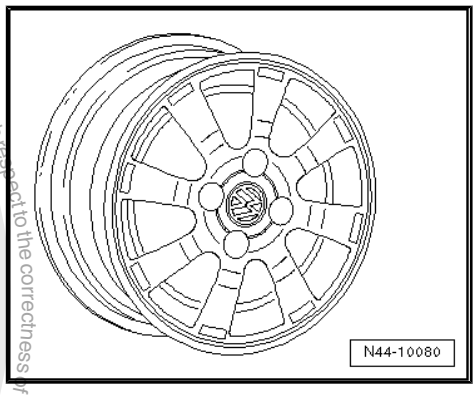

6X0 601 025 D - Wheel and tyre combination ⇒ page 81

Size:	6 J x 14
Wheel offset in mm:	43
Wheel load in kg:	475

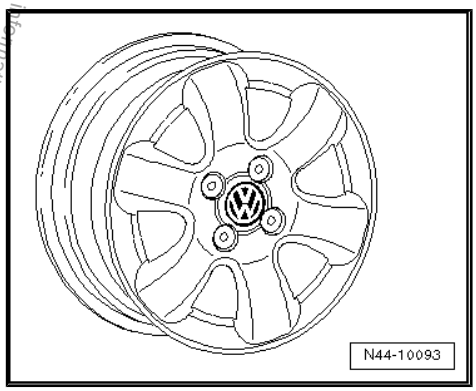

6X0 601 027 A - Wheel and tyre combination ⇒ page 81

Size:	6 J x 14
Wheel offset in mm:	43
Wheel load in kg:	475

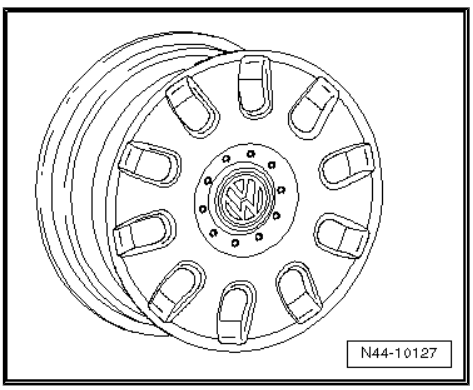

Protected by copyright. Copying for private or commercial purposes, in part or in whole, is not permitted unless authorised by Volkswagen AG. Volkswagen AG does not guarantee or accept any liability with respect to the correctness of information in this document. Copyright by Volkswagen AG.
satelettronica

6X0 601 025 F - Wheel and tyre combination ⇒ page 81

Size:	6 J x 14
Wheel offset in mm:	43
Wheel load in kg:	420

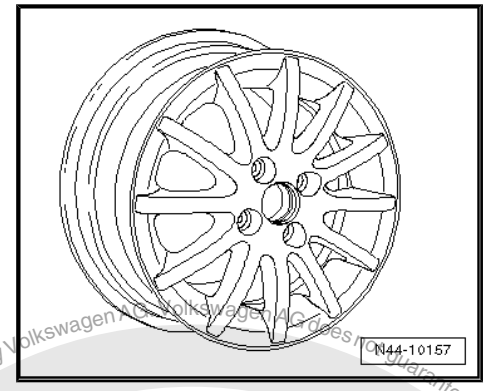

6X0 601 025 G - Wheel and tyre combination ⇒ page 81

Size:	6 J x 14
Wheel offset in mm:	43
Wheel load in kg:	475

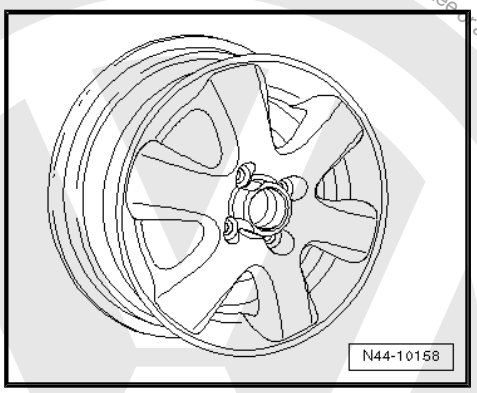

15.2.4 6 J x 15

Caution

Observe the allocation of wheels and tyres to the respective engines, which are listed in the overview table *⇒ page 80* *.*

For all vehicles with power steering

1H0 601 025 AD - Wheel and tyre combination ⇒ page 81

Size:	6 J x 15
Wheel offset in mm:	45
Wheel load in kg:	460

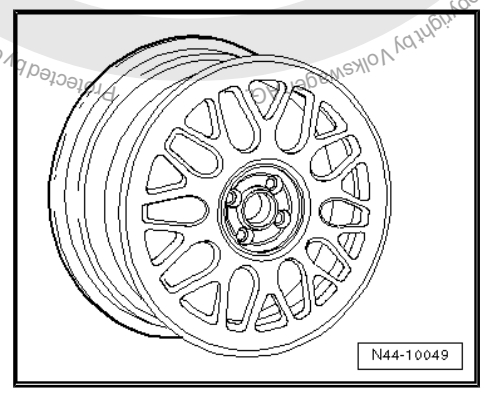

Protected by copyright. Copying for private or commercial purposes, in part or in whole, is not permitted unless authorised by Volkswagen AG. Volkswagen AG does not guarantee or accept any liability with respect to the correctness of information in this document. Copyright by Volkswagen AG.
satelettronica

6N0 601 025 H - Wheel and tyre combination ⇒ page 81

Size:	6 J x 15
Wheel offset in mm:	45
Wheel load in kg:	420

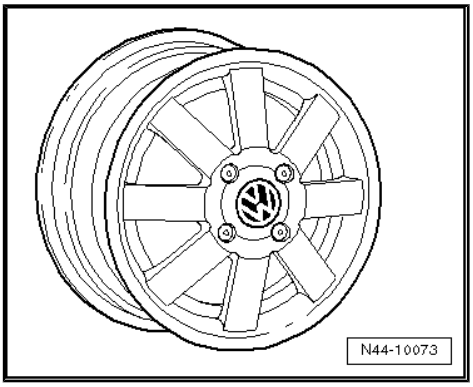

6X0 601 025 C - Wheel and tyre combination ⇒ page 81

Size:	6 J x 15
Wheel offset in mm:	43
Wheel load in kg:	475

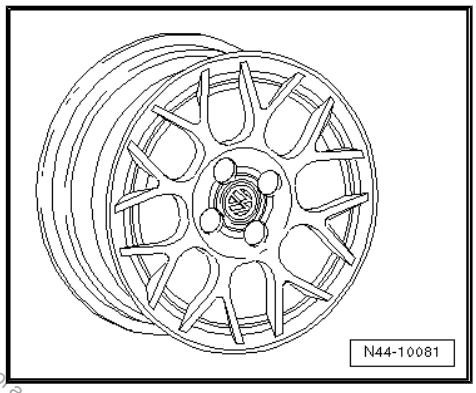

6N0 601 025 J - Wheel and tyre combination ⇒ page 81

Size:	6 J x 15
Wheel offset in mm:	45
Wheel load in kg:	425

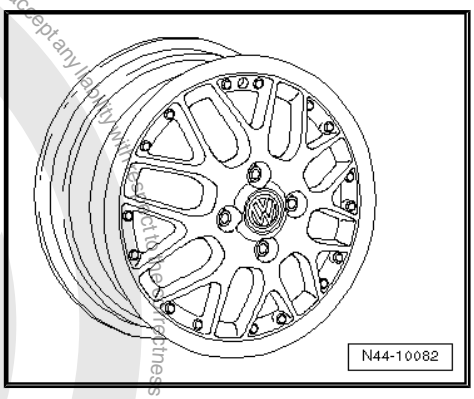

6X0 601 025 E - Wheel and tyre combination ⇒ page 81

Size:	6 J x 15
Wheel offset in mm:	43
Wheel load in kg:	475

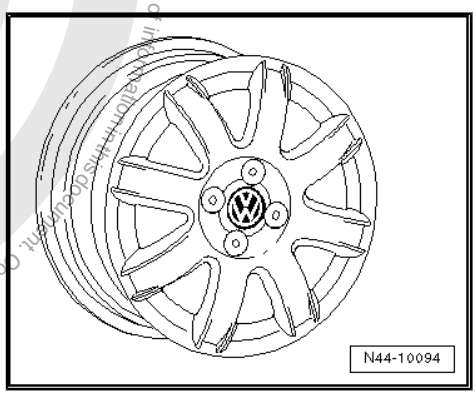

Protected by copyright. Copying for private or commercial purposes, in part or in whole, is not permitted unless authorised by Volkswagen AG. Volkswagen AG does not guarantee or accept any liability with respect to the correctness of information in this document. Copyright by Volkswagen AG.
satelettronica

16 Fox from model year 2005

General

Volkswagen vehicles are built according to the latest findings in safety engineering. To keep it that way, we recommend the use of only genuine Volkswagen spare parts. You can recognise this by the VW Audi logo and by the part number. It has been established that these parts are reliable, safe and suitable.

Despite constant appraisal of the market, we cannot assess other products on these points, even when in isolated cases they have been passed by official inspectors or have been granted official approval. Therefore, we cannot, of course, assume any liability if these products are installed.

WARNING

The products from Volkswagen genuine parts and Volkswagen genuine accessories may differ in fitting requirements, torque specifications and so on.

Always follow the respective fitting and operating instructions.

The wheel and tyre combinations or changes listed in the vehicle tables refer exclusively to Volkswagen Genuine wheels. Approval of wheel and tyre combinations or a change to wheels from the accessories trade is not possible with the parts certificate attached here.

WARNING

The fitting instructions and torque specifications for wheels from Volkswagen genuine accessories may differ from those intended for wheels from Volkswagen genuine parts.

Therefore, always observe the torque settings for the wheel bolts as well as the respective fitting and operating instructions.

16.1 Fox, type 5Z model year 2005 to model year 2012

Appendix for certificate statement 8107901084

The parts certificate can be found on the Volkswagen ServiceNet under Accessories/Tyres, Wheels and Tyres, Wheels and Tyres Guide.

Type approval number: e1*2001/116*0301*00 to e1*2001/116*0301*11

Overview

Model engine output	Tyres	Tyre size	Wheel rim	Off-set in mm	Snow chains	Remarks
1.2l 40 kW; 1.2l 44 kW petrol engine without power assisted steering	Standard tyres	165/70 R 14 81T	5 J x 14 ⇒ page 90	35	Yes	General information on: ◆ Winter tyres ⇒ page 15 ◆ Snow chains ⇒ page 18
	Modification	No changes are permissible apart from the standard wheel and tyre combinations!				

satelettronica

Model engine output	Tyres	Tyre size	Wheel rim	Off-set in mm	Snow chains	Remarks
	Winter tyres	165/70 R 14 81Q	5 J x 14 ⇒ page 90	35	Yes	Tyre makes recommended by Volkswagen: ◆ Summer tyres ⇒ page 637 ◆ Winter tyres ⇒ page 677
1.2l 40 kW; 1.2l 44 kW petrol engine with power assisted steering 1.4l 55 kW petrol engine	Standard tyres	165/70 R 14 81T	5 J x 14 ⇒ page 90	35	Yes	
	Modification	185/60 R 14 82T/H	6 J x 14 ⇒ page 90	43	Yes	
		195/55 R 15 85V	6 J x 15 ⇒ page 92	43	No	
	Winter tyres	165/70 R 14 81Q	5 J x 14 ⇒ page 90	35	Yes	
1.4l 51 kW diesel engine	Standard tyres	185/60 R 14 82T	6 J x 14 ⇒ page 90	43	Yes	
	Modification	165/70 R 14 81T	5 J x 14 ⇒ page 90	35	Yes	
		185/60 R 14 82H	6 J x 14 ⇒ page 90	43	Yes	
		195/55 R 15 85V	6 J x 15 ⇒ page 92	43	No	
	Winter tyres	165/70 R 14 81Q	5 J x 14 ⇒ page 90	35	Yes	
		185/60 R 14 82Q	6 J x 14 ⇒ page 90	43	Yes	

Tyre pressure information is located on the tyre pressure plate on the inside of the tank flap or on the driver side B-pillar.

16.2 Wheel allocation for Fox, type 5Z model year 2005 to model year 2012

Explanation of information on wheels ⇒ page 59

Specified torques for wheel bolts ⇒ Running gear, axles, steering; Rep. gr. 44 ; Fitting wheels and tyres; Fitting wheels

Pitch circle diameter:	100 mm
Number of wheel bolt holes:	5

Protected by copyright. Copying for private or commercial purposes, in part or in whole, is not permitted unless authorised by Volkswagen AG. Volkswagen AG does not guarantee or accept any liability with respect to the correctness of information in this document. Copyright by Volkswagen AG.

satelettronica

16.2.1 5 J x 14

Caution

Observe the allocation of wheels and tyres to the respective engines, which are listed in the overview table ⇒ page 88 .

6Q0 601 027 H, 6Q0 601 027 R - Wheel and tyre combination ⇒ page 88

Size:	5 J x 14
Wheel offset in mm:	35
Wheel load in kg:	455

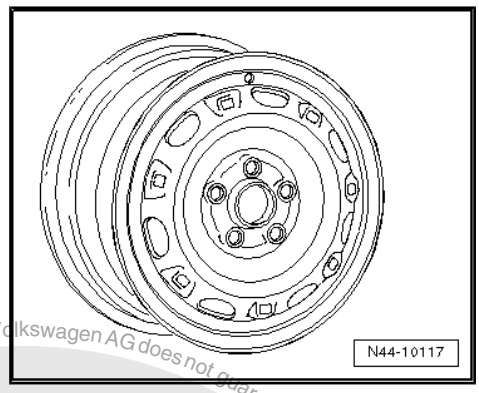

16.2.2 6 J x 14

Caution

Observe the allocation of wheels and tyres to the respective engines, which are listed in the overview table ⇒ page 88 .

For 1.2l 40 kW with power assisted steering, 1.4l 55 kW, 1.4 51 kW diesel

6Q0 601 027 F, 6Q0 601 027 P - Wheel and tyre combination ⇒ page 89

Size:	6 J x 14
Wheel offset in mm:	43
Wheel load in kg:	465

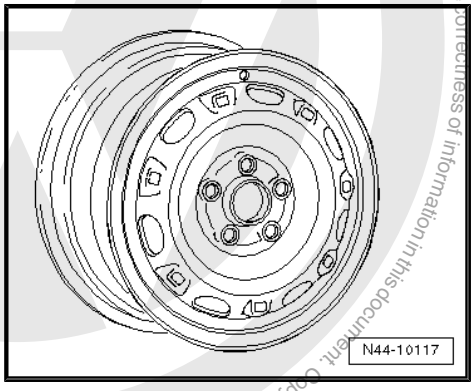

5Z0 601 025 - Wheel and tyre combination ⇒ page 89

Size:	6 J x 14
Wheel offset in mm:	43
Wheel load in kg:	460

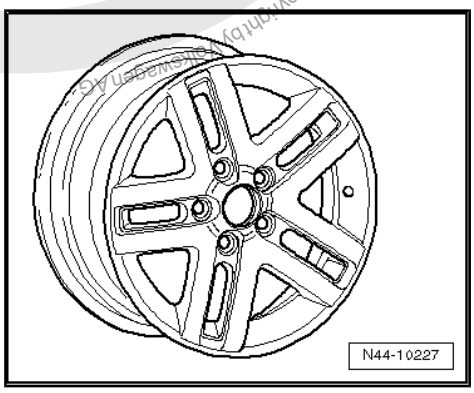

Protected by copyright. Copying for private or commercial purposes, in part or whole, is not permitted unless authorised by Volkswagen AG. Volkswagen AG does not guarantee or accept any liability with respect to the correctness of information in this document. Copyright by Volkswagen AG.
satelettronica

5Z0 601 025 C - Wheel and tyre combination ⇒ page 89

Size:	6 J x 14
Wheel offset in mm:	43
Wheel load in kg:	460

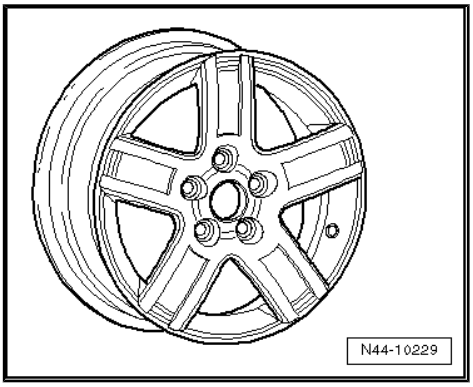

5Z0 601 025 E - Wheel and tyre combination ⇒ page 89

Size:	6 J x 14
Wheel offset in mm:	43
Wheel load in kg:	460

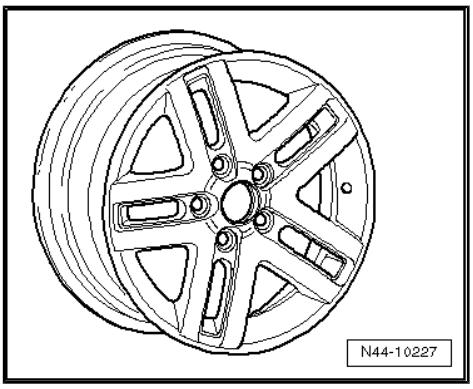

5Z0 601 025 K - Wheel and tyre combination ⇒ page 89

Size:	6 J x 14
Wheel offset in mm:	43
Wheel load in kg:	460

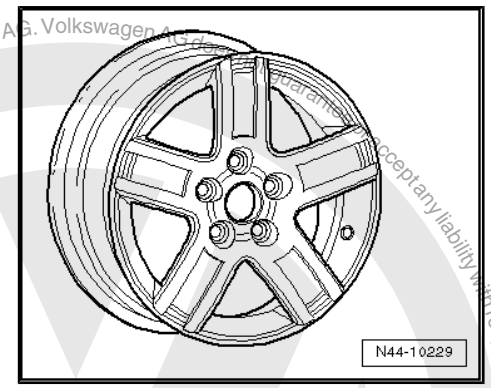

6Q0 601 025 Q - Wheel and tyre combination ⇒ page 89

Size:	6 J x 14
Wheel offset in mm:	43
Wheel load in kg:	465

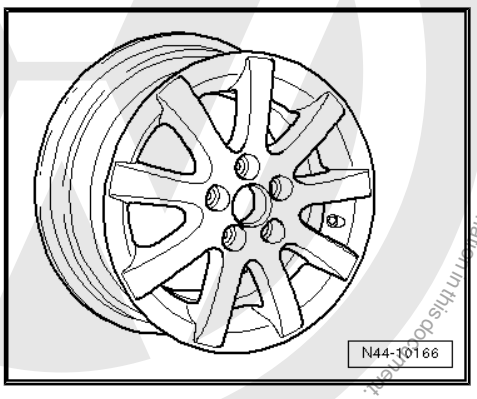

Protected by copyright. Copying for private or commercial purposes, in part or in whole, is not permitted unless authorised by Volkswagen AG. Volkswagen AG does not guarantee or accept any liability with respect to the correctness of information in this document. Copyright by Volkswagen AG.
satelettronica

6Q0 601 025 K - Wheel and tyre combination ⇒ page 89

Size:	6 J x 14
Wheel offset in mm:	43
Wheel load in kg:	465

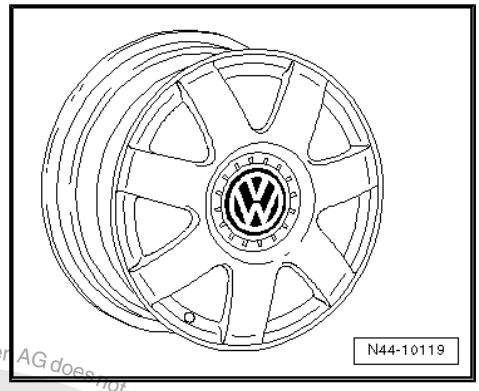

16.2.3 6 J x 15

Caution

Observe the allocation of wheels and tyres to the respective engines, which are listed in the overview table *⇒ page 88* *.*

For 1.2l 40 kW with power assisted steering, 1.4l 55 kW, 1.4 51 kW diesel

6Q0 601 027 G, 6Q0 601 027 Q - Wheel and tyre combination ⇒ page 89

Size:	6 J x 15
Wheel offset in mm:	43
Wheel load in kg:	500

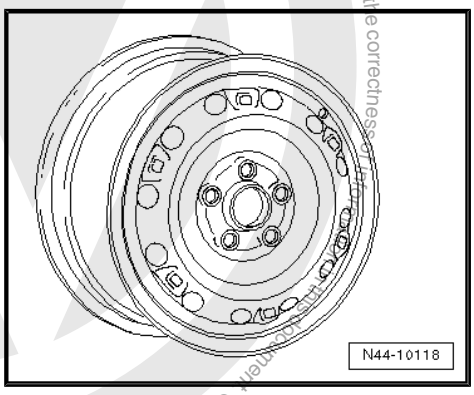

5Z0 601 025 A - Wheel and tyre combination ⇒ page 89

Size:	6 J x 15
Wheel offset in mm:	43
Wheel load in kg:	475

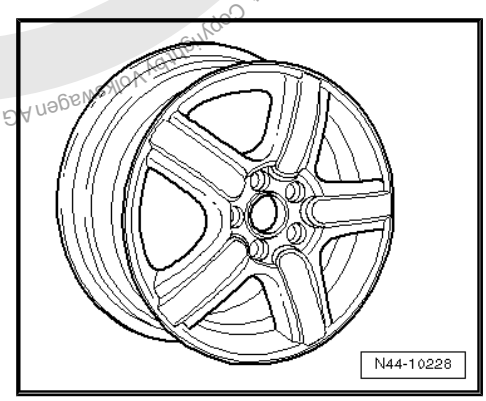

Protected by copyright. Copying for private or commercial purposes, in part or in whole, is not permitted unless authorised by Volkswagen AG. Volkswagen AG does not guarantee or accept any liability with respect to the correctness of information. Copyright by Volkswagen AG.
satelettronica

5Z0 601 025 D - Wheel and tyre combination ⇒ page 89

Size:	6 J x 15
Wheel offset in mm:	43
Wheel load in kg:	475

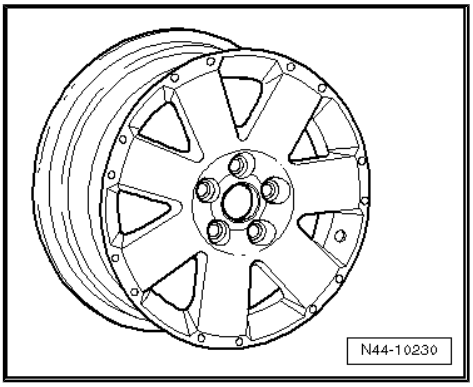

6Q0 601 025 L - Wheel and tyre combination ⇒ page 89

Size:	6 J x 15
Wheel offset in mm:	43
Wheel load in kg:	475

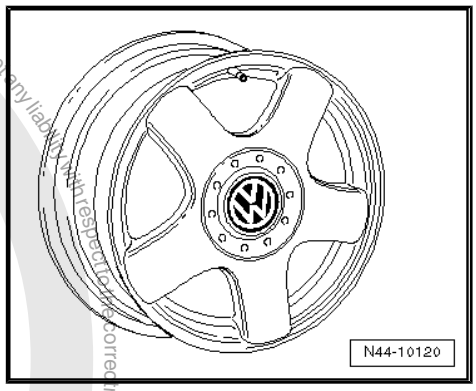

5Z0 601 025 F- Wheel and tyre combination ⇒ page 89

Size:	6 J x 15
Wheel offset in mm:	43
Wheel load in kg:	480

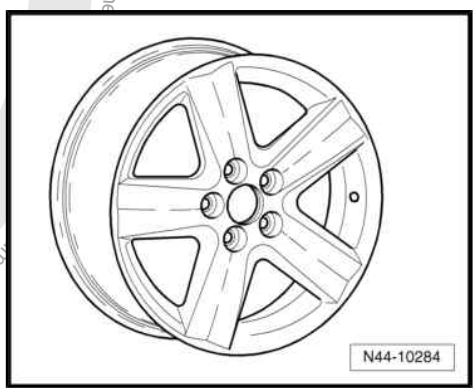

5Z0 601 025 J - Wheel and tyre combination ⇒ page 89

Size:	6 J x 15
Wheel offset in mm:	43
Wheel load in kg:	480

Protected by copyright. Copying for private or commercial purposes, in part or in whole, is not permitted unless authorised by Volkswagen AG. Volkswagen AG does not guarantee or accept any liability with respect to correctness of information. Copyright by Volkswagen AG.
satelettronica

5Z0 601 025 M, 5Z0 601 025 P - Wheel and tyre combination
⇒ page 89

Size:	6 J x 15
Wheel offset in mm:	43
Wheel load in kg:	480

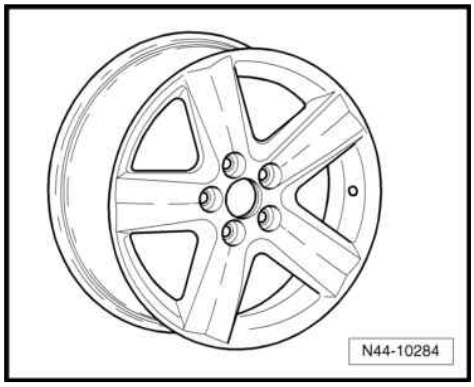

6QE 601 025 B - Wheel and tyre combination ⇒ page 89

Size:	6 J x 15
Wheel offset in mm:	43
Wheel load in kg:	480

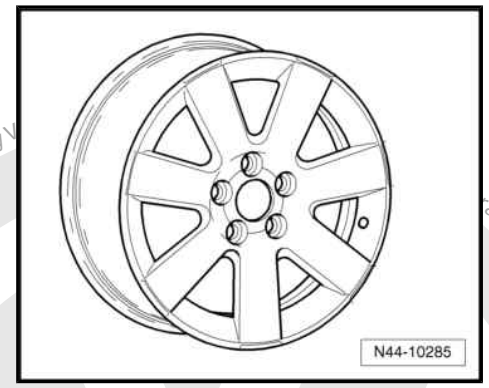

Protected by copyright. Copying for private or commercial purposes, in part or in whole, is not permitted unless authorised by Volkswagen AG. Copyright by Volkswagen AG. We accept any liability with respect to the correctness of information in this document.
satelitonica

17 Polo model year 1995 to model year 2001

General

Volkswagen vehicles are built according to the latest findings in safety engineering. To keep it that way, we recommend the use of only genuine Volkswagen spare parts. You can recognise this by the VW Audi logo and by the part number. It has been established that these parts are reliable, safe and suitable.

Despite constant appraisal of the market, we cannot assess other products on these points, even when in isolated cases they have been passed by official inspectors or have been granted official approval. Therefore, we cannot, of course, assume any liability if these products are installed.

> ⚠ **WARNING**
>
> *The products from Volkswagen genuine parts and Votex genuine accessories may differ in fitting requirements, torque specifications and so on.*
>
> *Always follow the respective fitting and operating instructions.*

The wheel and tyre combinations or changes listed in the vehicle tables refer exclusively to Volkswagen Genuine wheels. Approval of wheel and tyre combinations or a change to wheels from the accessories trade is not possible with the parts certificate attached here.

> ⚠ **WARNING**
>
> *The fitting instructions and torque specifications for wheels from Votex genuine accessories may differ from those intended for wheels from Volkswagen genuine parts.*
>
> *Therefore, always observe the torque settings for the wheel bolts as well as the respective fitting and operating instructions.*

17.1 Polo, type 6N up to and including 07.95

Appendix 2 to Parts Certificate 1461/02

General type approval No. G 774

Overview

Model engine output	Tyres	Tyre size	Wheel rim	Off-set in mm	Snow chains	Remarks
33, 37, 40, 44 kW with manual gearbox without air conditioning	Standard tyres	155/70 R 13 75S/T	$4^1/_2$ J x 13 ⇒ page 96	35	Yes	If the speed rating “S” does not already appear in the vehicle documentation, it must be entered.
		175/65 R 13 80S/T	$5^1/_2$ J x 13 ⇒ page 97	43	Yes	

Protected by copyright. Copying for private or commercial purposes, in part or in whole, is not permitted unless authorised by Volkswagen AG. Volkswagen AG does not guarantee or accept any liability with respect to the correctness of information in this document. Copyright by Volkswagen AG.
satelettronica

Model engine output	Tyres	Tyre size	Wheel rim	Off-set in mm	Snow chains	Remarks
	Modification	No changes are permissible apart from the standard wheel and tyre combinations!				General information on: ◆ Winter tyres ⇒ page 15 ◆ Snow chains ⇒ page 18
	Winter tyres	155/70 R 13 75Q	$4^1/_2$ J x 13 ⇒ page 96	35	Yes	Tyre makes recommended by Volkswagen: ◆ Summer tyres ⇒ page 637 ◆ All-season tyres ⇒ page 667 ◆ Winter tyres ⇒ page 677
40, 44 kW with air conditioning and/ or automatic gearbox,	Standard tyres	175/65 R 13 80S/T	$5^1/_2$ J x 13 ⇒ page 97	43	Yes	
55 kW petrol engine, 47 kW diesel engine	Modification	No changes are permissible apart from the standard wheel and tyre combinations!				
	Winter tyres	175/65 R 13 80Q	$5^1/_2$ J x 13 ⇒ page 97	43	Yes	

Tyre pressures can be found on the inside of the fuel tank flap or in ⇒ Maintenance ; Booklet 28

17.2 Wheel allocation for Polo, type 6N up to and including 07.95

Explanation of information on wheels ⇒ page 59

Specified torques for wheel bolts ⇒ Running gear, axles, steering; Rep. gr. 40 ; Repairing front wheel suspension; II - Assembly overview - wheel bearing, suspension

Pitch circle diameter:	100 mm
Number of wheel bolt holes:	4

17.2.1 $4^1/_2$ J x 13

Caution

Observe the allocation of wheels and tyres to the respective engines, which are listed in the overview table ⇒ page 95 .

Copyright by Volkswagen AG. Volkswagen AG does not guarantee or accept any liability with respect to the correctness of information in this document. Copyright by Volkswagen AG. Protected by copyright. Copying for private or commercial purposes, in whole or in part, is not permitted unless authorised by Volkswagen AG.
satelettronica

For 33, 37, 40, 44 kW vehicles with manual gearbox, without air conditioning

6N0 601 025 E - Wheel and tyre combination ⇒ page 95

Size:	$4^1/_2$ J x 13
Wheel offset in mm:	35
Wheel load in kg:	390

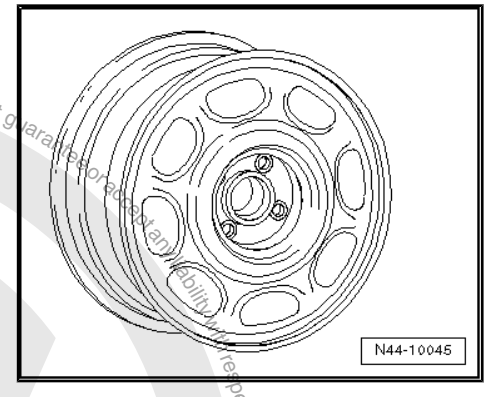

6N0 601 027 C - Wheel and tyre combination ⇒ page 95

Size:	$4^1/_2$ J x 13
Wheel offset in mm:	35
Wheel load in kg:	425

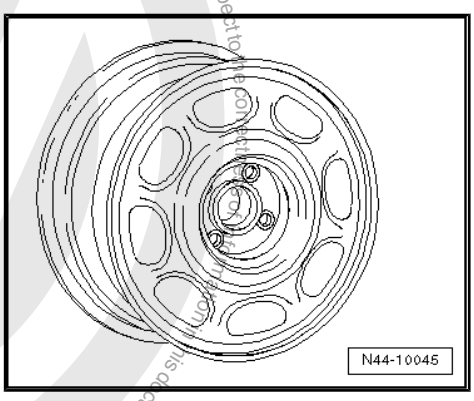

17.2.2 $5^1/_2$ J x 13

Caution

Observe the allocation of wheels and tyres to the respective engines, which are listed in the overview table ⇒ page 95 *.*

For vehicles up to and including 55 kW petrol engines with and without PAS

6N0 601 025 A - allocation ⇒ page 95

Size:	$5^1/_2$ J x 13
Wheel offset in mm:	43
Wheel load in kg:	415

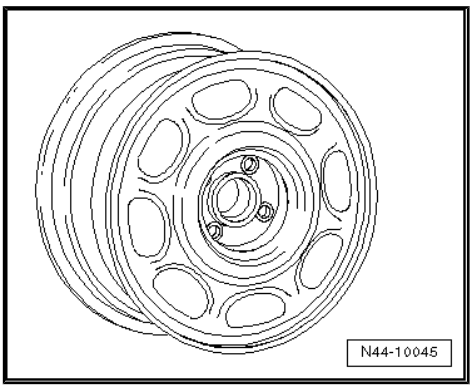

Protected by copyright. Copyright by Volkswagen AG. Copyright by Volkswagen AG. Volkswagen AG does not guarantee or accept any liability with respect to the correctness and completeness of this document. Copying for private or commercial purposes, in part or in whole, is not permitted unless authorised by Volkswagen AG.
satelettronica

6N0 601.027 D - Allocation ⇒ page 95

Size:	$5^1/_2$ J x 13
Wheel offset in mm:	43
Wheel load in kg:	425

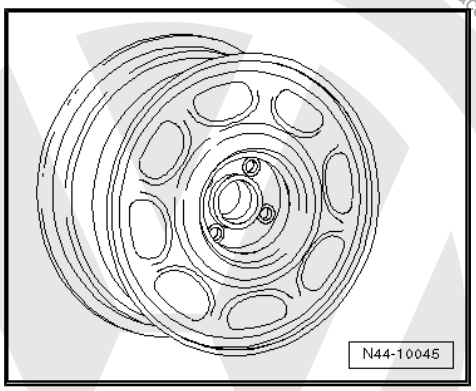

17.3 Polo, type 6N from 08.95 up to and including model year 1996

Appendix 2 to Parts Certificate 1461/02

General type approval No. G 774

Overview

Model engine output	Tyres	Tyre size	Wheel rim	Off-set in mm	Snow chains	Remarks
33, 37, 40, 44 kW with manual gear-box without air con-ditioning	Standard tyres	155/70 R 13 75S/T	$4^1/_2$ J x 13 ⇒ page 101	35	Yes	
		175/65 R 13 80S/T	$5^1/_2$ J x 13 ⇒ page 101	43	Yes	
	Modifica-tion	185/55 R 14 78S	6 J x 14 ⇒ page 102	43	No	Tyres 185/55 R 14 or 195/45 R 15 are permitted only on vehicles with PAS
		195/45 R 15 78S	6 J x 15 ⇒ page 103	45	No	General informa-tion on: ◆ Winter tyres ⇒ page 15 ◆ Snow chains ⇒ page 18
	Winter tyres	155/70 R 13 75Q	$4^1/_2$ J x 13 ⇒ page 101	35	Yes	Tyre makes recom-mended by Volks-wagen: ◆ Summer tyres ⇒ page 637 ◆ All-season tyres ⇒ page 667 ◆ Winter tyres ⇒ page 677
40, 44 kW with air conditioning and/or automatic gearbox,	Standard tyres	175/65 R 13 80S/T	$5^1/_2$ J x 13 ⇒ page 101	43	Yes	
55 kW petrol en-gine; 47 kW diesel en-gine	Modifica-tion	185/55 R 14 78S	6 J x 14 ⇒ page 102	43	No	
		195/45 R 15 78S	6 J x 15 ⇒ page 103	45	No	
	Winter tyres	175/65 R 13 80Q	$5^1/_2$ J x 13 ⇒ page 101	43	Yes	

Protected by copyright. Copyright by Volkswagen AG.
Copyright by Volkswagen AG. Volkswagen AG does not guarantee or accept any liability with respect to the correctness of information in this document. Copyright by Volkswagen AG. Reproduction, in part or in whole, is not permitted unless authorised for commercial purposes, in part or in whole, is not permitted unless authorised
satelettronica

Model engine output	Tyres	Tyre size	Wheel rim	Off-set in mm	Snow chains	Remarks
74 kW 16V	Standard tyres	185/55 R 14 78H	6 J x 14 ⇒ page 102	43	Yes	
	Modification	195/45 R 15 78H	6 J x 15 ⇒ page 103	43/45	No	
	Winter tyres	185/55 R 14 78T	6 J x 14 ⇒ page 102	43	Yes	

Tyre pressures can be found on the inside of the fuel tank flap or in ⇒ Maintenance ; Booklet 28

17.4 Polo, type 6N from model year 1997 to model year 1999

Appendix 2 to Parts Certificate 1461/02

Type Approval No.: e1*96/79*0069*00 to e1*96/79*0069*05

Type Approval No.: e1*98/14*0069*06

Overview

Model engine output	Tyres	Tyre size	Wheel rim	Off-set in mm	Snow chains	Remarks
33, 37, 40, 44 kW with manual gearbox without air conditioning Up to and including model year 1998	Standard tyres	155/70 R 13 75S	$4^1/_2$ J x 13 ⇒ page 101	35	Yes	The 155/70 R 13 75S tyres are no longer permitted on vehicles with 44 kW from model year 1999!
		175/65 R 13 80S	$5^1/_2$ J x 13 ⇒ page 101	43	Yes	Tyres 185/55 R 14 or 195/45 R 15 are permitted only on vehicles with PAS
	Modification	185/55 R 14 79S* ⇒ page 99	6 J x 14 ⇒ page 102	43	No	* Tyres with LI 78 are permitted on vehicles up to and including model year 1998!
		195/45 R 15 78S	6 J x 15 ⇒ page 103	43/45	No	General information on: ◆ Winter tyres ⇒ page 15 ◆ Snow chains ⇒ page 18
	Winter tyres	155/70 R 13 75Q	$4^1/_2$ J x 13 ⇒ page 101	35	Yes	Tyre makes recommended by Volkswagen:

Protected by copyright. Copying for private or commercial purposes, in part or in whole is not permitted unless authorised by Volkswagen AG. Volkswagen AG does not guarantee or accept any liability with respect to the correctness of information.
satelettronica

Model engine output	Tyres	Tyre size	Wheel rim	Off-set in mm	Snow chains	Remarks
40, 44 kW with air conditioning and/or automatic gearbox,	Standard tyres	175/65 R 13 80S	$5^1/_2$ J x 13 ⇒ page 101	43	Yes	◆ Summer tyres ⇒ page 637 ◆ All-season tyres ⇒ page 667 ◆ Winter tyres ⇒ page 677
40, 44 kW from model year 1999; 55 kW petrol engine; 42, 44, 47 kW diesel engine	Modification	185/55 R 14 79S* ⇒ page 99	6 J x 14 ⇒ page 102	43	No	
		195/45 R 15 78S	6 J x 15 ⇒ page 103	43/45	No	
	Winter tyres	175/65 R 13 80Q	$5^1/_2$ J x 13 ⇒ page 101	43	Yes	
74 kW 16V	Standard tyres	185/55 R 14 78H	6 J x 14 ⇒ page 102	43	Yes	
	Modification	195/45 R 15 78H	6 J x 15 ⇒ page 103	43/45	No	
	Winter tyres	185/55 R 14 78T	6 J x 14 ⇒ page 102	43	Yes	
88 kW 16V	Standard tyres	185/55 R 14 79H	6 J x 14 ⇒ page 102	43	Yes	
	Modification	195/45 R 15 78H	6 J x 15 ⇒ page 103	43/45	No	
	Winter tyres	185/55 R 14 79T	6 J x 14 ⇒ page 102	43	Yes	

Tyre pressures can be found on the inside of the fuel tank flap or in ⇒ Maintenance ; Booklet 28

17.5 Wheel allocation for Polo, type 6N from 08.95 to model year 1999

Explanation of information on wheels ⇒ page 59

Specified torques for wheel bolts ⇒ Running gear, axles, steering; Rep. gr. 40 ; Repairing front wheel suspension; II - Assembly overview - wheel bearing, suspension

Pitch circle diameter:	100 mm
Number of wheel bolt holes:	4

Protected by copyright. Copyright by Volkswagen AG. Volkswagen AG does not guarantee or accept any liability with respect to the correctness of information in this document. Copying for private or commercial purposes, in part or in whole, is not permitted unless authorised by Volkswagen AG.
satelettronica

17.5.1 4 1/2 J x 13

Caution

Observe wheel and tyre allocation for the respective engines, which are listed in the overview tables ⇒ page 98 (from 08.95 up to and including model year 1996) and ⇒ page 99 (from model year 1997 to 1999).

For 33, 37, 40, 44 kW vehicles with manual gearbox, without air conditioning

6N0 601 025 E - allocation ⇒ page 98 (08.95 - 1996) or ⇒ page 99 (1997 - 1999)

Size:	4 1/2 J x 13
Wheel offset in mm:	35
Wheel load in kg:	390

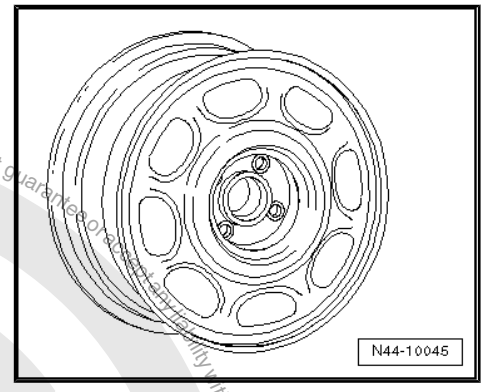

6N0 601 027 C - allocation ⇒ page 98 (08.95 - 1996) or ⇒ page 99 (1997 - 1999)

Size:	4 1/2 J x 13
Wheel offset in mm:	35
Wheel load in kg:	425

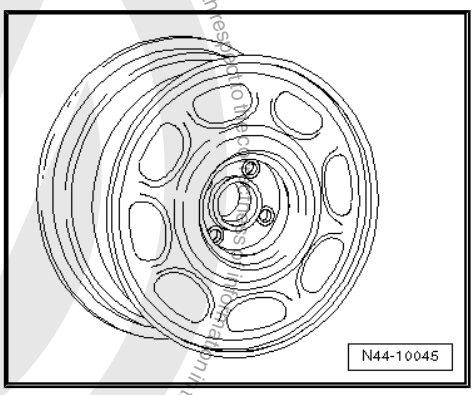

17.5.2 5 1/2 J x 13

Caution

Observe wheel and tyre allocation for the respective engines, which are listed in the overview tables ⇒ page 98 (from 08.95 up to and including model year 1996) and ⇒ page 99 (from model year 1997 to 1999).

Copyright by Volkswagen AG. Volkswagen AG does not guarantee or assume any liability with respect to the correctness of information in this document. Copyright by Volkswagen AG. Copying for private or commercial purposes, in part or in whole, is not permitted unless authorised by Volkswagen AG.
satelettronica

For vehicles up to and including 55 kW petrol engines with and without PAS

6N0 601 025 A - allocation ⇒ page 98 (08.95 - 1996) or ⇒ page 99 (1997 - 1999)

Size:	$5^1/_2$ J x 13
Wheel offset in mm:	43
Wheel load in kg:	415

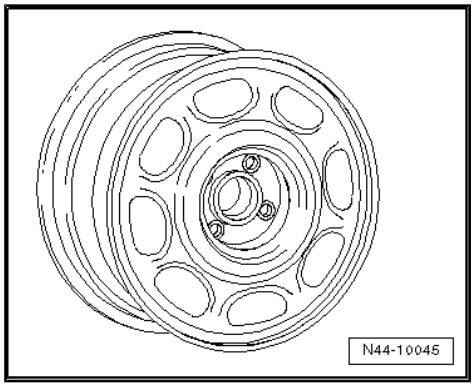

6N0 601 027 D - allocation ⇒ page 98 (08.95 - 1996) or ⇒ page 99 (1997 - 1999)

Size:	$5^1/_2$ J x 13
Wheel offset in mm:	43
Wheel load in kg:	425

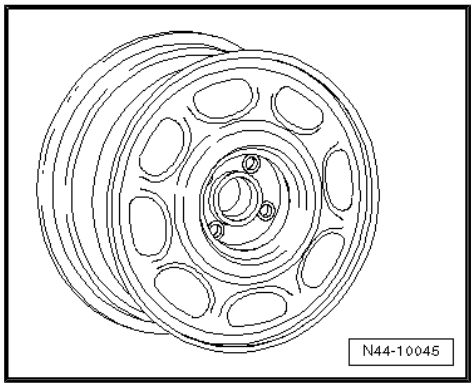

17.5.3 6 J x 14

Caution

Observe wheel and tyre allocation for the respective engines, which are listed in the overview tables ⇒ page 98 (from 08.95 up to and including model year 1996) and ⇒ page 99 (from model year 1997 to 1999).

For all vehicles with power steering

6N0 601 025 D - allocation ⇒ page 98 (08.95 - 1996) or ⇒ page 99 (1997 - 1999)

Size:	6 J x 14
Wheel offset in mm:	43
Wheel load in kg:	415

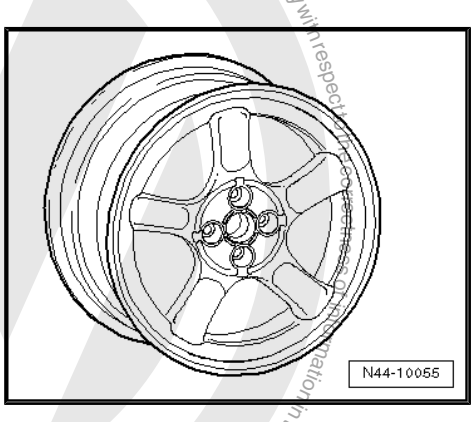

Protected by copyright. Copying for private or commercial purposes, in part or in whole, is not permitted unless authorised by Volkswagen AG. Volkswagen AG does not guarantee or accept any liability with respect to the correctness of information in this document. Copyright by Volkswagen AG.
satelettronica

1H0 601 027 A - allocation ⇒ page 98 (08.95 - 1996) or ⇒ page 99 (1997 - 1999)

Size:	6 J x 14
Wheel offset in mm:	43
Wheel load in kg:	500

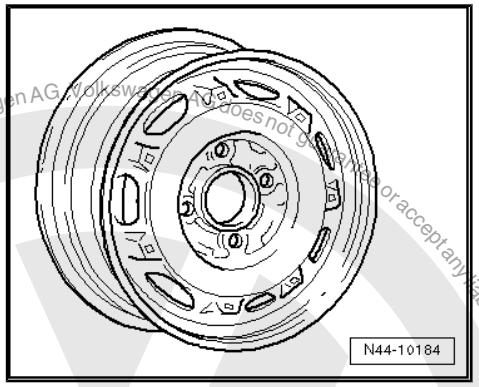

6X0 601 025 - allocation ⇒ page 98 (08.95 - 1996) or ⇒ page 99 (1997 - 1999)

Size:	6 J x 14
Wheel offset in mm:	43
Wheel load in kg:	415

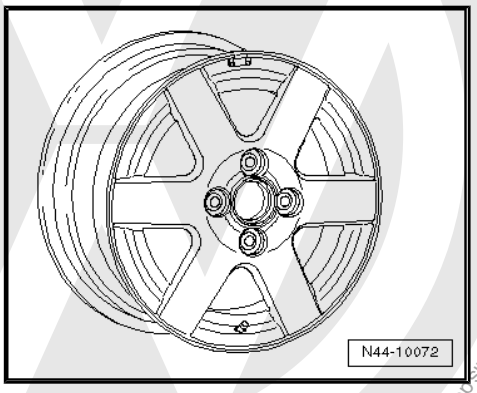

6X0 601 025 A - allocation ⇒ page 98 (08.95 - 1996) or ⇒ page 99 (1997 - 1999)

Size:	6 J x 14
Wheel offset in mm:	43
Wheel load in kg:	425

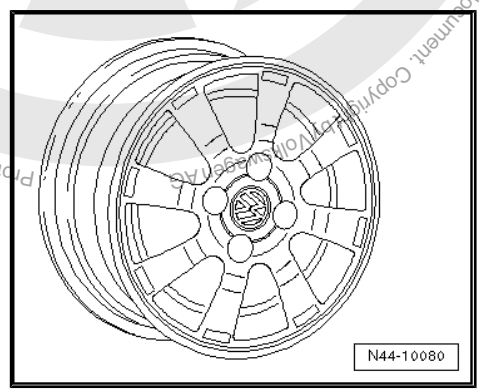

17.5.4 6 J x 15

Caution

Observe wheel and tyre allocation for the respective engines, which are listed in the overview tables ⇒ page 98 (from 08.95 up to and including model year 1996) and ⇒ page 99 (from model year 1997 to 1999).

Protected by copyright. Copying for private or commercial purposes, in part or in whole, is not permitted unless authorised by Volkswagen AG. Volkswagen AG does not guarantee or accept any liability with respect to the correctness of information in this document. Copyright by Volkswagen AG.
satelettronica

For all vehicles with power steering

1H0 601 025 AE - allocation ⇒ page 98 (08.95 - 1996) or ⇒ page 99 (1997 - 1999)

Size:	6 J x 15
Wheel offset in mm:	45
Wheel load in kg:	480

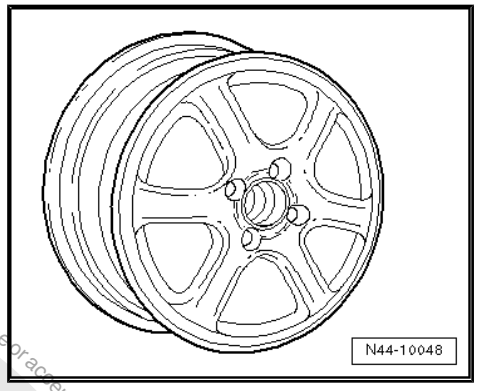

6N0 601 025 H - allocation ⇒ page 98 (08.95 - 1996) or ⇒ page 99 (1997 - 1999)

Size:	6 J x 15
Wheel offset in mm:	45
Wheel load in kg:	420

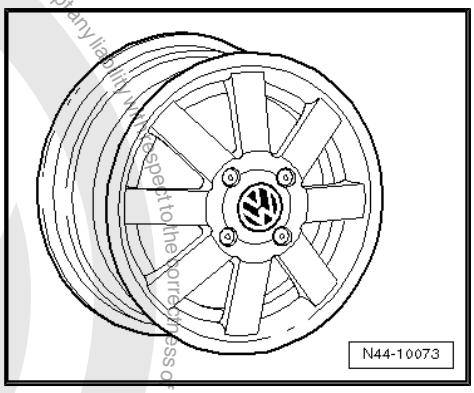

6N0 601 025 J - allocation ⇒ page 98 (08.95 - 1996) or ⇒ page 99 (1997 - 1999)

Size:	6 J x 15
Wheel offset in mm:	45
Wheel load in kg:	425

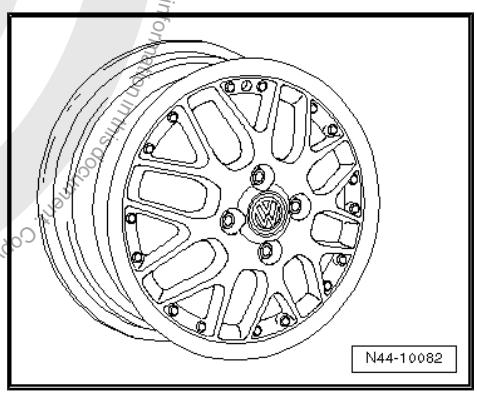

1H0 601 025 AD - allocation ⇒ page 98 (08.95 - 1996) or ⇒ page 99 (1997 - 1999)

Size:	6 J x 15
Wheel offset in mm:	45
Wheel load in kg:	460

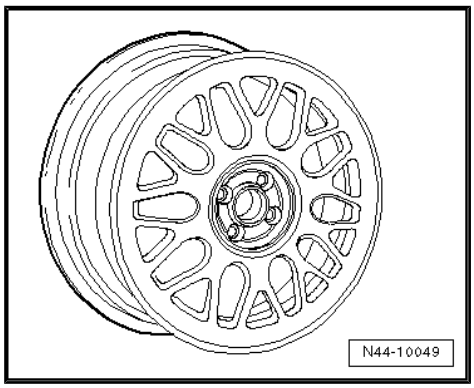

Protected by copyright. Copying for private or commercial purposes, in part or in whole, is not permitted unless authorised by Volkswagen AG. Volkswagen AG does not guarantee or accept any liability with respect to the correctness of information in this document. Copyright by Volkswagen AG.

satelettronica

6X0 601 025 C - allocation ⇒ page 99 (08.95 - 1996) or ⇒ page 99 (1997 - 1999)

Size:	6 J x 15
Wheel offset in mm:	43
Wheel load in kg:	475

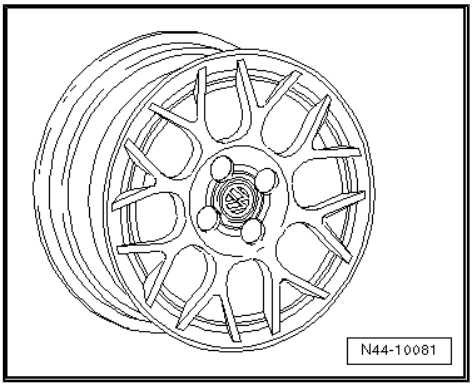

17.6 Polo, type 6N from model year 2000 to model year 2001

Appendix 2 to Parts Certificate 1461/02

Type Approval No. e1*98/14*0069*07 to e1*98/14*0069*11

Overview

Model engine output	Tyres	Tyre size	Wheel rim	Off-set in mm	Snow chains	Remarks
37 kW without air conditioning	Standard tyres	155/70 R 13 75S	$4^1/_2$ J x 13 ⇒ page 107	35	Yes	
	Modification	175/65 R 13 80S	$5^1/_2$ J x 13 ⇒ page 107	43	Yes	
		185/55 R 14 80H* ⇒ page 105	6 J x 14 ⇒ page 108	43	No	Tyres 185/55 R 14 or 195/45 R 15 are permitted only on vehicles with PAS
		195/45 R 15 78H	6 J x 15 ⇒ page 109	43/45	No	
	Winter tyres	155/70 R 13 75Q	$4^1/_2$ J x 13 ⇒ page 107	35	Yes	
37 kW with air conditioning; 40, 44 kW petrol engine;	Standard tyres	175/65 R 13 80S	$5^1/_2$ J x 13 ⇒ page 107	43	Yes	* Tyres with LI 79 are permitted on vehicles from model year 2001!
42, 44, 47 kW diesel;	Modification	185/55 R 14 80H* ⇒ page 105	6 J x 14 ⇒ page 108	43	No	
55 kW petrol engine with 13" brakes, brake disc diameter 239 mm with automatic gearbox		195/45 R 15 78H	6 J x 15 ⇒ page 109	43/45	No	General information on: ◆ Winter tyres ⇒ page 15 ◆ Snow chains ⇒ page 18

Protected by copyright. Copying for private or commercial purposes, in part or in whole, is not permitted unless authorised by Volkswagen AG. Volkswagen AG does not guarantee or accept any liability with respect to the correctness of information in this document. Copyright by Volkswagen AG.
satelettronica

Model engine output	Tyres	Tyre size	Wheel rim	Off-set in mm	Snow chains	Remarks
	Winter tyres	175/65 R 13 80Q	$5^1/_2$ J x 13 ⇒ page 107	43	Yes	Tyre makes recommended by Volkswagen: ◆ Summer tyres ⇒ page 637 ◆ All-season tyres ⇒ page 667 ◆ Winter tyres ⇒ page 677
55 kW petrol engine with 13" brakes, brake disc diameter 239 mm with manual gearbox	Standard tyres	175/65 R 13 80T	$5^1/_2$ J x 13 ⇒ page 107	43	Yes	
	Modification	185/55 R 14 80H* ⇒ page 105	6 J x 14 ⇒ page 108	43	No	
		195/45 R 15 78H	6 J x 15 ⇒ page 109	43/45	No	
	Winter tyres	175/65 R 13 80Q	$5^1/_2$ J x 13 ⇒ page 107	43	Yes	
55 kW petrol engine with 14" brakes, brake disc diameter 256 mm; 55 kW TDI; 74 kW 16V	Standard tyres	185/55 R 14 80H* ⇒ page 105	6 J x 14 ⇒ page 108	43	Yes	
	Modification	195/45 R 15 78H	6 J x 15 ⇒ page 109	43/45	No	
	Winter tyres	185/55 R 14 80T* ⇒ page 105	6 J x 14 ⇒ page 108	43	Yes	
92 kW 16V	Standard tyres	185/55 R 14 80V* ⇒ page 105	6 J x 14 ⇒ page 108	43	Yes	
	Modification	195/45 R 15 78V	6 J x 15 ⇒ page 109	43/45	No	
	Winter tyres	185/55 R 14 80T* ⇒ page 105	6 J x 14 ⇒ page 108	43	Yes	

Tyre pressures can be found on the inside of the fuel tank flap or in ⇒ Maintenance ; Booklet 28

17.7 Wheel allocation for Polo, type 6N from model year 2000 to model year 2001

Explanation of information on wheels ⇒ page 59

Specified torques for wheel bolts ⇒ Running gear, axles, steering; Rep. gr. 40 ; Repairing front wheel suspension; II - Assembly overview - wheel bearing, suspension

Pitch circle diameter: 100 mm

Protected by copyright. Copying for private or commercial purposes, in part or in whole, is not permitted unless authorised by Volkswagen AG. Volkswagen AG does not guarantee or accept any liability with respect to the correctness of information in this document. Copyright by Volkswagen AG.

satelettronica

Number of wheel bolt holes: 4

17.7.1 4 1/2 J x 13

Caution

Observe the allocation of wheels and tyres to the respective engines, which are listed in the overview table ⇒ page 105 *.*

For 33, 37, 40, 44 kW vehicles with manual gearbox, without air conditioning

6N0 601 025 E - allocation ⇒ page 105

Size:	4 1/2 J x 13
Wheel offset in mm:	35
Wheel load in kg:	390

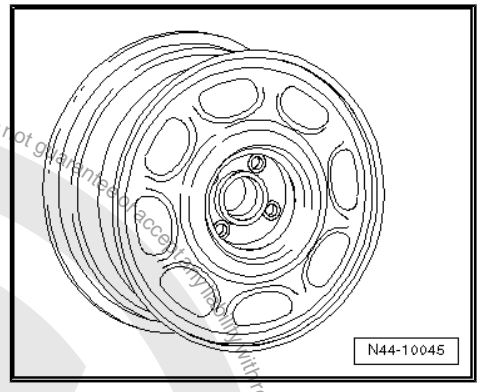

6N0 601 027 C - allocation ⇒ page 105

Size:	4 1/2 J x 13
Wheel offset in mm:	35
Wheel load in kg:	425

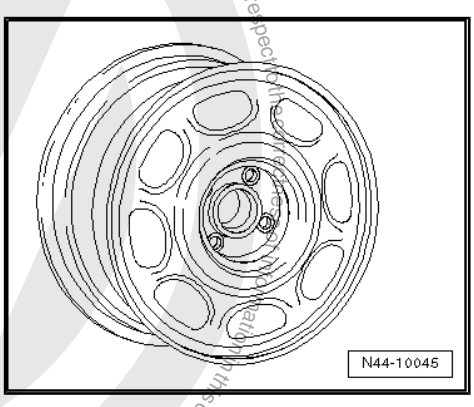

17.7.2 5 1/2 J x 13

Caution

Observe the allocation of wheels and tyres to the respective engines, which are listed in the overview table ⇒ page 105 *.*

Copyright by Volkswagen AG. Volkswagen AG does not guarantee or accept any liability with respect to the correctness and completeness of this document. Copyrighted by copyright. Copying for private or commercial purposes, in part or in whole, is not permitted unless authorised by Volkswagen AG.
satelettronica

Protected by copyright. Copying for private or commercial purposes, in part or in whole, is not permitted unless authorised by Volkswagen AG. Volkswagen AG does not guarantee or accept any liability with respect to the correctness of information in this document. Copyright by Volkswagen AG.

For vehicles up to and including 55 kW petrol engine without ABS with 13" brakes with and without PAS

6N0 601 025 A - allocation ⇒ page 105

Size:	$5^1/_2$ J x 13
Wheel offset in mm:	43
Wheel load in kg:	415

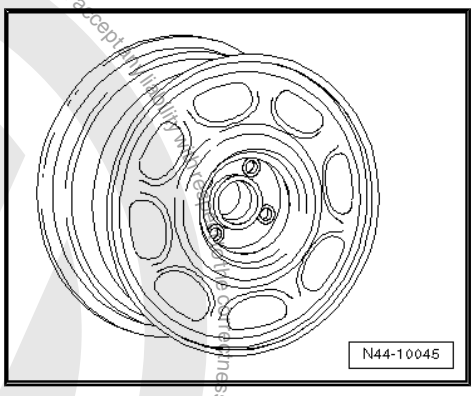

6N0 601.027 D - Allocation ⇒ page 105

Size:	$5^1/_2$ J x 13
Wheel offset in mm:	43
Wheel load in kg:	425

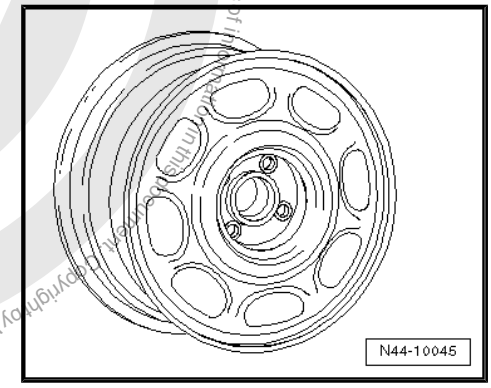

17.7.3 6 J x 14

Caution

Observe the allocation of wheels and tyres to the respective engines, which are listed in the overview table ⇒ page 105 *.*

For vehicles with maximum permitted axle load of 830 kg

6X0 601 025 - allocation ⇒ page 105

Size:	6 J x 14
Wheel offset in mm:	43
Wheel load in kg:	415

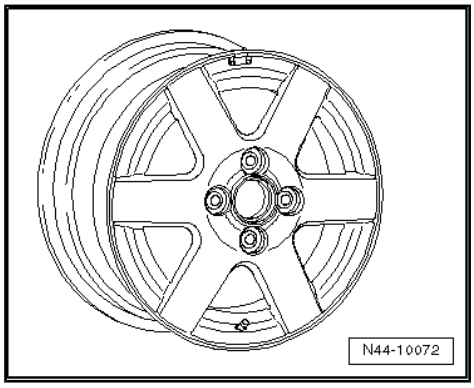

satelettronica

6N0 601.025 D - Allocation ⇒ page 105

Size:	6 J x 14
Wheel offset in mm:	43
Wheel load in kg:	415

For vehicles with maximum permitted axle load of 850 kg

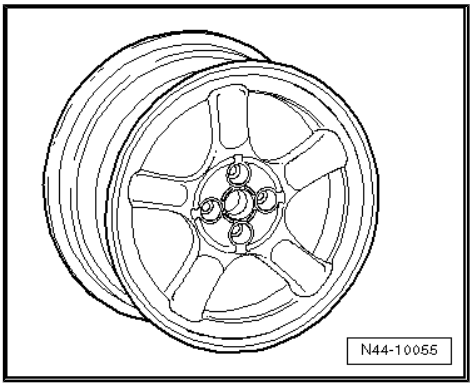

6X0 601 025 A - allocation ⇒ page 105

Size:	6 J x 14
Wheel offset in mm:	43
Wheel load in kg:	425

For all vehicles with power steering

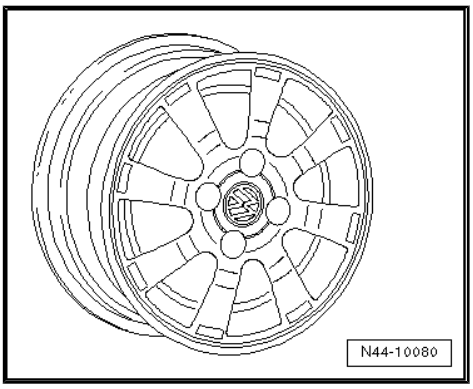

6X0 601 025 D - allocation ⇒ page 105

Size:	6 J x 14
Wheel offset in mm:	43
Wheel load in kg:	475

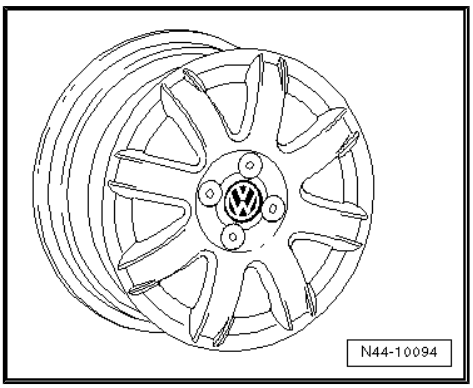

1H0 601 027 A - allocation ⇒ page 105

Size:	6 J x 14
Wheel offset in mm:	43
Wheel load in kg:	500

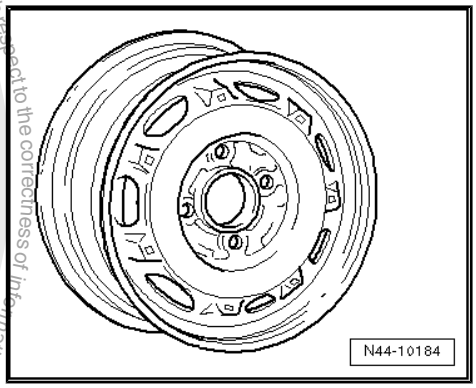

17.7.4 6 J x 15

Caution

Observe the allocation of wheels and tyres to the respective engines, which are listed in the overview table *⇒ page 105* *.*

satelettronica

For vehicles with maximum permitted axle load of 840 kg

6N0 601 025 H - allocation ⇒ page 105

Size:	6 J x 15
Wheel offset in mm:	45
Wheel load in kg:	420

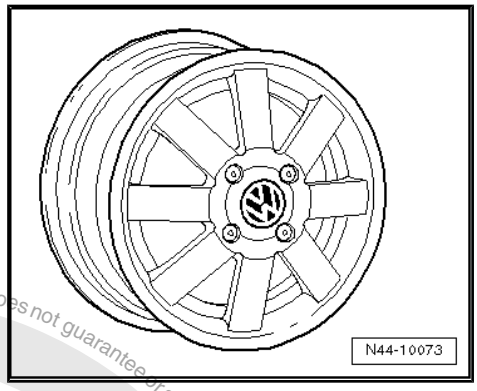

For vehicles with maximum permitted axle load of 850 kg

6N0 601 025 J - allocation ⇒ page 105

Size:	6 J x 15
Wheel offset in mm:	45
Wheel load in kg:	425

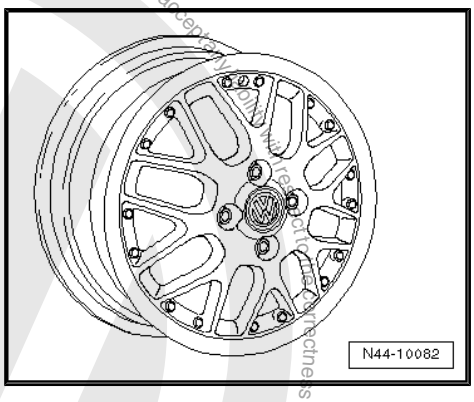

For all vehicles with power steering

1H0 601 025 AD - allocation ⇒ page 105

Size:	6 J x 15
Wheel offset in mm:	45
Wheel load in kg:	460

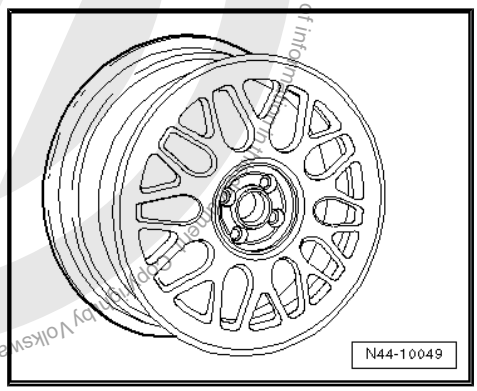

1H0 601 025 AE - allocation ⇒ page 105

Size:	6 J x 15
Wheel offset in mm:	45
Wheel load in kg:	480

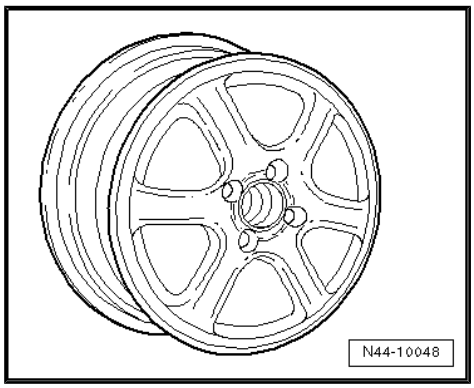

Protected by copyright. Copying for private or commercial purposes, in part or in whole, is not permitted unless authorised by Volkswagen AG. Volkswagen AG does not guarantee or accept any liability with respect to the correctness of information in this document. Copyright by Volkswagen AG.
satelettronica

6X0 601 025 C - allocation ⇒ page 105

Size:	6 J x 15
Wheel offset in mm:	43
Wheel load in kg:	475

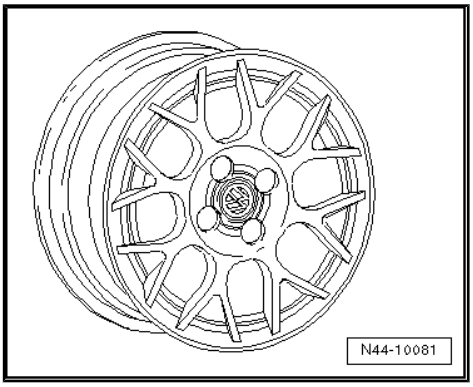

6X0 601 025 E - allocation ⇒ page 105

Size:	6 J x 15
Wheel offset in mm:	43
Wheel load in kg:	475

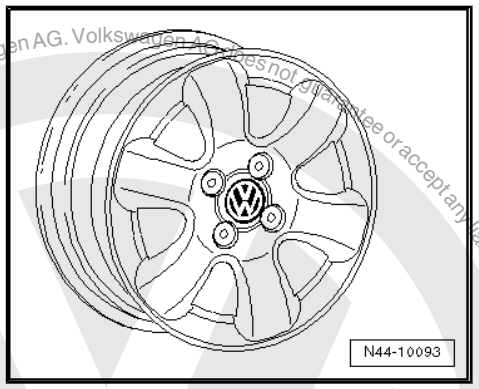

Protected by copyright. Copying for private or commercial purposes, in part or in whole, is not permitted unless authorised by Volkswagen AG. Volkswagen AG does not guarantee or accept any liability with respect to the correctness of information in this document. Copyright by Volkswagen AG.
satelettronica

18 Polo Classic model year 1996 to model year 2002

General

Volkswagen vehicles are built according to the latest findings in safety engineering. To keep it that way, we recommend the use of only genuine Volkswagen spare parts. You can recognise this by the VW Audi logo and by the part number. It has been established that these parts are reliable, safe and suitable.

Despite constant appraisal of the market, we cannot assess other products on these points, even when in isolated cases they have been passed by official inspectors or have been granted official approval. Therefore, we cannot, of course, assume any liability if these products are installed.

> ⚠ **WARNING**
>
> *The products from Volkswagen genuine parts and Votex genuine accessories may differ in fitting requirements, torque specifications and so on.*
>
> *Always follow the respective fitting and operating instructions.*

The wheel and tyre combinations or changes listed in the vehicle tables refer exclusively to Volkswagen Genuine wheels. Approval of wheel and tyre combinations or a change to wheels from the accessories trade is not possible with the parts certificate attached here.

> ⚠ **WARNING**
>
> *The fitting instructions and torque specifications for wheels from Votex genuine accessories may differ from those intended for wheels from Volkswagen genuine parts.*
>
> *Therefore, always observe the torque settings for the wheel bolts as well as the respective fitting and operating instructions.*

18.1 Polo Classic, type 6KV model year 1996 to model year 2002

Appendix 2 to Parts Certificate 1461/02

Type Approval No.: e9*93/81*0008*00 to e9*93/81*0008*08

Type Approval No.: e9*98/14*0008*09 to e9*98/14*0008*16

Overview

Model engine output	Tyres	Tyre size	Wheel rim	Offset in mm	Snow chains	Remarks
Up to 44 kW petrol engine	Standard tyres	185/60 R 14 82H	6 J x 14 ⇒ page 115	38	No	
	Modification	175/70 R 13 82S	$5^1/_2$ J x 13 ⇒ page 114	38	No	
		185/60 R 14 82S	6 J x 14 ⇒ page 115	38	No	

Protected by copyright. Copying for private or commercial purposes, in part or in whole, is not permitted unless authorised by Volkswagen AG. Volkswagen AG does not guarantee or accept any liability with respect to the correctness of information in this document. Copyright by Volkswagen AG.
satelettronica

Model engine output	Tyres	Tyre size	Wheel rim	Off-set in mm	Snow chains	Remarks
		185/55 R 15 81S	6 J x 15 ⇒ page 116	38	No	
	Winter tyres	175/70 R 13 82Q	5 1/2 J x 13 ⇒ page 114	38	Yes	General information on: ◆ Winter tyres ⇒ page 15 ◆ Snow chains ⇒ page 18
55 kW petrol engine, up to 55 kW diesel engine	Standard tyres	185/60 R 14 82/83T	6 J x 14 ⇒ page 115	38	No	The winter tyres 175/65 R 14 82Q are not always entered in the vehicle documentation.
	Modification	185/60 R 14 82S	6 J x 14 ⇒ page 115	38	Yes* ⇒ page 113	If necessary, they must be subsequently entered.
		185/55 R 15 82S	6 J x 15 ⇒ page 116	38	Yes* ⇒ page 113	
	Winter tyres	175/65 R 14 82Q	6 J x 14 ⇒ page 115	38	Yes	
		185/60 R 14 82Q* ⇒ page 113	6 J x 14 ⇒ page 115	38	Yes	Tyre makes recommended by Volkswagen: ◆ Summer tyres ⇒ page 638 ◆ Winter tyres ⇒ page 679
66 kW TDI	Standard tyres	185/60 R 14 82/83H	6 J x 14 ⇒ page 115	38	Yes* ⇒ page 113	
	Modification	185/60 R 14 82T	6 J x 14 ⇒ page 115	38	Yes* ⇒ page 113	
		185/55 R 15 81T	6 J x 15 ⇒ page 116	38	Yes* ⇒ page 113	
	Winter tyres	175/65 R 14 82Q	6 J x 14 ⇒ page 115	38	Yes	* Valid only for vehicles from 09.99. Use only small-link snow chains.
		185/60 R 14 82Q* ⇒ page 113	6 J x 14 ⇒ page 115	38	Yes	
74 kW 81 kW TDI	Standard tyres	185/60 R 14 83H	6 J x 14 ⇒ page 115	38	Yes* ⇒ page 113	
	Modification	185/60 R 14 82H	6 J x 14 ⇒ page 115	38	Yes* ⇒ page 113	
		185/55 R 15 81H	6 J x 15 ⇒ page 116	38	Yes* ⇒ page 113	

Protected by copyright. Copyright by Volkswagen AG. Volkswagen AG does not guarantee or accept any liability with respect to the correctness of information in this document. Copyright by Volkswagen AG. Reproduction, in whole or in part or in any form, for commercial purposes, is not permitted unless authorised by Volkswagen AG.

satelettronica

Model engine output	Tyres	Tyre size	Wheel rim	Off-set in mm	Snow chains	Remarks
	Winter tyres	175/65 R 14 82Q	6 J x 14 ⇒ page 115	38	Yes	
		185/60 R 14 82Q* ⇒ page 113	6 J x 14 ⇒ page 115	38	Yes	

Tyre pressures can be found on the inside of the fuel tank flap or in ⇒ Maintenance ; Booklet 29

18.2 Wheel allocation for Polo Classic, type 6KV model year 1996 to model year 2002

Explanation of information on wheels ⇒ page 59

Specified torques for wheel bolts ⇒ Running gear, axles, steering; Rep. gr. 40 ; Repairing front wheel suspension; II - Repairing wheel bearing

Pitch circle diameter:	100 mm
Number of wheel bolt holes:	4

18.2.1 5$^1/_2$ J x 13

Caution

Observe the allocation of wheels and tyres to the respective engines, which are listed in the overview table ⇒ page 112 .

For 40 kW und 44 kW vehicles

191 601 025 D - Wheel and tyre combination ⇒ page 112

Size:	5$^1/_2$ J x 13
Wheel offset in mm:	38
Wheel load in kg:	410

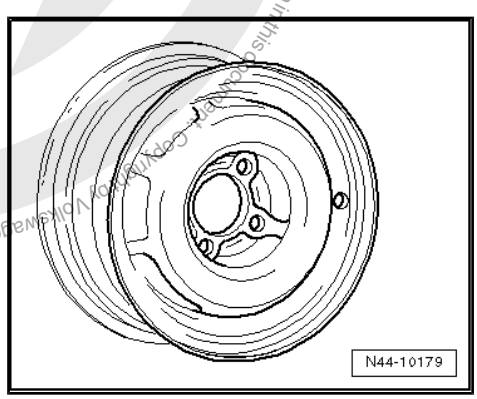

Protected by copyright. Copying for private or commercial purposes, in part or in whole, is not permitted unless authorised by Volkswagen AG. Volkswagen AG does not guarantee or accept any liability with respect to the correctness of information in this document. Copyright by Volkswagen AG.
satelettronica

1H0 601 025 A - Wheel and tyre combination ⇒ page 112

Size:	$5^1/_2$ J x 13
Wheel offset in mm:	38
Wheel load in kg:	450

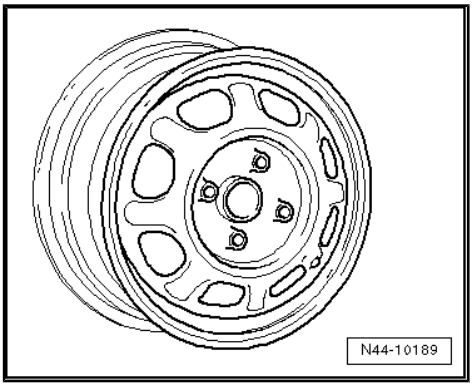

18.2.2 6 J x 14

Caution

Observe the allocation of wheels and tyres to the respective engines, which are listed in the overview table *⇒ page 112* *.*

For 40 kW and 44 kW vehicles - to VIN 6K W 530 000

1L0 601 025 J - Wheel and tyre combination ⇒ page 112

Size:	6 J x 14
Wheel offset in mm:	38
Wheel load in kg:	530

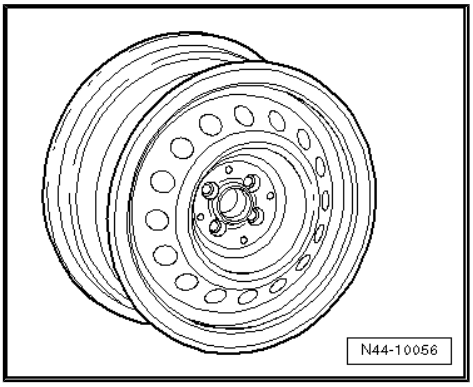

For 40 kW and 44 kW vehicles - from vehicle ID No. 6K W 530 001

6K9 601 027 - Wheel and tyre combination ⇒ page 112

Size:	6 J x 14
Wheel offset in mm:	38
Wheel load in kg:	530

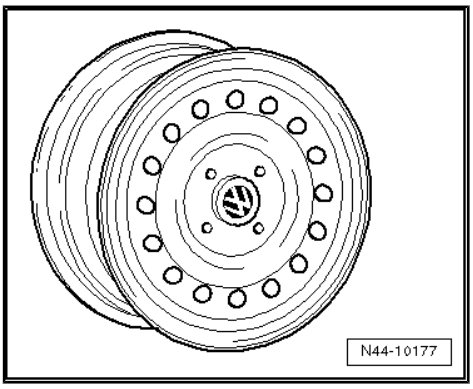

For all vehicles

Protected by copyright. Copying for private or commercial purposes, in part or in whole, is not permitted unless authorised by Volkswagen AG. Volkswagen AG does not guarantee or accept any liability with respect to the correctness of information in this document. Copyright by Volkswagen AG.

satelettronica

321 601 025 H - Wheel and tyre combination ⇒ page 112

Size:	6 J x 14
Wheel offset in mm:	38
Wheel load in kg:	500

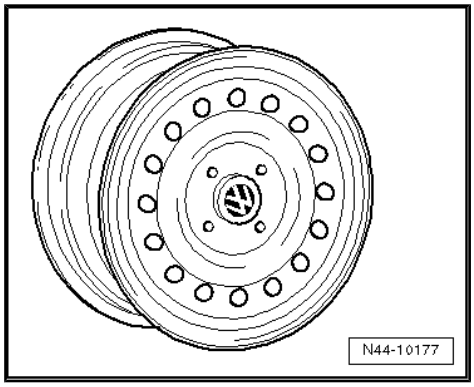

357 601 025 A/Q - Wheel and tyre combination ⇒ page 112

Size:	6 J x 14
Wheel offset in mm:	38
Wheel load in kg:	530

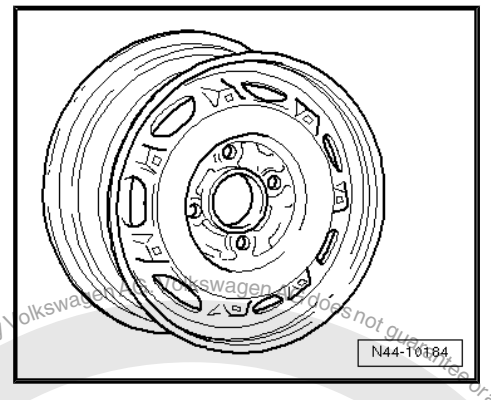

6K0 601 025 M - Wheel and tyre combination ⇒ page 112

Size:	6 J x 14
Wheel offset in mm:	38
Wheel load in kg:	450

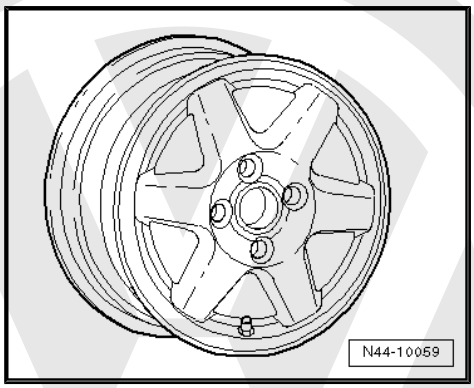

6K0 601 025 S - Wheel and tyre combination ⇒ page 112

Size:	6 J x 14
Wheel offset in mm:	38
Wheel load in kg:	450

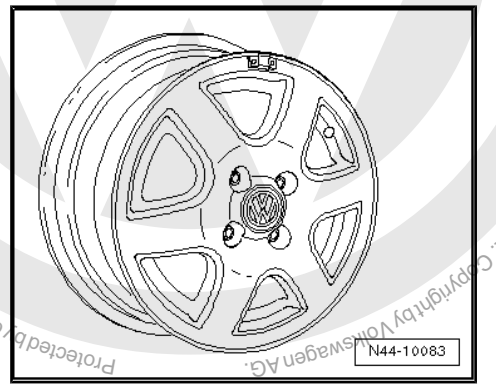

18.2.3 6 J x 15

Caution

Observe the allocation of wheels and tyres to the respective engines, which are listed in the overview table *⇒ page 112* *.*

Protected by copyright. Copyright for private or commercial purposes, in part or in whole, is not permitted unless authorised by Volkswagen AG. Volkswagen AG does not guarantee or accept any liability with respect to the correctness of information in this document. Copyright by Volkswagen AG.
satelettronica

For all vehicles

6K0 601 025 Q - Wheel and tyre combination ⇒ page 113

Size:	6 J x 15
Wheel offset in mm:	38
Wheel load in kg:	450

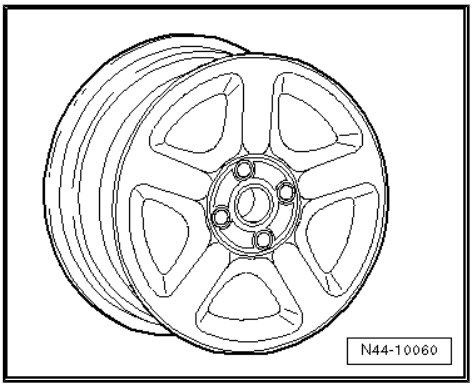

6K0 601 025 AB - Wheel and tyre combination ⇒ page 113

Size:	6 J x 15
Wheel offset in mm:	38
Wheel load in kg:	450

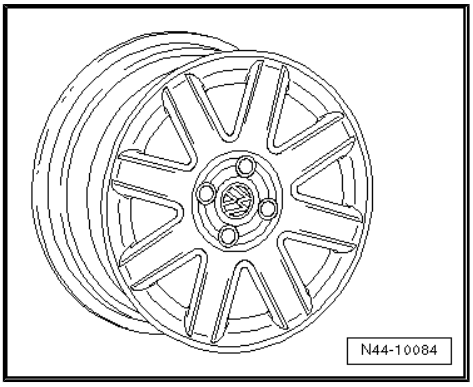

Protected by copyright. Copying for private or commercial purposes, in part or in whole, is not permitted unless authorised by Volkswagen AG. Volkswagen AG does not guarantee or accept any liability with respect to the correctness of information in this document. Copyright by Volkswagen AG.

satelettronica

19 Polo Variant model year 1998 to model year 2002

General

Volkswagen vehicles are built according to the latest findings in safety engineering. To keep it that way, we recommend the use of only genuine Volkswagen spare parts. You can recognise this by the VW Audi logo and by the part number. It has been established that these parts are reliable, safe and suitable.

Despite constant appraisal of the market, we cannot assess other products on these points, even when in isolated cases they have been passed by official inspectors or have been granted official approval. Therefore, we cannot, of course, assume any liability if these products are installed.

> ⚠ **WARNING**
>
> *The products from Volkswagen genuine parts and Votex genuine accessories may differ in fitting requirements, torque specifications and so on.*
>
> *Always follow the respective fitting and operating instructions.*

The wheel and tyre combinations or changes listed in the vehicle tables refer exclusively to Volkswagen Genuine wheels. Approval of wheel and tyre combinations or a change to wheels from the accessories trade is not possible with the parts certificate attached here.

> ⚠ **WARNING**
>
> *The fitting instructions and torque specifications for wheels from Votex genuine accessories may differ from those intended for wheels from Volkswagen genuine parts.*
>
> *Therefore, always observe the torque settings for the wheel bolts as well as the respective fitting and operating instructions.*

19.1 Polo Variant type 6KV model year 1998 to model year 2002

Appendix 2 to Parts Certificate 1461/02

Type Approval No.: e9*93/81*0008*00 to e9*93/81*0008*08

Type Approval No.: e9*98/14*0008*09 to e9*98/14*0008*16

Overview

Model engine output	Tyres	Tyre size	Wheel rim	Offset in mm	Snow chains	Remarks
Up to 44 kW petrol engine	Standard tyres	185/60 R 14 82H	6 J x 14 ⇒ page 121	38	No	
	Modification	175/70 R 13 82S	5 1/2 J x 13 ⇒ page 120	38	No	
		185/60 R 14 82S	6 J x 14 ⇒ page 121	38	No	

Protected by copyright. Copying for private or commercial purposes, in part or in whole, is not permitted unless authorised by Volkswagen AG. Volkswagen AG does not guarantee or accept any liability with respect to the correctness of information in this document. Copyright by Volkswagen AG.
satelettronica

Model engine output	Tyres	Tyre size	Wheel rim	Off-set in mm	Snow chains	Remarks
		185/55 R 15 81S	6 J x 15 ⇒ page 122	38	No	
	Winter tyres	175/70 R 13 82Q	5 1/2 J x 13 ⇒ page 120	38	Yes	General information on: ◆ Winter tyres ⇒ page 15 ◆ Snow chains ⇒ page 18
55 kW petrol engine, up to 55 kW diesel engine	Standard tyres	185/60 R 14 82/83T	6 J x 14 ⇒ page 121	38	No	The winter tyres 175/65 R 14 82Q are not always entered in the vehicle documentation.
	Modification	185/60 R 14 82S	6 J x 14 ⇒ page 121	38	Yes* ⇒ page 119	If necessary, they must be subsequently entered.
		185/55 R 15 82S	6 J x 15 ⇒ page 122	38	Yes* ⇒ page 119	
	Winter tyres	175/65 R 14 82Q	6 J x 14 ⇒ page 121	38	Yes	
		185/60 R 14 82Q* ⇒ page 119	6 J x 14 ⇒ page 121	38	Yes	Tyre makes recommended by Volkswagen: ◆ Summer tyres ⇒ page 639 ◆ Winter tyres ⇒ page 680
66 kW TDI	Standard tyres	185/60 R 14 82/83H	6 J x 14 ⇒ page 121	38	Yes* ⇒ page 119	
	Modification	185/60 R 14 82T	6 J x 14 ⇒ page 121	38	Yes* ⇒ page 119	
		185/55 R 15 81T	6 J x 15 ⇒ page 122	38	Yes* ⇒ page 119	
	Winter tyres	175/65 R 14 82Q	6 J x 14 ⇒ page 121	38	Yes	* Valid only for vehicles from 09.99. Use only small-link snow chains.
		185/60 R 14 82Q* ⇒ page 119	6 J x 14 ⇒ page 121	38	Yes	
74 kW 81 kW TDI	Standard tyres	185/60 R 14 83H	6 J x 14 ⇒ page 121	38	Yes* ⇒ page 119	
	Modification	185/60 R 14 82H	6 J x 14 ⇒ page 121	38	Yes* ⇒ page 119	
		185/55 R 15 81H	6 J x 15 ⇒ page 122	38	Yes* ⇒ page 119	

Protected by copyright. Copying for private or commercial purposes, in part or in whole, is not permitted unless authorised by Volkswagen AG. Volkswagen AG does not guarantee or accept any liability with respect to the correctness of information. Copyright by Volkswagen AG.

satelettronica

Model engine output	Tyres	Tyre size	Wheel rim	Off-set in mm	Snow chains	Remarks
	Winter tyres	175/65 R 14 82Q	6 J x 14 ⇒ page 121	38	Yes	
		185/60 R 14 82Q* ⇒ page 119	6 J x 14 ⇒ page 121	38	Yes	

Tyre pressures can be found on the inside of the fuel tank flap or in ⇒ Maintenance ; Booklet 29

19.2 Wheel allocation for Polo Variant type 6KV model year 1998 to model year 2002

Explanation of information on wheels ⇒ page 59

Specified torques for wheel bolts ⇒ Running gear, axles, steering; Rep. gr. 40 ; Repairing front wheel suspension; II - Repairing wheel bearing

Pitch circle diameter:	100 mm
Number of wheel bolt holes:	4

19.2.1 $5^1/_2$ J x 13

Caution

Observe the allocation of wheels and tyres to the respective engines, which are listed in the overview table ⇒ page 118 .

For 40 kW und 44 kW vehicles

191 601 025 D - Wheel and tyre combination ⇒ page 118

Size:	$5^1/_2$ J x 13
Wheel offset in mm:	38
Wheel load in kg:	410

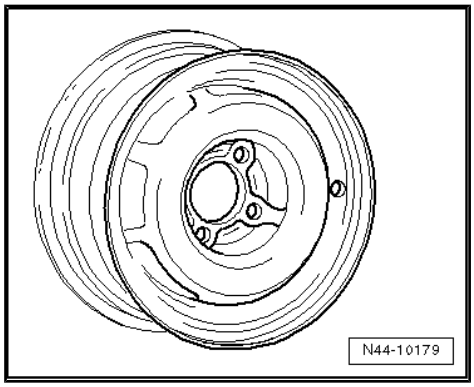

Protected by copyright. Copying for private or commercial purposes, in part or in whole, is not permitted unless authorised by Volkswagen AG. Volkswagen AG does not guarantee or accept any liability with respect to the correctness of information in this document. Copyright by Volkswagen AG.
satelettronica

Protected by copyright. Copyright by Volkswagen AG. Volkswagen AG does not guarantee or accept any liability with respect to the correctness of information in this document. Copyright by Volkswagen AG. Reproduction, in whole or in part, is not permitted unless authorised by Volkswagen AG. Volkswagen AG does not guarantee or accept any liability with respect to the correctness of information in this document. Copyright by Volkswagen AG.

1H0 601 025 A - Wheel and tyre combination ⇒ page 118

Size:	$5^1/_2$ J x 13
Wheel offset in mm:	38
Wheel load in kg:	450

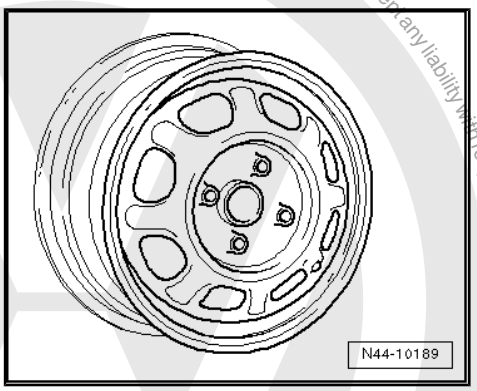

19.2.2 6 J x 14

Caution

Observe the allocation of wheels and tyres to the respective engines, which are listed in the overview table ⇒ page 118 *.*

For 40 kW and 44 kW vehicles - to VIN 6K W 530 000

1L0 601 025 J - Wheel and tyre combination ⇒ page 118

Size:	6 J x 14
Wheel offset in mm:	38
Wheel load in kg:	530

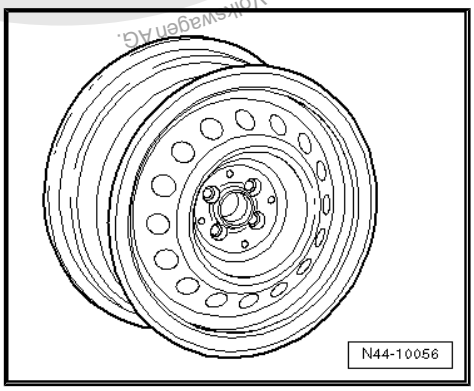

For 40 kW and 44 kW vehicles - from vehicle ID No. 6K W 530 001

6K9 601 027 - Wheel and tyre combination ⇒ page 118

Size:	6 J x 14
Wheel offset in mm:	38
Wheel load in kg:	530

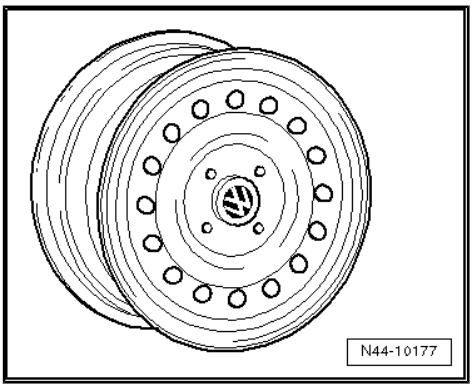

For all vehicles

satelettronica

321 601 025 H - Wheel and tyre combination ⇒ page 118

Size:	6 J x 14
Wheel offset in mm:	38
Wheel load in kg:	500

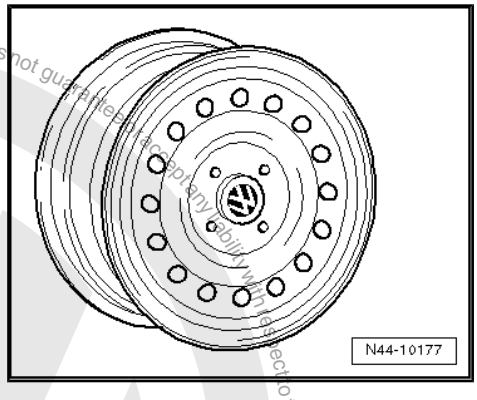

357 601 025 A/Q - Wheel and tyre combination ⇒ page 118

Size:	6 J x 14
Wheel offset in mm:	38
Wheel load in kg:	530

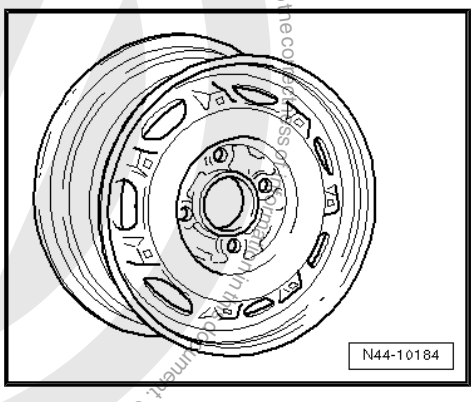

6K0 601 025 M - Wheel and tyre combination ⇒ page 118

Size:	6 J x 14
Wheel offset in mm:	38
Wheel load in kg:	450

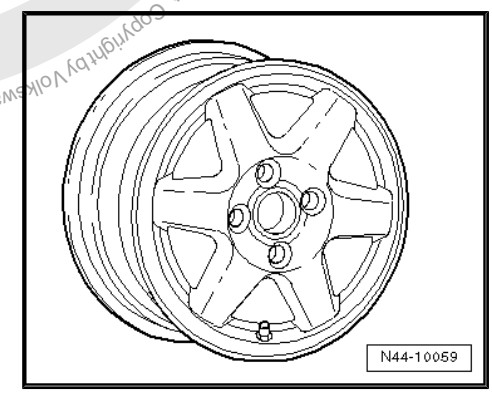

6K0 601 025 S - Wheel and tyre combination ⇒ page 118

Size:	6 J x 14
Wheel offset in mm:	38
Wheel load in kg:	450

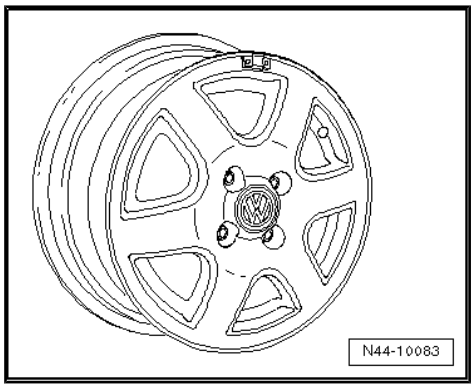

19.2.3 6 J x 15

Caution

Observe the allocation of wheels and tyres to the respective engines, which are listed in the overview table *⇒ page 118* *.*

Protected by copyright. Copyright by Volkswagen AG.
Volkswagen AG does not guarantee or accept any liability with respect to the correctness and completeness of this document.
Copying for private or commercial purposes, in part or in whole, is not permitted unless authorised by Volkswagen AG.
satelettronica

For all vehicles

6K0 601 025 Q - Wheel and tyre combination ⇒ page 119

Size:	6 J x 15
Wheel offset in mm:	38
Wheel load in kg:	450

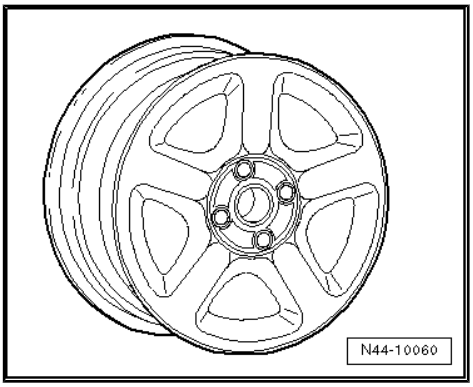

6K0 601 025 AB - Wheel and tyre combination ⇒ page 119

Size:	6 J x 15
Wheel offset in mm:	38
Wheel load in kg:	450

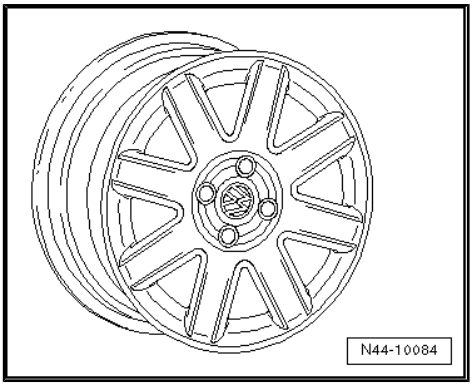

Protected by copyright. Copying for private or commercial purposes, in part or in whole, is not permitted unless authorised by Volkswagen AG. Volkswagen AG does not guarantee or accept any liability with respect to the correctness of information in this document. Copyright by Volkswagen AG.

satelettronica

20 Polo from model year 2002

General

Volkswagen vehicles are built according to the latest findings in safety engineering. To keep it that way, we recommend the use of only genuine Volkswagen spare parts. You can recognise this by the VW Audi logo and by the part number. It has been established that these parts are reliable, safe and suitable.

Despite constant appraisal of the market, we cannot assess other products on these points, even when in isolated cases they have been passed by official inspectors or have been granted official approval. Therefore, we cannot, of course, assume any liability if these products are installed.

> ⚠ **WARNING**
>
> *The products from Volkswagen genuine parts and Votex genuine accessories may differ in fitting requirements, torque specifications and so on.*
>
> *Always follow the respective fitting and operating instructions.*

The wheel and tyre combinations or changes listed in the vehicle tables refer exclusively to Volkswagen Genuine wheels. Approval of wheel and tyre combinations or a change to wheels from the accessories trade is not possible with the parts certificate attached here.

> ⚠ **WARNING**
>
> *The fitting instructions and torque specifications for wheels from Votex genuine accessories may differ from those intended for wheels from Volkswagen genuine parts.*
>
> *Therefore, always observe the torque settings for the wheel bolts as well as the respective fitting and operating instructions.*

20.1 Polo, type 9N model year 2002 to model year 2008

Appendix for parts certificate 3879/08

The parts certificate can be found on the Volkswagen ServiceNet under Technology; Guides; Wheels and Tyres Guide.

Type Approval No.: e1*98/14*0174*00 to e1*98/14*0174*04

Type Approval No.: e1*2001/116*0174*05 to e1*2001/116*0174*23

Overview

Model engine output	Tyres	Tyre size	Wheel rim	Off-set in mm	Snow chains	Remarks
1.2l 40 kW; 1.2l 44 kW without power steering	Standard tyres	155/80 R 13 79S	5 J x 13 ⇒ page 131	35	Yes	
	Standard tyres from model year 2003	155/80 R 13 79T	5 J x 13 ⇒ page 131	35	Yes	

Protected by Copyright. Copying for private or commercial purposes, in part or in whole, is not permitted unless authorised by Volkswagen AG. Volkswagen AG does not guarantee or accept any liability with respect to the correctness of information in this document. Copyright by Volkswagen AG.
satelettronica

Model engine output	Tyres	Tyre size	Wheel rim	Off-set in mm	Snow chains	Remarks
	Modification	No changes are permissible apart from the standard wheel and tyre combinations!				General information on: ◆ Winter tyres ⇒ page 15 ◆ Snow chains ⇒ page 18
	Winter tyres	155/80 R 13 79Q	5 J x 13 ⇒ page 131	35	Yes	Tyre makes recommended by Volkswagen: ◆ Summer tyres ⇒ page 639 ◆ All-season tyres ⇒ page 667 ◆ Winter tyres ⇒ page 678
1.2l 40 kW; 1.2l 44 kW with power steering; 1.2l 47 kW; 1.2l 51 kW; 1.4l 55 kW petrol engines; 1.4l 51 kW; 1.4l 55 kW; 1.4l 59 kW; 1.9l 47 kW diesel engines	Standard tyres	165/70 R 14 81T	5 J x 14 ⇒ page 132	35	Yes	
	Modification	185/60 R 14 82T/H	6 J x 14 ⇒ page 132	43	Yes	
		185/55 R 15 82T/H	6 J x 15 ⇒ page 134	43	Yes	
		195/50 R 15 82H	6 J x 15 ⇒ page 134	43	No	
		195/55 R 15 85T/H/V	6 J x 15 ⇒ page 134	43	No	
		205/45 R 16 83T/H/V/W * ⇒ page 125	$6^1/_2$ J x 16 ⇒ page 135	38	No	205/45 R 16 83T/H/V/W tyres on $6^1/_2$ J x 16 rims with an offset of 38 are only possible in combination with widened wheel housings (Flaps)!
		205/45 R 16 83T/H/V/W	$6^1/_2$ J x 16 ⇒ page 135	43	No	
	Winter tyres	165/70 R 14 81Q	5 J x 14 ⇒ page 132	35	Yes	
		185/55 R 15 82T/H	6 J x 15 ⇒ page 134	43	Yes	
1.4l 59 kW; 1.4l 63 kW petrol engine	Standard tyres	195/55 R15 85V	6 J x 15 ⇒ page 134	43	No	
	Modification	165/70 R 14 81T	5 J x 14 ⇒ page 132	35	Yes	
		185/60 R 14 82T/H	6 J x 14 ⇒ page 132	43	Yes	

Protected by copyright. Copying for private or commercial purposes, in part or in whole, is not permitted unless authorised by Volkswagen AG. Volkswagen AG does not guarantee or accept any liability with respect to the correctness of information in this document. Copyright by Volkswagen AG.
satelettronica

Model engine output	Tyres	Tyre size	Wheel rim	Off-set in mm	Snow chains	Remarks
		185/55 R 15 82T/H	6 J x 15 ⇒ page 134	43	Yes	
		195/50 R 15 82H	6 J x 15 ⇒ page 134	43	No	
		195/55 R 15 85T/H	6 J x 15 ⇒ page 134	43	No	
		205/45 R 16 83T/H/V/W * ⇒ page 126	$6^1/_2$ J x 16 ⇒ page 135	38	No	205/45 R 16 83T/H/V/W tyres on $6^1/_2$ J x 16 rims with an offset of 38 are only possible in combination with widened wheel housings (Flaps)!
		205/45 R 16 83T/H/V/W	$6^1/_2$ J x 16 ⇒ page 135	43	No	
	Winter tyres	185/55 R 15 82Q/T/H	6 J x 15 ⇒ page 134	43	Yes	
		185/60 R 14 82Q	6 J x 14 ⇒ page 132	43	Yes	
1.4l 74 kW; 1.6l 77 kW petrol engine	Standard tyres	185/60 R 14 82H	6 J x 14 ⇒ page 132	43	Yes	
1.9l 74 kW diesel engines	Modification	185/55 R 15 82H	6 J x 15 ⇒ page 134	43	Yes	
		195/50 R 15 82H/V	6 J x 15 ⇒ page 134	43	No	
		195/55 R 15 85H/V	6 J x 15 ⇒ page 134	43	No	
		205/45 R 16 83H/V/W * ⇒ page 126	$6^1/_2$ J x 16 ⇒ page 135	38	No	205/45 R 16 83H/V/W tyres on $6^1/_2$ J x 16 rims with an offset of 38 are only possible in combination with widened wheel housings (Flaps)!
		205/45 R 16 83H/V/W	$6^1/_2$ J x 16 ⇒ page 135	43	No	
	Winter tyres	185/60 R 14 82Q	6 J x 14 ⇒ page 132	43	Yes	
1.9l 96 kW diesel engines	Standard tyres	195/55 R 15 85V	6 J x 15 ⇒ page 134	43	No	

Protected by copyright. Copying for private or commercial purposes, in part or in whole, is not permitted unless authorised by Volkswagen AG. Volkswagen AG does not guarantee or accept any liability with respect to the correctness of information in this document. Copyright by Volkswagen AG.

satelettronica

Model engine output	Tyres	Tyre size	Wheel rim	Off-set in mm	Snow chains	Remarks
	Modification	205/45 R 16 83W * ⇒ page 127	$6^1/_2$ J x 16 ⇒ page 135	38	No	205/45 R 16 83W tyres on $6^1/_2$ J x 16 rims with an offset of 38 are only possible in combination with widened wheel housings (Flaps)!
		205/45 R 16 83W	$6^1/_2$ J x 16 ⇒ page 135	43	No	
	Winter tyres	185/55 R 15 86Q	6 J x 15 ⇒ page 134	43	Yes	

Tyre inflation pressures are located on a sticker in the fuel tank flap or in ⇒ Maintenance ; Booklet ; Check tyres: condition, profile, inflation pressure, depth of tread .

20.2 Polo, type 9N model year 2009

Appendix for parts certificate 3879/08

The parts certificate can be found on the Volkswagen ServiceNet under Technology; Guides; Wheels and Tyres Guide.

Type Approval No.: e1*2001/116*0174*24 to e1*2001/116*0174*25

Overview

Model engine output	Tyres	Tyre size	Wheel rim	Off-set in mm	Snow chains	Remarks
1.2l 44 kW with no PAS	Standard tyres	155/80 R 13 79T	5 J x 13 ⇒ page 131	35	Yes	General information on: ◆ Winter tyres ⇒ page 15 ◆ Snow chains ⇒ page 18 Tyre makes recommended by Volkswagen: ◆ Summer tyres ⇒ page 639 ◆ All-season tyres ⇒ page 667 ◆ Winter tyres ⇒ page 678
	Modification	No changes are permissible apart from the standard wheel and tyre combinations!				
	Winter tyres	155/80 R 13 79Q	5 J x 13 ⇒ page 131	35	Yes	
1.2l 44 kW with PAS; 1.2l 51 kW; 1.4l 59 kW petrol engines;	Standard tyres	165/70 R 14 81T	5 J x 14 ⇒ page 132	35	Yes	
1.4l 51 kW; 1.4l 59 kW; diesel engines	Modification	185/60 R 14 82T/H	6 J x 14 ⇒ page 132	43	Yes	
		185/55 R 15 82T/H	6 J x 15 ⇒ page 134	43	Yes	

Protected by copyright. Copying for private or commercial purposes, in part or in whole, is not permitted unless authorised by Volkswagen AG. Volkswagen AG does not guarantee or accept any liability with respect to the correctness of information in this document. Copyright by Volkswagen AG.
satelettronica

Model engine output	Tyres	Tyre size	Wheel rim	Off-set in mm	Snow chains	Remarks
		195/50 R 15 82H	6 J x 15 ⇒ page 134	43	No	
		195/55 R 15 85T/H/V	6 J x 15 ⇒ page 134	43	No	
		205/45 R 16 83T/H/V/W * ⇒ page 128	6 1/2 J x 16 ⇒ page 135	38	No	205/45 R 16 83T/H/V/W tyres on 6 1/2 J x 16 rims with an offset of 38 are only possible in combination with widened wheel housings (Flaps)!
		205/45 R 16 83T/H/V/W	6 1/2 J x 16 ⇒ page 135	43	No	
		205/40 R 17 84T/H/V/W * ⇒ page 128	7 1/2 J x 17 ⇒ page 138	38	No	205/40 R 17 84H/V/W tyres on 7 1/2 J x 17 rims with an offset of 38 are only permitted under the following conditions: ◆ Vehicles with 4 doors: curtain and side airbags may not be installed or must be deactivated. ◆ Sports running gear must be installed ◆ Widened wheel housings (Flaps) must be installed
	Winter tyres	165/70 R 14 81Q	5 J x 14 ⇒ page 132	35	Yes	
		185/55 R 15 82Q/T/H	6 J x 15 ⇒ page 134	43	Yes	
1.4l 55 kW petrol engine with automatic gear-box	Standard tyres	165/70 R 14 81T	5 J x 14 ⇒ page 132	35	Yes	
	Modification	185/60 R 14 82T/H	6 J x 14 ⇒ page 132	43	Yes	
		185/55 R 15 82T/H	6 J x 15 ⇒ page 134	43	Yes	
		195/50 R 15 82H	6 J x 15 ⇒ page 134	43	No	
		195/55 R 15 85T/H/V	6 J x 15 ⇒ page 134	43	No	

Copyright by Volkswagen AG. Volkswagen AG does not guarantee or accept any liability with respect to the correctness of information in this document. Copyright by Volkswagen AG. Protected by copyright. Copying for private or commercial purposes, in part or in whole, is not permitted unless authorised by Volkswagen AG.

satelettronica

Model engine output	Tyres	Tyre size	Wheel rim	Off-set in mm	Snow chains	Remarks
		205/45 R 16 83T/H/V/W * ⇒ page 129	$6^1/_2$ J x 16 ⇒ page 135	38	No	205/45 R 16 83T/H/V/W tyres on $6^1/_2$ J x 16 rims with an offset of 38 are only possible in combination with widened wheel housings (Flaps)!
		205/45 R 16 83T/H/V/W	$6^1/_2$ J x 16 ⇒ page 135	43	No	
	Winter tyres	165/70 R 14 81Q	5 J x 14 ⇒ page 132	35	Yes	
		185/55 R 15 82Q/T/H	6 J x 15 ⇒ page 134	43	Yes	
1.4l 74 kW petrol engine	Standard tyres	185/60 R 14 82H	6 J x 14 ⇒ page 132	43	Yes	205/45 R 16 83H/V/W tyres on $6^1/_2$ J x 16 rims with an offset of 38 are only possible in combination with widened wheel housings (Flaps)!
	Modification	185/55 R 15 82H	6 J x 15 ⇒ page 134	43	Yes	
		195/50 R 15 82H/V	6 J x 15 ⇒ page 134	43	No	
		195/55 R 15 85H/V	6 J x 15 ⇒ page 134	43	No	
		205/45 R 16 83H/V/W * ⇒ page 129	$6^1/_2$ J x 16 ⇒ page 135	38	No	
		205/45 R 16 83H/V/W	$6^1/_2$ J x 16 ⇒ page 135	43	No	
	Winter tyres	185/60 R 14 82Q	6 J x 14 ⇒ page 132	43	Yes	
		185/55 R 15 82Q/T/H	6 J x 15 ⇒ page 134	43	Yes	
1.6l 77 kW petrol engine 1.9l 74 kW diesel engine	Standard tyres	185/60 R 14 82H	6 J x 14 ⇒ page 132	43	Yes	
	Modification	185/55 R 15 82H	6 J x 15 ⇒ page 134	43	Yes	
		195/50 R 15 82H/V	6 J x 15 ⇒ page 134	43	No	
		195/55 R 15 85H/V	6 J x 15 ⇒ page 134	43	No	

Protected by copyright. Copying for private or commercial purposes, in part or in whole, is not permitted unless authorised by Volkswagen AG. Volkswagen AG does not guarantee or accept any liability with respect to the correctness of information in this document. Copyright by Volkswagen AG.

satelettronica

Model engine output	Tyres	Tyre size	Wheel rim	Off-set in mm	Snow chains	Remarks
		205/45 R 16 83H/V/W * ⇒ page 130	$6^1/_2$ J x 16 ⇒ page 135	38	No	205/45 R 16 83H/V/W tyres on $6^1/_2$ J x 16 rims with an offset of 38 are only possible in combination with widened wheel housings (Flaps)!
		205/45 R 16 83H/V/W	$6^1/_2$ J x 16 ⇒ page 135	43	No	
		205/40 R 17 84H/V/W * ⇒ page 130	$7^1/_2$ J x 17 ⇒ page 138	38	No	205/40 R 17 84H/V/W tyres on $7^1/_2$ J x 17 rims with an offset of 38 are only permitted under the following conditions: ◆ Vehicles with 4 doors: curtain and side airbags may not be installed or must be deactivated ◆ Sports running gear must be installed ◆ Widened wheel housings (Flaps) must be installed
	Winter tyres	185/60 R 14 82Q	6 J x 14 ⇒ page 132	43	Yes	
		185/55 R 15 82Q/T/H	6 J x 15 ⇒ page 134	43	Yes	
1.9l 96 kW diesel engines	Standard tyres	195/55 R 15 85V	6 J x 15 ⇒ page 134	43	No	
	Modification	205/45 R 16 83W * ⇒ page 130	$6^1/_2$ J x 16 ⇒ page 135	38	No	205/45 R 16 83W tyres on $6^1/_2$ J x 16 rims with an offset of 38 are only possible in combination with widened wheel housings (Flaps)!
		205/45 R 16 83W	$6^1/_2$ J x 16 ⇒ page 135	43	No	

Protected by copyright. Copying for private or commercial purposes, in part or in whole, is not permitted unless authorised by Volkswagen AG. Volkswagen AG does not guarantee or accept any liability with respect to the correctness of information in this document. Copyright by Volkswagen AG.
satelettronica

Model engine output	Tyres	Tyre size	Wheel rim	Off-set in mm	Snow chains	Remarks
		205/40 R 17 84W * ⇒ page 131	$7^1/_2$ J x 17 ⇒ page 138	38	No	205/40 R 17 84W tyres on $7^1/_2$ J x 17 rims with an offset of 38 are only permitted under the following conditions: ◆ Vehicles with 4 doors: curtain and side airbags may not be installed or must be deactivated ◆ Sports running gear must be installed ◆ Widened wheel housings (Flaps) must be installed
	Winter tyres	185/55 R 15 86Q	6 J x 15 ⇒ page 134	43	Yes	

Tyre inflation pressures are located on a sticker in the fuel tank flap or in ⇒ Maintenance ; Booklet ; Check tyres: condition, profile, inflation pressure, depth of tread .

20.3 Wheel allocation for Polo, type 9N model year 2002 to model year 2009

Explanation of information on wheels ⇒ page 59

Torque specifications for wheel bolts ⇒ Running gear, axles, steering; Rep. gr. 44 ; Fitting wheels and tyres; Fitting wheels

Pitch circle diameter:	100 mm
Number of wheel bolt holes:	5

20.3.1 5 J x 13

Caution

Observe the allocation of wheels and tyres to the respective engines, which are listed in the overview table ⇒ page 124 .

Volkswagen AG. Volkswagen AG does not guarantee or accept any liability with respect to the correctness of information in this document. Copyright by Volkswagen AG. Protected by copyright. Copying for private or commercial purposes, in part or in whole, is not permitted unless authorised by Volkswagen AG.

satelettronica

For 1.2l 40 kW, 44 kW without power steering

6Q0 601 027 E - Wheel and tyre combination ⇒ page 124

Size:	5 J x 13
Wheel offset in mm:	35
Wheel load in kg:	400

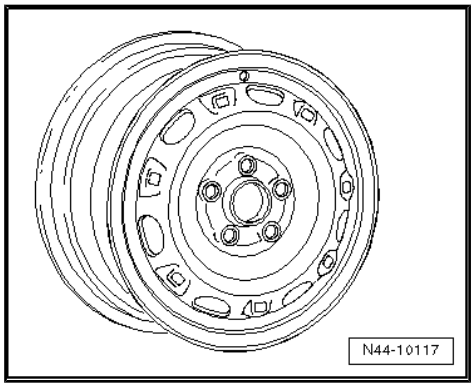

20.3.2 5 J x 14

Caution

Observe the allocation of wheels and tyres to the respective engines, which are listed in the overview table ⇒ page 124 *.*

For 1.2l 40 kW, 44 kW with power steering, 1.2l 47 kW, 51 kW, 1.4l 55 kW, 59 kW; 63 kW and 74 kW, 1.6l 77 kW, 1.4l 51 kW, 55 kW, 59 kW diesel, 1.9l 47 kW

6Q0 601 027 H, 6Q0 601 027 R - Wheel and tyre combination ⇒ page 125

Size:	5 J x 14
Wheel offset in mm:	35
Wheel load in kg:	455

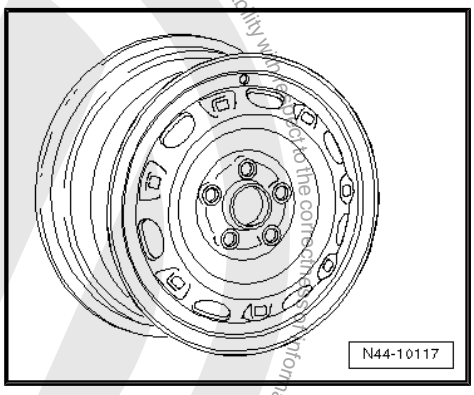

6Q0 601 025 AC - Wheel and tyre combination ⇒ page 125

Only for vehicles to maximum permissible axle load of 870 kg

Size:	5 J x 14
Wheel offset in mm:	35
Wheel load in kg:	435

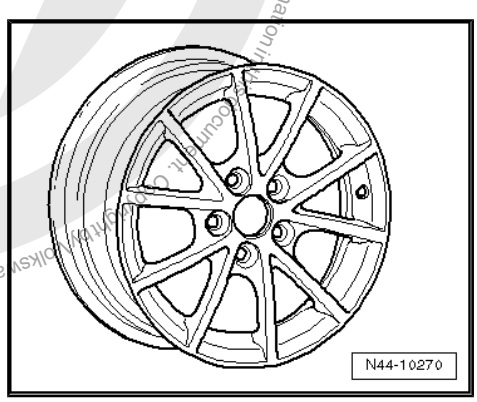

20.3.3 6 J x 14

Caution

Observe the allocation of wheels and tyres to the respective engines, which are listed in the overview table ⇒ page 124 *.*

Protected by copyright. Copying for private or commercial purposes, in part or in whole is not permitted unless authorised by Volkswagen AG. Volkswagen AG does not guarantee or accept any liability with respect to the correctness of information in this document. Copyright by Volkswagen AG.
satelettronica

Protected by copyright. Copyright by Volkswagen AG. Volkswagen AG does not guarantee or accept any liability with respect to the correctness of information in this document. Copyright by Volkswagen AG. Reproduction, distribution or publication for commercial purposes, in part or in whole, not permitted unless authorised by Volkswagen AG.

For 1.2l 40 kW, 44 kW with power steering, 1.2l 47 kW, 51 kW, 1.4l 55 kW, 59 kW; 63 kW and 74 kW, 1.6l 77 kW, 1.4l 51 kW, 55 kW, 59 kW diesel, 1.9l 47 kW, 74 kW

6Q0 601 027 F, 6Q0 601 027 P - Wheel and tyre combination ⇒ page 125

Size:	6 J x 14
Wheel offset in mm:	43
Wheel load in kg:	465

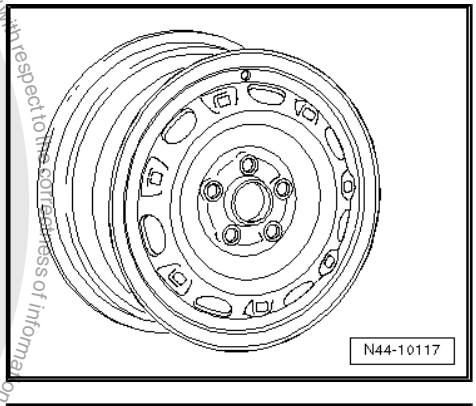

6Q0 601 025 Q - Wheel and tyre combination ⇒ page 125

Size:	6 J x 14
Wheel offset in mm:	43
Wheel load in kg:	465

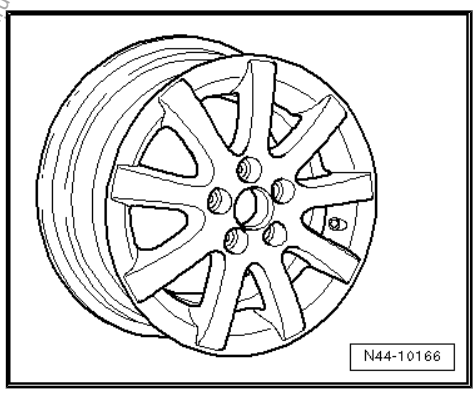

6Q0 601 025 K - Wheel and tyre combination ⇒ page 125

Size:	6 J x 14
Wheel offset in mm:	43
Wheel load in kg:	465

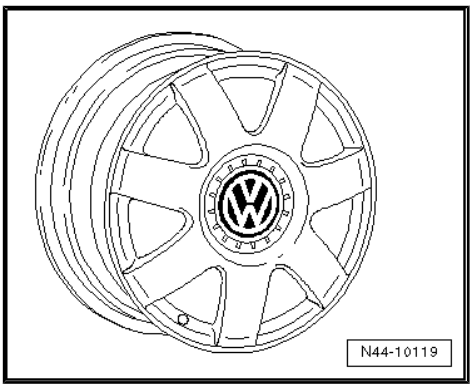

6Q0 601 025 AB - Wheel and tyre combination ⇒ page 125

Size:	6 J x 14
Wheel offset in mm:	43
Wheel load in kg:	465

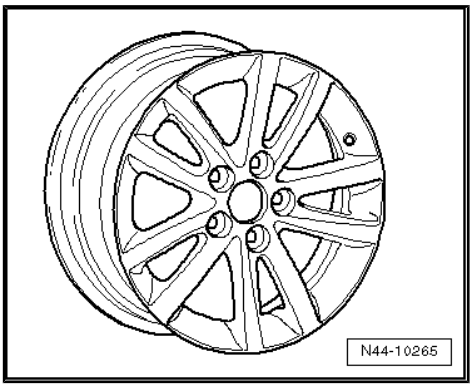

satelettronica

20.3.4 6 J x 15

Caution

Observe the allocation of wheels and tyres to the respective engines, which are listed in the overview table ⇒ page 124 *.*

For 1.2l 40 kW, 44 kW with power steering, 1.2l 47 kW, 51 kW, 1.4l 55 kW, 59 kW; 63 kW and 74 kW, 1.6l 77 kW, 1.4l 51 kW, 55 kW, 59 kW diesel, 1.9l 47 kW, 74 kW

6Q0 601 027 G, 6Q0 601 027 Q - Wheel and tyre combination ⇒ page 125

Size:	6 J x 15
Wheel offset in mm:	43
Wheel load in kg:	500

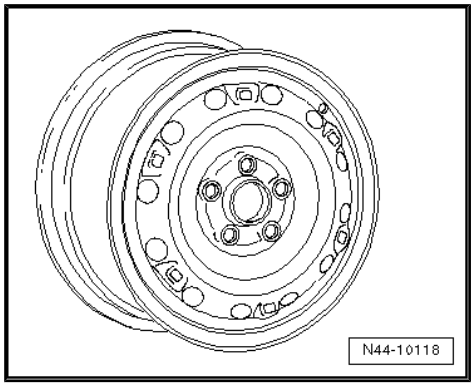

6Q0 601 025 L - Wheel and tyre combination ⇒ page 125

Size:	6 J x 15
Wheel offset in mm:	43
Wheel load in kg:	475

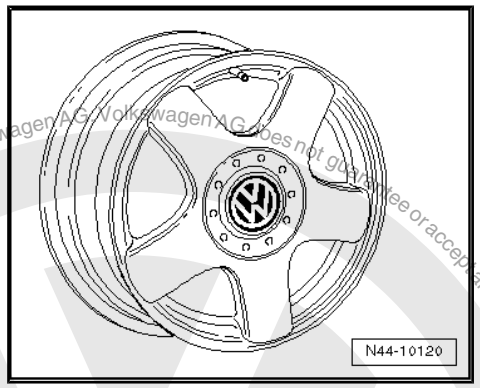

6Q0 601 025 R - Wheel and tyre combination ⇒ page 125

Size:	6 J x 15
Wheel offset in mm:	43
Wheel load in kg:	480

For 96 kW diesel

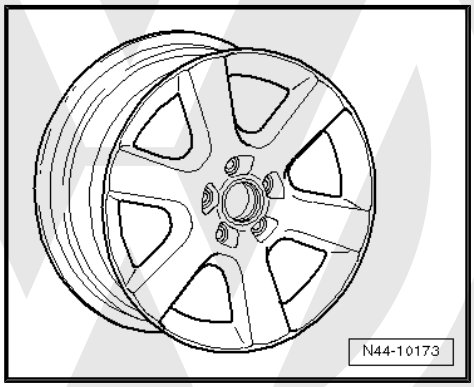

Protected by copyright. Copying for private or commercial purposes, in part or in whole, is not permitted unless authorised by Volkswagen AG. Volkswagen AG does not guarantee or accept any liability with respect to the correctness of information in this document. Copyright by Volkswagen AG.
satelettronica

6Q0 601 027 G, 6Q0 601 027 Q - Wheel and tyre combination ⇒ page 126

Size:	6 J x 15
Wheel offset in mm:	43
Wheel load in kg:	500

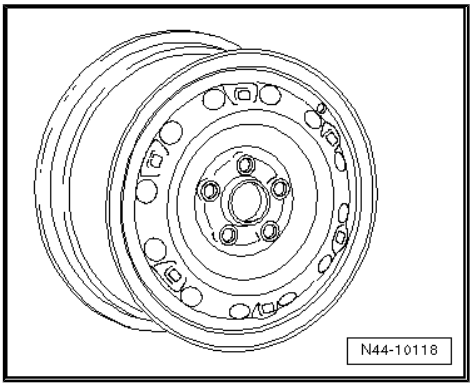

6Q0 601 025 R - Wheel and tyre combination ⇒ page 125

Size:	6 J x 15
Wheel offset in mm:	43
Wheel load in kg:	480

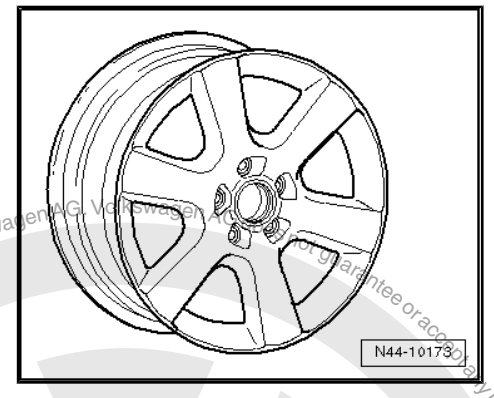

20.3.5 6$^1/_2$ J x 16 offset 38

Caution

Observe the allocation of wheels and tyres to the respective engines, which are listed in the overview table *⇒ page 124* *.*

205/45 R 16 83T/H/V/W tyres on 6$^1/_2$ J x 16 rims with an offset of 38 are only possible in combination with widened wheel housings (Flaps)!

6Q0 601 025 AD - Wheel and tyre combination ⇒ page 125

Size:	6$^1/_2$ J x 16
Wheel offset in mm:	38
Wheel load in kg:	480

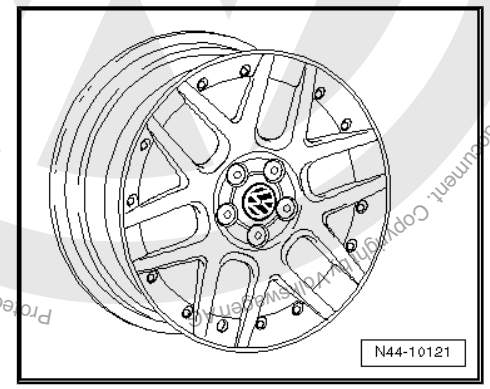

20.3.6 6$^1/_2$ J x 16 offset 43

Caution

Observe the allocation of wheels and tyres to the respective engines, which are listed in the overview table *⇒ page 124* *.*

Protected by copyright. Copying for private or commercial purposes, in part or in whole, is not permitted unless authorised by Volkswagen AG. Volkswagen AG does not guarantee or accept any liability with respect to the correctness of information in this document. Copyright by Volkswagen AG.
satelitronica

For 1.2l 40 kW, 44 kW with power steering, 1.2l 47 kW, 51 kW, 1.4l 55 kW, 59 kW; 63 kW and 74 kW, 1.6l 77 kW, 1.4l 51 kW, 55 kW, 59 kW diesel, 1.9l 47 kW, 74 kW

6Q0 601 025 C - Wheel and tyre combination ⇒ page 125

Size:	$6^1/_2$ J x 16
Wheel offset in mm:	43
Wheel load in kg:	480

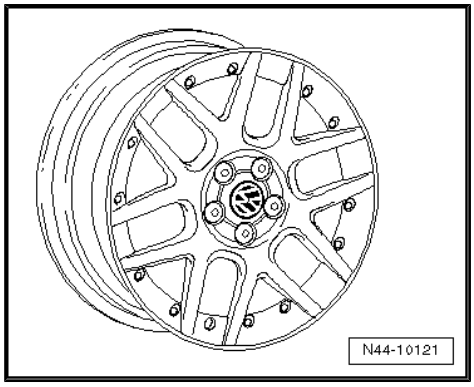

6Q0 601 025 D - Wheel and tyre combination ⇒ page 125

Size:	$6^1/_2$ J x 16
Wheel offset in mm:	43
Wheel load in kg:	475

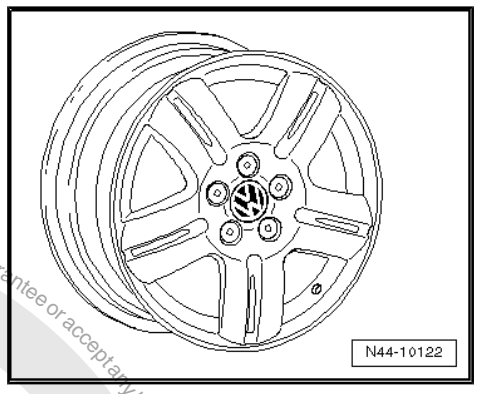

6Q0 601 025 S - Wheel and tyre combination ⇒ page 125

Size:	$6^1/_2$ J x 16
Wheel offset in mm:	43
Wheel load in kg:	480

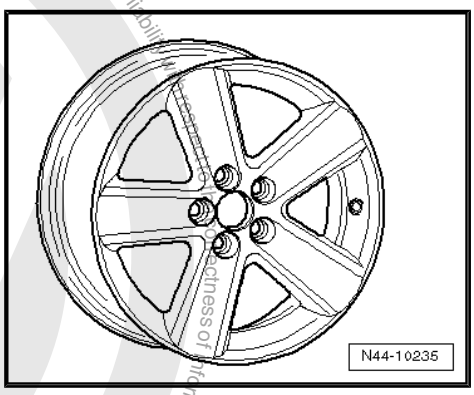

6Q0 601 025 T - Wheel and tyre combination ⇒ page 125

Size:	$6^1/_2$ J x 16
Wheel offset in mm:	43
Wheel load in kg:	480

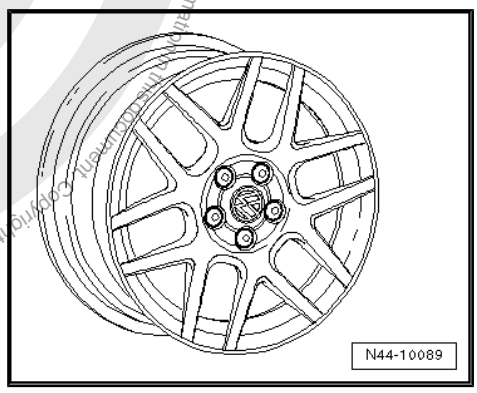

Protected by copyright. Copying for private or commercial purposes, in part or in whole, is not permitted unless authorised by Volkswagen AG. Volkswagen AG does not guarantee or accept any liability with respect to the correctness of information in this document. Copyright by Volkswagen AG.
satelettronica

6Q0 601 025 AA - Wheel and tyre combination ⇒ page 125

Size:	$6^1/_2$ J x 16
Wheel offset in mm:	43
Wheel load in kg:	480

For 96 kW diesel

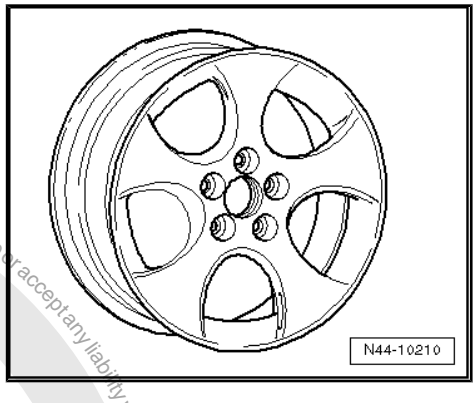

6Q0 601 025 C - Wheel and tyre combination ⇒ page 125

Size:	$6^1/_2$ J x 16
Wheel offset in mm:	43
Wheel load in kg:	480

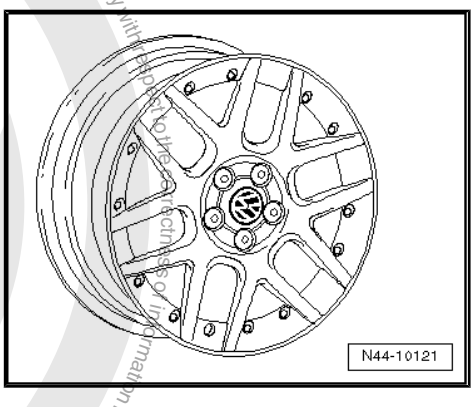

6Q0 601 025 S - Wheel and tyre combination ⇒ page 125

Size:	$6^1/_2$ J x 16
Wheel offset in mm:	43
Wheel load in kg:	480

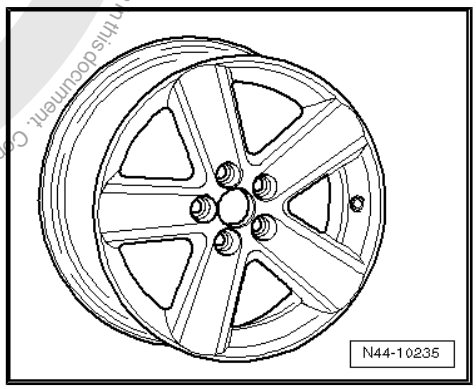

6Q0 601 025 T - Wheel and tyre combination ⇒ page 125

Size:	$6^1/_2$ J x 16
Wheel offset in mm:	43
Wheel load in kg:	480

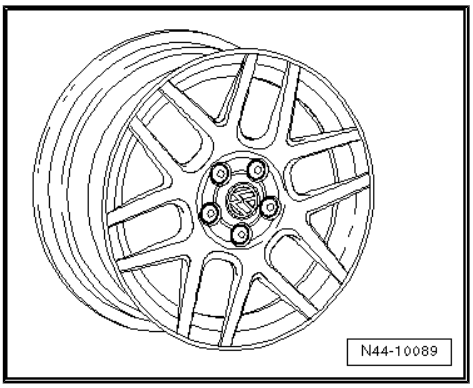

Protected by copyright. Copying for private or commercial purposes, in part or in whole, is not permitted unless authorised by Volkswagen AG. Volkswagen AG does not guarantee or accept any liability with respect to the correctness of information in this document. Copyright by Volkswagen AG.
satelettronica

6Q0 601 025 AA - Wheel and tyre combination ⇒ page 125

Size:	6 1/2 J x 16
Wheel offset in mm:	43
Wheel load in kg:	480

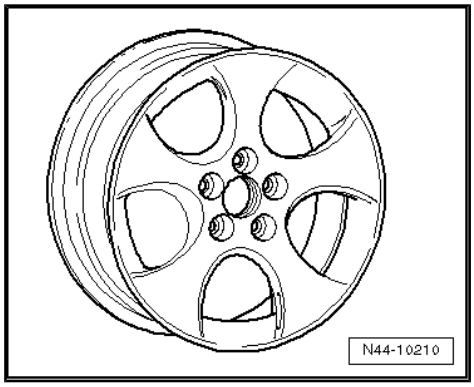

20.3.7 7 1/2 J x 17 offset 38

Caution

Observe the allocation of wheels and tyres to the respective engines, which are listed in the overview table *⇒ page 124* *.*

WARNING

205/40 R 17 84H/V/W tyres on 7 1/2 J x 17 wheels with offset 38 are only permitted under the following conditions:

- *Vehicles with 4 doors: curtain and side airbags may not be installed or must be deactivated*
- *Sports running gear must be installed*
- *Widened wheel housings (Flaps) must be installed*

1J0 601 025 BC - Wheel and tyre combination ⇒ page 128

Size:	7 1/2 J x 17
Wheel offset in mm:	38
Wheel load in kg:	550

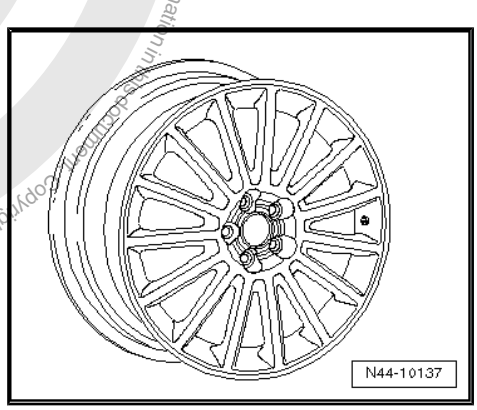

Protected by copyright. Copying for private or commercial purposes, in part or in whole, is not permitted unless authorised by Volkswagen AG. Volkswagen AG does not guarantee or accept any liability with respect to the correctness of information in this document. Copyright by Volkswagen AG.
satelettronica

21 Polo Fun model year 2004 to model year 2005

General

Volkswagen vehicles are built according to the latest findings in safety engineering. To keep it that way, we recommend the use of only genuine Volkswagen spare parts. You can recognise this by the VW Audi logo and by the part number. It has been established that these parts are reliable, safe and suitable.

Despite constant appraisal of the market, we cannot assess other products on these points, even when in isolated cases they have been passed by official inspectors or have been granted official approval. Therefore, we cannot, of course, assume any liability if these products are installed.

> ⚠ **WARNING**
>
> *The products from Volkswagen genuine parts and Votex genuine accessories may differ in fitting requirements, torque specifications and so on.*
>
> *Always follow the respective fitting and operating instructions.*

The wheel and tyre combinations or changes listed in the vehicle tables refer exclusively to Volkswagen Genuine wheels. Approval of wheel and tyre combinations or a change to wheels from the accessories trade is not possible with the parts certificate attached here.

> ⚠ **WARNING**
>
> *The fitting instructions and torque specifications for wheels from Votex genuine accessories may differ from those intended for wheels from Volkswagen genuine parts.*
>
> *Therefore, always observe the torque settings for the wheel bolts as well as the respective fitting and operating instructions.*

21.1 Polo Fun, type 9N model year 2004 to model year 2005

Appendix for parts certificate 3176/05

The parts certificate can be found on the Volkswagen ServiceNet under Technology; Guides; Wheels and Tyres Guide.

Type Approval No.: e1*2001/116*0174*07 to e1*2001/116*0174*14

Overview

Model engine output	Tyres	Tyre size	Wheel rim	Off-set in mm	Snow chains	Remarks
1.2l 40 kW 1.2l 47 kW 1.4l 55 kW 1.4l 63 kW 1.4l 74 kW petrol engines	Standard tyres	215/40 ZR 17 83W	$7^1/_2$ J x 17 ⇒ page 140	35	No	General information on: ◆ Winter tyres ⇒ page 15 ◆ Snow chains ⇒ page 18

Protected by copyright. Copying for private or commercial purposes, in part or in whole, is not permitted unless authorised by Volkswagen AG. Volkswagen AG does not guarantee or accept any liability with respect to the correctness of information in this document. Copyright by Volkswagen AG.
satelettronica

Model engine output	Tyres	Tyre size	Wheel rim	Off-set in mm	Snow chains	Remarks
1.4l 55 kW 1.9l 74 kW diesel engines	Modification	No changes are permissible apart from the standard wheel and tyre combinations!				Tyre makes recommended by Volkswagen:
	Winter tyres	185/60 R 15 84Q/T	6 J x 15 ⇒ page 140	38	Yes	♦ Summer tyres ⇒ page 640 ♦ Winter tyres ⇒ page 678

Tyre inflation pressures are located on a sticker in the fuel tank flap or in ⇒ Maintenance ; Booklet ; Check tyres: condition, profile, inflation pressure, depth of tread .

21.2 Wheel allocation for Polo Fun, type 9N model year 2004 to model year 2005

Explanation of information on wheels ⇒ page 59

Torque specifications for wheel bolts ⇒ Running gear, axles, steering; Rep. gr. 44 ; Fitting wheels and tyres; Fitting wheels

Pitch circle diameter: 100 mm

Number of wheel bolt holes: 5

21.2.1 6 J x 15

Caution

Observe the allocation of wheels and tyres to the respective engines, which are listed in the overview table ⇒ page 139 .

1J0 601 027 Q - Wheel and tyre combination ⇒ page 140

Winter wheel

Size:	6 J x 15
Wheel offset in mm:	38
Wheel load in kg:	550

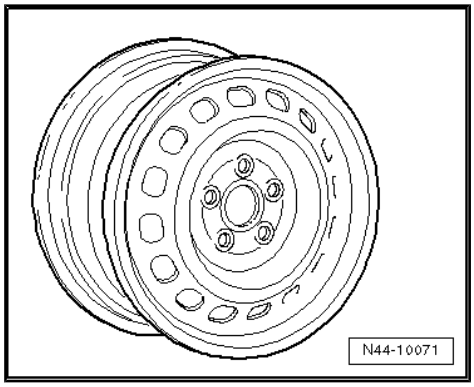

21.2.2 7½ J x 17

Caution

Observe the allocation of wheels and tyres to the respective engines, which are listed in the overview table ⇒ page 139 .

Protected by copyright. Copying for private or commercial purposes, in part or in whole, is not permitted unless authorised by Volkswagen AG. Volkswagen AG does not guarantee or accept any liability with respect to the correctness of information in this document. Copyright by Volkswagen AG.
satelettronica

6Q0 601 025 J - Wheel and tyre combination ⇒ page 139

Size:	$7^1/_2$ J x 17
Wheel offset in mm:	35
Wheel load in kg:	480

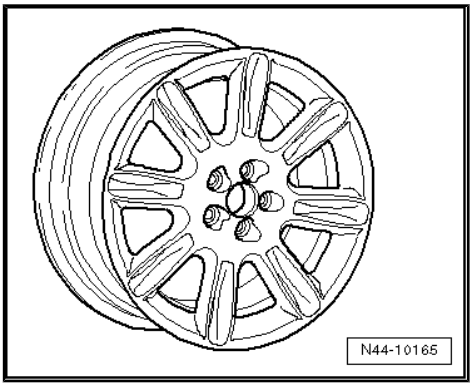

Protected by copyright. Copying for private or commercial purposes, in part or in whole, is not permitted unless authorised by Volkswagen AG. Volkswagen AG does not guarantee or accept any liability with respect to the correctness of information in this document. Copyright by Volkswagen AG.

satelettronica

22 CrossPolo from model year 2006

General

Volkswagen vehicles are built according to the latest findings in safety engineering. To keep it that way, we recommend the use of only genuine Volkswagen spare parts. You can recognise this by the VW Audi logo and by the part number. It has been established that these parts are reliable, safe and suitable.

Despite constant appraisal of the market, we cannot assess other products on these points, even when in isolated cases they have been passed by official inspectors or have been granted official approval. Therefore, we cannot, of course, assume any liability if these products are installed.

> ⚠ WARNING
>
> *The products from Volkswagen genuine parts and Votex genuine accessories may differ in fitting requirements, torque specifications and so on.*
>
> *Always follow the respective fitting and operating instructions.*

The wheel and tyre combinations or changes listed in the vehicle tables refer exclusively to Volkswagen Genuine wheels. Approval of wheel and tyre combinations or a change to wheels from the accessories trade is not possible with the parts certificate attached here.

> ⚠ WARNING
>
> *The fitting instructions and torque specifications for wheels from Votex genuine accessories may differ from those intended for wheels from Volkswagen genuine parts.*
>
> *Therefore, always observe the torque settings for the wheel bolts as well as the respective fitting and operating instructions.*

22.1 CrossPolo, type 9N model year 2006 to model year 2009

Appendix for parts certificate 3879/08

The parts certificate can be found on the Volkswagen ServiceNet under Technology; Guides; Wheels and Tyres Guide.

Type Approval No.: e1*2001/116*0174*15 to e1*2001/116*0174*25

Overview

Model engine output	Tyres	Tyre size	Wheel rim	Offset in mm	Snow chains	Remarks
1.2l 47 kW 1.2l 51 kW 1.4l 55 kW 1.4l 59 kW 1.4l 74 kW 1.6l 77 kW petrol engines	Standard tyres	215/40 ZR 17 83W	$7^{1}/_{2}$ J x 17 ⇒ page 143	35	No	General information on: ♦ Winter tyres ⇒ page 15 ♦ Snow chains ⇒ page 18
1.4l 51 kW 1.9l 74 kW diesel engines	Modification	No changes are permissible apart from the standard wheel and tyre combinations!				Tyre makes recommended by Volkswagen:

Protected by copyright. Copying for private or commercial purposes, in part or in whole, is not permitted unless authorised by Volkswagen AG. Volkswagen AG does not guarantee or accept any liability with respect to the correctness of information in this document. Copyright by Volkswagen AG.

sateletronica

Model engine output	Tyres	Tyre size	Wheel rim	Off-set in mm	Snow chains	Remarks
	Winter tyres	185/60 R 15 84Q/T	6 J x 15 ⇒ page 143	38	Yes	◆ Summer tyres ⇒ page 640 ◆ Winter tyres ⇒ page 678

Tyre inflation pressures are located on a sticker in the fuel tank flap or in ⇒ Maintenance ; Booklet ; Check tyres: condition, profile, inflation pressure, depth of tread .

22.2 Wheel allocation for CrossPolo, type 9N model year 2006 to model year 2009

Explanation of information on wheels ⇒ page 59

Torque specifications for wheel bolts ⇒ Running gear, axles, steering; Rep. gr. 44 ; Fitting wheels and tyres; Fitting wheels

Pitch circle diameter:	100 mm
Number of wheel bolt holes:	5

22.2.1 6 J x 15

Caution

Observe the allocation of wheels and tyres to the respective engines, which are listed in the overview table ⇒ page 142 .

1J0 601 027 Q - Wheel and tyre combination ⇒ page 143

Winter wheel

Size:	6 J x 15
Wheel offset in mm:	38
Wheel load in kg:	550

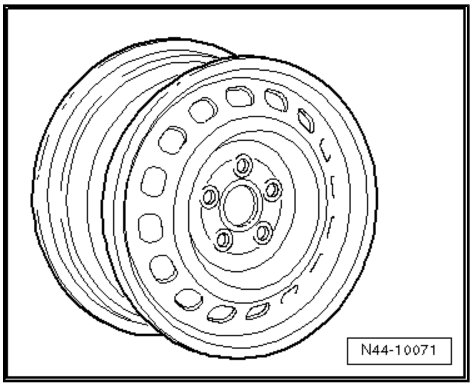

22.2.2 7 1/2 J x 17

Caution

Observe the allocation of wheels and tyres to the respective engines, which are listed in the overview table ⇒ page 142 .

Protected by copyright. Copying for private or commercial purposes, in part or in whole, is not permitted unless authorised by Volkswagen AG. Volkswagen AG does not guarantee or accept any liability with respect to the correctness of information in this document. Copyright by Volkswagen AG.

6Q0 601 025 J - Wheel and tyre combination ⇒ page 142

Size:	$7^1/_2$ J x 17
Wheel offset in mm:	35
Wheel load in kg:	480

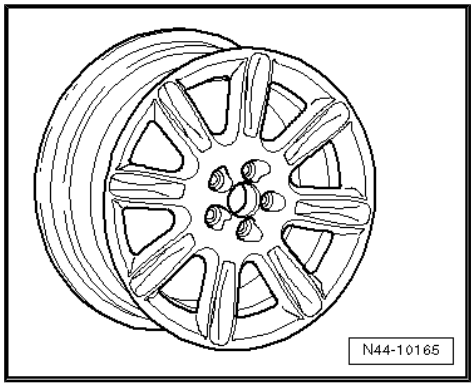

6Q0 601 025 AF- Wheel and tyre combination ⇒ page 142

Size:	$7^1/_2$ J x 17
Wheel offset in mm:	35
Wheel load in kg:	480

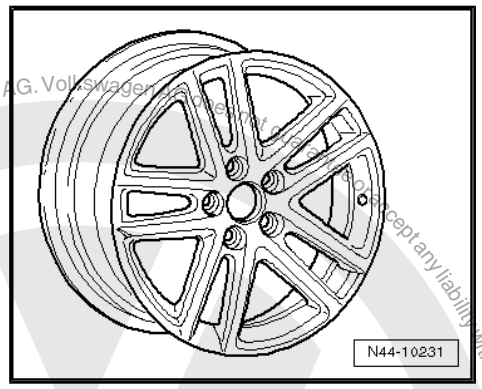

Protected by copyright. Copying for private or commercial purposes, in part or in whole, is not permitted unless authorised by Volkswagen AG. Volkswagen AG does not guarantee or accept any liability with respect to the correctness of information in this document. Copyright by Volkswagen AG.
satelettronica

23 Polo BlueMotion from model year 2007

General

Volkswagen vehicles are built according to the latest findings in safety engineering. To keep it that way, we recommend the use of only genuine Volkswagen spare parts. You can recognise this by the VW Audi logo and by the part number. It has been established that these parts are reliable, safe and suitable.

Despite constant appraisal of the market, we cannot assess other products on these points, even when in isolated cases they have been passed by official inspectors or have been granted official approval. Therefore, we cannot, of course, assume any liability if these products are installed.

> ⚠ **WARNING**
>
> *The products from Volkswagen genuine parts and Votex genuine accessories may differ in fitting requirements, torque specifications and so on.*
>
> *Always follow the respective fitting and operating instructions.*

The wheel and tyre combinations or changes listed in the vehicle tables refer exclusively to Volkswagen Genuine wheels. Approval of wheel and tyre combinations or a change to wheels from the accessories trade is not possible with the parts certificate attached here.

> ⚠ **WARNING**
>
> *The fitting instructions and torque specifications for wheels from Votex genuine accessories may differ from those intended for wheels from Volkswagen genuine parts.*
>
> *Therefore, always observe the torque settings for the wheel bolts as well as the respective fitting and operating instructions.*

23.1 Polo BlueMotion, type 9N model year 2007 to model year 2009

Appendix for parts certificate 3879/08

The parts certificate can be found on the Volkswagen ServiceNet under Technology; Guides; Wheels and Tyres Guide.

Type Approval No.: e1*2001/116*0174*17 to e1*2001/116*0174*25

Overview

Model engine output	Tyres	Tyre size	Wheel rim	Off-set in mm	Snow chains	Remarks
1.4l 59 kW diesel engine	Standard tyres	165/70 R14 81T	5 J x 14 ⇒ page 146	35	Yes	General information on: ◆ Winter tyres ⇒ page 15 ◆ Snow chains ⇒ page 18

Protected by copyright. Copying for private or commercial purposes, in part or in whole, is not permitted unless authorised by Volkswagen AG. Volkswagen AG does not guarantee or accept any liability with respect to the correctness of information in this document. Copyright by Volkswagen AG.
satelettronica

Model engine output	Tyres	Tyre size	Wheel rim	Off-set in mm	Snow chains	Remarks
	Modification	No changes are permissible apart from the standard wheel and tyre combinations!				Tyre makes recommended by Volkswagen:
	Winter tyres	165/70 R14 81Q	5 J x 14 ⇒ page 146	35	Yes	♦ Summer tyres ⇒ page 641 ♦ Winter tyres ⇒ page 678

Tyre inflation pressures are located on a sticker in the fuel tank flap or in ⇒ Maintenance ; Booklet ; Check tyres: condition, profile, inflation pressure, depth of tread .

23.2 Wheel allocation for Polo BlueMotion, type 9N model year 2007 to model year 2009

Explanation of information on wheels ⇒ page 59

Torque specifications for wheel bolts ⇒ Running gear, axles, steering; Rep. gr. 44 ; Fitting wheels and tyres; Fitting wheels

Pitch circle diameter:	100 mm
Number of wheel bolt holes:	5

23.2.1 5 J x 14

Caution

Observe the allocation of wheels and tyres to the respective engines, which are listed in the overview table ⇒ page 145 .

6Q0 601 027 H, 6Q0 601 027 R - Wheel and tyre combination
⇒ page 145

Size:	5 J x 14
Wheel offset in mm:	35
Wheel load in kg:	455

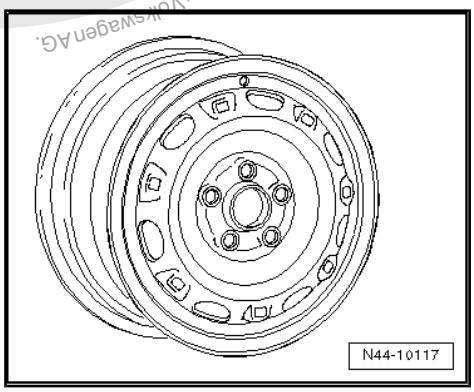

Reproduction for private or commercial purposes, in part or in whole, is not permitted unless authorised by Volkswagen AG. Volkswagen AG does not guarantee or accept any liability with respect to the correctness of information in this document. Copyright by Volkswagen AG.
satelettronica

6Q0 601 025 AC - Wheel and tyre combination ⇒ page 145

Size:	5 J x 14
Wheel offset in mm:	35
Wheel load in kg:	435

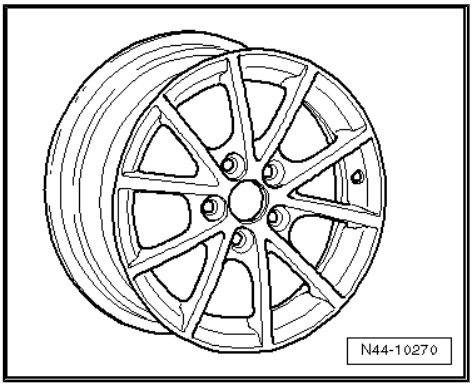

Protected by copyright. Copying for private or commercial purposes, in part or in whole, is not permitted unless authorised by Volkswagen AG. Volkswagen AG does not guarantee or accept any liability with respect to the correctness of information in this document. Copyright by Volkswagen AG.

satelettronica

24 Polo GTI from model year 2006

General

Volkswagen vehicles are built according to the latest findings in safety engineering. To keep it that way, we recommend the use of only genuine Volkswagen spare parts. You can recognise this by the VW Audi logo and by the part number. It has been established that these parts are reliable, safe and suitable.

Despite constant appraisal of the market, we cannot assess other products on these points, even when in isolated cases they have been passed by official inspectors or have been granted official approval. Therefore, we cannot, of course, assume any liability if these products are installed.

> ⚠ **WARNING**
>
> *The products from Volkswagen genuine parts and Votex genuine accessories may differ in fitting requirements, torque specifications and so on.*
>
> *Always follow the respective fitting and operating instructions.*

The wheel and tyre combinations or changes listed in the vehicle tables refer exclusively to Volkswagen Genuine wheels. Approval of wheel and tyre combinations or a change to wheels from the accessories trade is not possible with the parts certificate attached here.

> ⚠ **WARNING**
>
> *The fitting instructions and torque specifications for wheels from Votex genuine accessories may differ from those intended for wheels from Volkswagen genuine parts.*
>
> *Therefore, always observe the torque settings for the wheel bolts as well as the respective fitting and operating instructions.*

24.1 Polo GTI, type 9N model year 2006 to model year 2009

Appendix for parts certificate 3879/08

The parts certificate can be found on the Volkswagen ServiceNet under Technology; Guides; Wheels and Tyres Guide.

Type Approval No.: e1*2001/116*0174*14 to e1*2001/116*0174*25

Overview

Model engine output	Tyres	Tyre size	Wheel rim	Off-set in mm	Snow chains	Remarks
1.8l 110 kW petrol engine	Standard tyres	205/45 R 16 83V/W	$6^1/_2$ J x 16 ⇒ page 150	38	No	General information on: ◆ Winter tyres ⇒ page 15 ◆ Snow chains ⇒ page 18
		205/45 R 16 83V/W	$6^1/_2$ J x 16 ⇒ page 150	43	No	Tyre makes recommended by Volkswagen:

Protected by copyright. Copying for private or commercial purposes, in part or in whole, is not permitted unless authorised by Volkswagen AG. Volkswagen AG does not guarantee or accept any liability with respect to the correctness of information in this document. Copyright by Volkswagen AG.

satelettronica

Model engine output	Tyres	Tyre size	Wheel rim	Off-set in mm	Snow chains	Remarks
	Modification	195/55 R 15 85V	6 J x 15 ⇒ page 149	43	No	◆ Summer tyres ⇒ page 641 ◆ Winter tyres ⇒ page 679
		205/40 R17 84W * ⇒ page 149	7 J x 17 ⇒ page 152	38	No	
		205/40 R17 84W * ⇒ page 149	7 1/2 J x 17 ⇒ page 153	38	No	* Vehicles with 4 doors: curtain and side airbags may not be installed or must be deactivated.
	Winter tyres	185/55 R 15 82Q	6 J x 15 ⇒ page 149	43	Yes	

Tyre inflation pressures are located on a sticker in the fuel tank flap or in ⇒ Maintenance ; Booklet ; Check tyres: condition, profile, inflation pressure, depth of tread .

24.2 Wheel allocation for Polo GTI, type 9N model year 2006 to model year 2009

Explanation of information on wheels ⇒ page 59

Torque specifications for wheel bolts ⇒ Running gear, axles, steering; Rep. gr. 44 ; Fitting wheels and tyres; Fitting wheels

Pitch circle diameter:	100 mm
Number of wheel bolt holes:	5

24.2.1 6 J x 15

Caution

Observe the allocation of wheels and tyres to the respective engines, which are listed in the overview table ⇒ page 148 .

6Q0 601 027 G, 6Q0 601 027 Q - Wheel and tyre combination ⇒ page 149

Size:	6 J x 15
Wheel offset in mm:	43
Wheel load in kg:	500

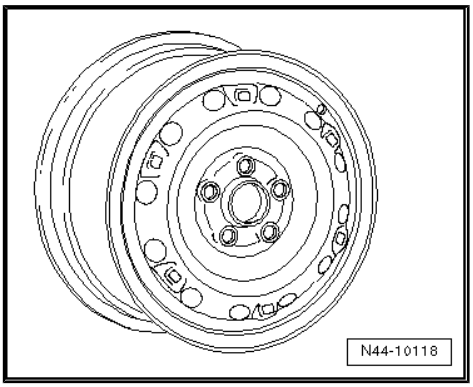

Protected by copyright. Copyright by Volkswagen AG. Volkswagen AG does not guarantee or accept any liability with respect to the correctness of information in this document. Copyright by Volkswagen AG. Protected by copyright. Copying for private or commercial purposes, in part or in whole, is not permitted unless authorised by Volkswagen AG.

satelettronica

Protected by copyright. Copying for private or commercial purposes, in part or in whole, is not permitted unless authorised by Volkswagen AG. Volkswagen AG does not guarantee or accept any liability with respect to the correctness of information in this document. Copyright by Volkswagen AG.

6Q0 601 025 L - Wheel and tyre combination ⇒ page 149

Size:	6 J x 15
Wheel offset in mm:	43
Wheel load in kg:	475

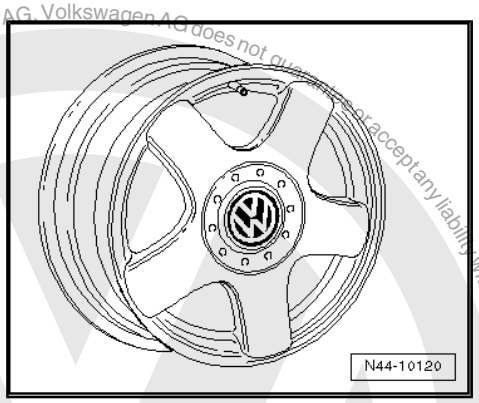

6Q0 601 025 R - Wheel and tyre combination ⇒ page 149

Size:	6 J x 15
Wheel offset in mm:	43
Wheel load in kg:	480

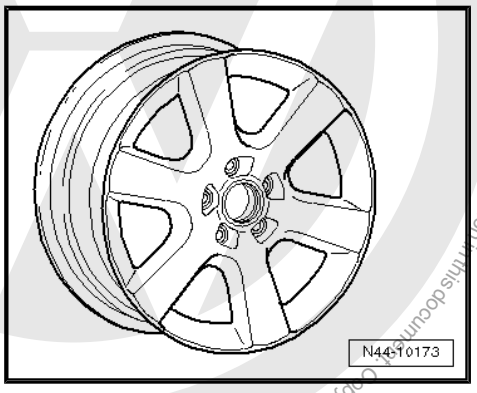

24.2.2 6 1/2 J x 16 offset 38

Caution

Observe the allocation of wheels and tyres to the respective engines, which are listed in the overview table ⇒ page 148 *.*

205/45 R 16 83V/W tyres on 6 1/2 J x 16 rims with an offset of of 38 are only possible in combination with widened wheel housings (FLAPS)!

6Q0 601 025 AD - Wheel and tyre combination ⇒ page 148

Size:	6 1/2 J x 16
Wheel offset in mm:	38
Wheel load in kg:	480

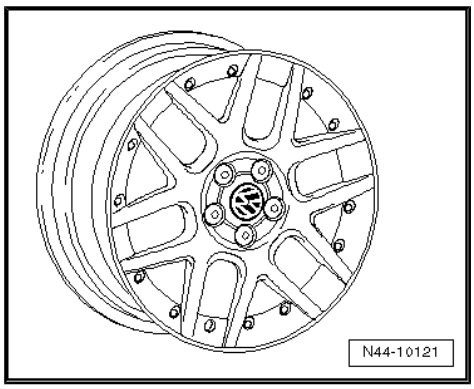

24.2.3 6 1/2 J x 16 offset 43

Caution

Observe the allocation of wheels and tyres to the respective engines, which are listed in the overview table ⇒ page 148 *.*

satelettronica

6Q0 601 025 D - Wheel and tyre combination ⇒ page 148

Size:	$6^1/_2$ J x 16
Wheel offset in mm:	43
Wheel load in kg:	475

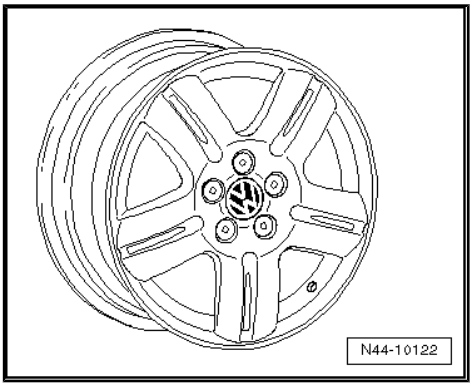

6Q0 601 025 S - Wheel and tyre combination ⇒ page 148

Size:	$6^1/_2$ J x 16
Wheel offset in mm:	43
Wheel load in kg:	480

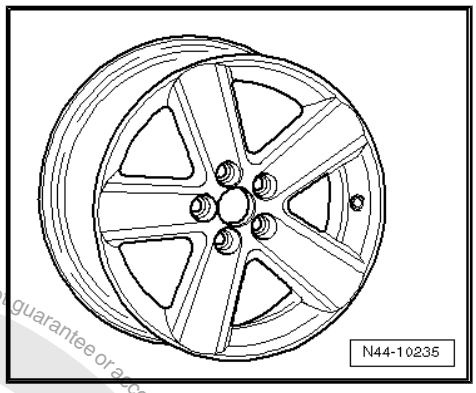

6Q0 601 025 T - Wheel and tyre combination ⇒ page 148

Size:	$6^1/_2$ J x 16
Wheel offset in mm:	43
Wheel load in kg:	480

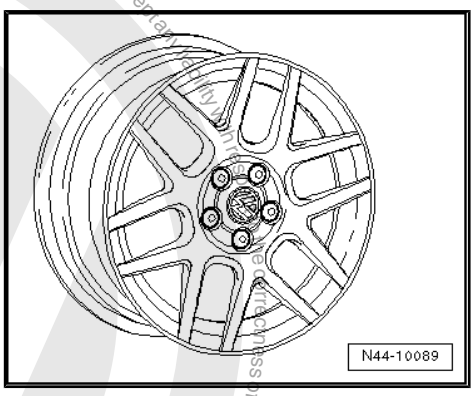

6Q0 601 025 AA - Wheel and tyre combination ⇒ page 148

Size:	$6^1/_2$ J x 16
Wheel offset in mm:	43
Wheel load in kg:	480

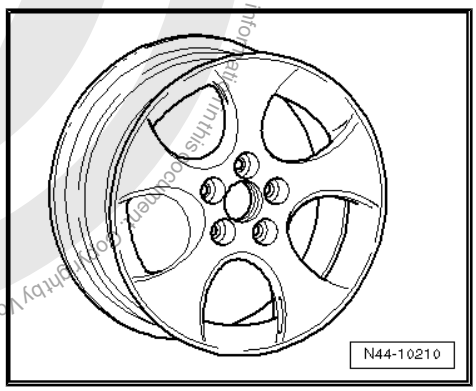

Protected by copyright. Copying for private or commercial purposes, in part or in whole, is not permitted unless authorised by Volkswagen AG. Volkswagen AG does not guarantee or accept any liability with respect to the accuracy, completeness or timeliness of the information in this document. Copyright by Volkswagen AG.
satelettronica

6Q0 601 025 C - Wheel and tyre combination ⇒ page 148

Size:	$6^1/_2$ J x 16
Wheel offset in mm:	43
Wheel load in kg:	480

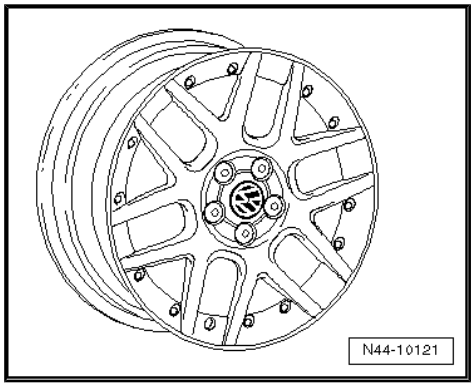

24.2.4 7 J x 17 offset 38

Caution

Observe the allocation of wheels and tyres to the respective engines, which are listed in the overview table *⇒ page 148* *.*

WARNING

- *Vehicles with 4 doors: curtain and side airbags may not be installed or must be deactivated.*
- *205/40 R 17 84W tyres on 7 J x 17 rims with an offset of of 38 are only possible in combination with widened wheel housings (FLAPS)!*

1J0 601 025 S - Wheel and tyre combination ⇒ page 149

Size:	7 J x 17
Wheel offset in mm:	38
Wheel load in kg:	580

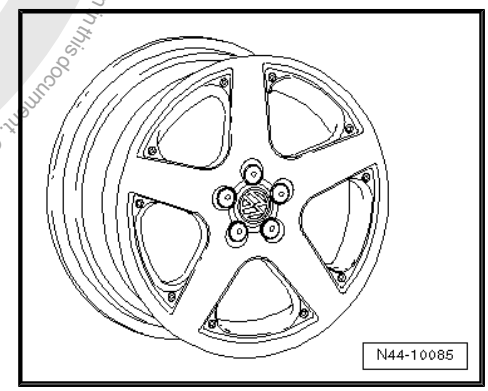

1J0 601 025 AB - Wheel and tyre combination ⇒ page 149

Size:	7 J x 17
Wheel offset in mm:	38
Wheel load in kg:	550

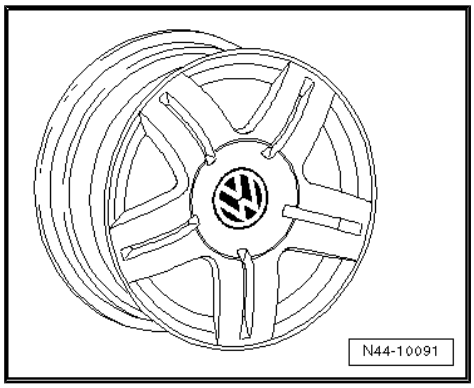

Protected by copyright. Copying for private or commercial purposes, in whole or in part, is not permitted unless authorised by Volkswagen AG. Volkswagen AG does not guarantee or accept any liability with respect to the correctness of information in this document. Copyright by Volkswagen AG.
satelettronica

24.2.5 $7^1/_2$ J x 17 offset 38

Caution

Observe the allocation of wheels and tyres to the respective engines, which are listed in the overview table *⇒ page 148* *.*

WARNING

- *Vehicles with 4 doors: curtain and side airbags may not be installed or must be deactivated.*
- *205/40 R 17 84W tyres on $7^1/_2$ J x 17 rims with an offset of of 38 are only possible in combination with widened wheel housings (FLAPS)!*

1J0 601 025 BC - Wheel and tyre combination ⇒ page 149

Size:	$7^1/_2$ J x 17
Wheel offset in mm:	38
Wheel load in kg:	550

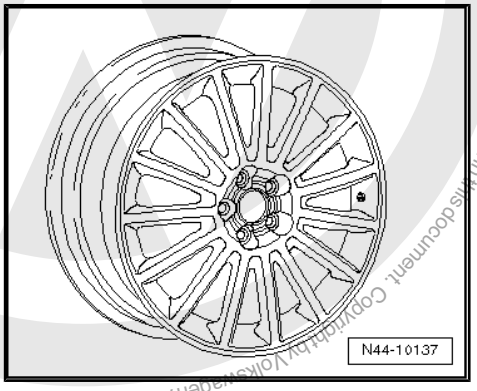

Protected by copyright. Copying for private or commercial purposes, in part or in whole, is not permitted unless authorised by Volkswagen AG. Volkswagen AG does not guarantee or accept any liability with respect to the correctness of information in this document. Copyright by Volkswagen AG.
satelettronica

25 Polo GTI Cup Edition from model year 2007

General

Volkswagen vehicles are built according to the latest findings in safety engineering. To keep it that way, we recommend the use of only genuine Volkswagen spare parts. You can recognise this by the VW Audi logo and by the part number. It has been established that these parts are reliable, safe and suitable.

Despite constant appraisal of the market, we cannot assess other products on these points, even when in isolated cases they have been passed by official inspectors or have been granted official approval. Therefore, we cannot, of course, assume any liability if these products are installed.

WARNING

The products from Volkswagen genuine parts and Votex genuine accessories may differ in fitting requirements, torque specifications and so on.

Always follow the respective fitting and operating instructions.

The wheel and tyre combinations or changes listed in the vehicle tables refer exclusively to Volkswagen Genuine wheels. Approval of wheel and tyre combinations or a change to wheels from the accessories trade is not possible with the parts certificate attached here.

WARNING

The fitting instructions and torque specifications for wheels from Votex genuine accessories may differ from those intended for wheels from Volkswagen genuine parts.

Therefore, always observe the torque settings for the wheel bolts as well as the respective fitting and operating instructions.

25.1 Polo GTI Cup Edition, type 9N model year 2007 to model year 2009

Appendix for parts certificate 3879/08

The parts certificate can be found on the Volkswagen ServiceNet under Technology; Guides; Wheels and Tyres Guide.

Type Approval No.: e1*2001/116*0174*18 to e1*2001/116*0174*25

Overview

Model engine output	Tyres	Tyre size	Wheel rim	Off-set in mm	Snow chains	Remarks
1.8l 132 kW petrol engine	Standard tyres	205/40 R 17 84W * ⇒ page 155	$7^1/_2$ J x 17 ⇒ page 158	38	No	General information on: ◆ Winter tyres ⇒ page 15 ◆ Snow chains ⇒ page 18

Protected by copyright. Copyright by Volkswagen AG. Volkswagen AG does not guarantee or accept any liability with respect to the correctness of information in this document. Copyright by Volkswagen AG. Protected by copyright. Copying for private or commercial purposes, in whole or in part, is not permitted unless authorised by Volkswagen AG.

satelettronica

Model engine output	Tyres	Tyre size	Wheel rim	Off-set in mm	Snow chains	Remarks
	Modification	205/45 R 16 83W	$6^1/_2$ J x 16 ⇒ page 156	43	No	Tyre makes recommended by Volkswagen: ◆ Summer tyres ⇒ page 641 ◆ Winter tyres ⇒ page 679
		205/40 R17 84W * ⇒ page 155	7 J x 17 ⇒ page 157	38	No	* Vehicles with 4 doors: curtain and side airbags may not be installed or must be deactivated.
	Winter tyres	205/45 R 16 83Q/T/H	$6^1/_2$ J x 16 ⇒ page 155	42	Yes	
		205/45 R 16 83Q/T/H	$6^1/_2$ J x 16 ⇒ page 156	43	No	

Tyre inflation pressures are located on a sticker in the fuel tank flap or in ⇒ Maintenance ; Booklet ; Check tyres: condition, profile, inflation pressure, depth of tread .

25.2 Wheel allocation for Polo GTI Cup Edition, type 9N model year 2007 to model year 2009

Explanation of information on wheels ⇒ page 59

Torque specifications for wheel bolts ⇒ Running gear, axles, steering; Rep. gr. 44 ; Fitting wheels and tyres; Fitting wheels

Pitch circle diameter:	100 mm
Number of wheel bolt holes:	5

25.2.1 $6^1/_2$ J x 16 offset 42

Caution

Observe the allocation of wheels and tyres to the respective engines, which are listed in the overview table ⇒ page 154 .

1J0 601 027 R, 1J0 601 027 AD - Wheel and tyre combination ⇒ page 155

Size:	$6^1/_2$ J x 16
Wheel offset in mm:	42
Wheel load in kg:	550

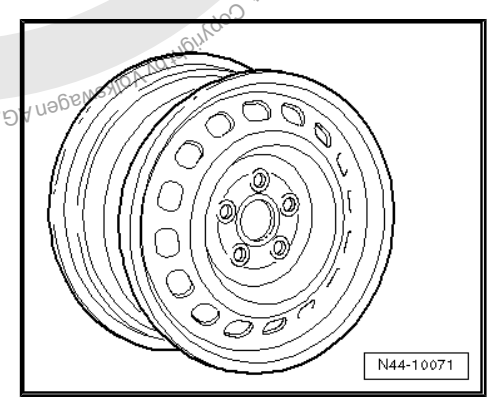

Volkswagen AG. Volkswagen AG does not guarantee or accept any liability with respect to the correctness of information in this document. Copyright by Volkswagen AG. Protected by copyright. Copying for private or commercial purposes, in part or in whole, is not permitted unless authorised by Volkswagen AG.
satelettronica

25.2.2 $6^1/_2$ J x 16 offset 43

> **Caution**
>
> *Observe the allocation of wheels and tyres to the respective engines, which are listed in the overview table* *⇒ page 154* *.*

6Q0 601 025 D - Wheel and tyre combination ⇒ page 155

Size:	$6^1/_2$ J x 16
Wheel offset in mm:	43
Wheel load in kg:	475

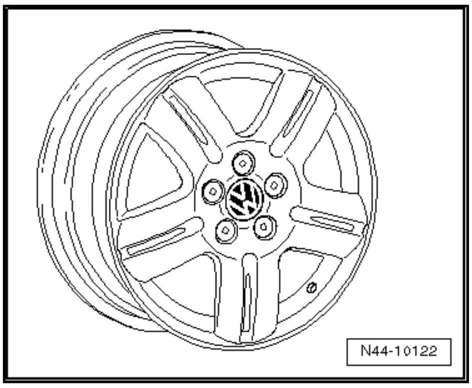

6Q0 601 025 S - Wheel and tyre combination ⇒ page 155

Size:	$6^1/_2$ J x 16
Wheel offset in mm:	43
Wheel load in kg:	480

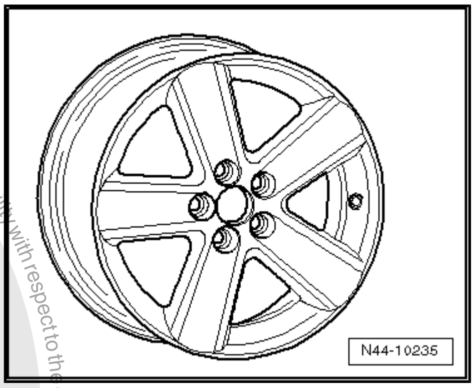

6Q0 601 025 T - Wheel and tyre combination ⇒ page 155

Size:	$6^1/_2$ J x 16
Wheel offset in mm:	43
Wheel load in kg:	480

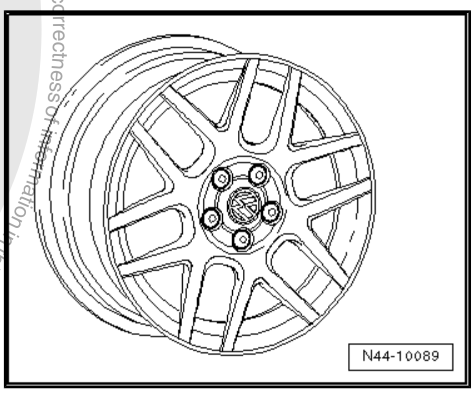

6Q0 601 025 AA - Wheel and tyre combination ⇒ page 155

Size:	$6^1/_2$ J x 16
Wheel offset in mm:	43
Wheel load in kg:	480

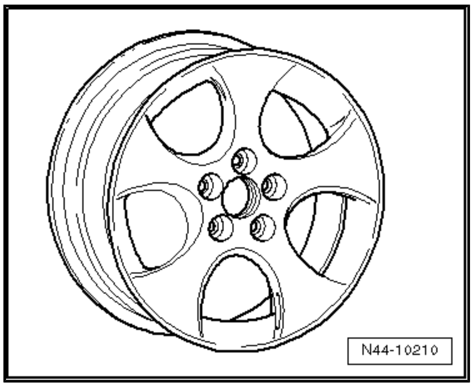

Protected by copyright. Copying for private or commercial purposes, in part or in whole, is not permitted unless authorised by Volkswagen AG. Volkswagen AG does not guarantee or accept any liability with respect to the correctness of information in this document. Copyright by Volkswagen AG.
sateletronica

6Q0 601 025 C - Wheel and tyre combination ⇒ page 155

Size:	6 1/2 J x 16
Wheel offset in mm:	43
Wheel load in kg:	480

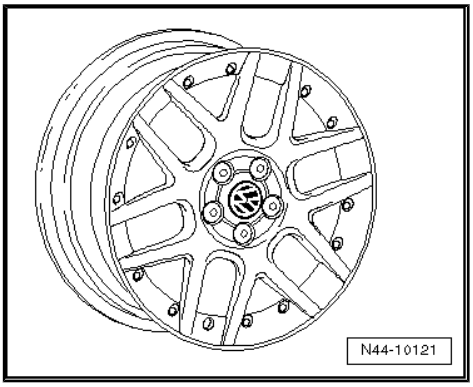

25.2.3 7 J x 17 offset 38

Caution

Observe the allocation of wheels and tyres to the respective engines, which are listed in the overview table *⇒ page 154* *.*

WARNING

- *Vehicles with 4 doors: curtain and side airbags may not be installed or must be deactivated.*
- *205/40 R 17 84W tyres on 7 J x 17 rims with an offset of of 38 are only possible in combination with widened wheel housings (FLAPS)!*

1J0 601 025 S - Wheel and tyre combination ⇒ page 155

Size:	7 J x 17
Wheel offset in mm:	38
Wheel load in kg:	580

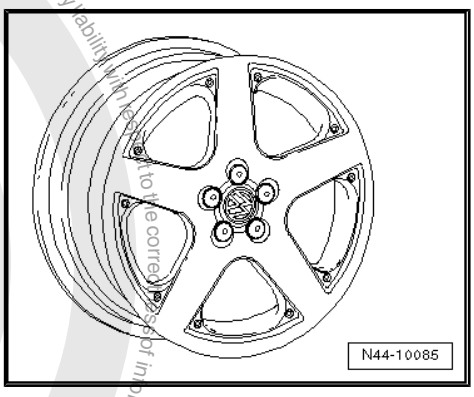

1J0 601 025 AB - Wheel and tyre combination ⇒ page 155

Size:	7 J x 17
Wheel offset in mm:	38
Wheel load in kg:	550

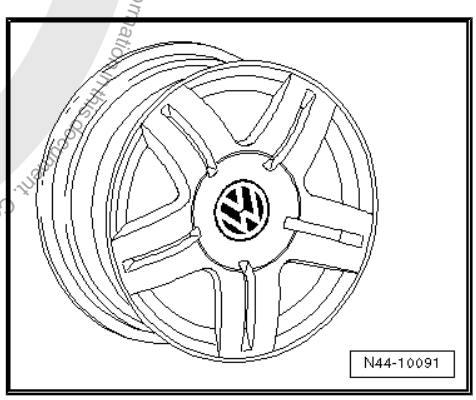

Protected by copyright. Copyright by Volkswagen AG.
Volkswagen AG does not guarantee or accept any liability with regard to the correctness of information in this document. Copyright by Volkswagen AG.
Copyright by Volkswagen AG. Reproduction, in part or in whole, is not permitted unless for commercial purposes.
satelettronica

Protected by copyright. Copyright by Volkswagen AG. Volkswagen AG does not guarantee or accept any liability with respect to the correctness of information in this document. Copying for private or commercial purposes, in part or in whole, is not permitted unless authorised by Volkswagen AG.

25.2.4 7 1/2 J x 17 offset 38

Caution

Observe the allocation of wheels and tyres to the respective engines, which are listed in the overview table ⇒ page 154 .

WARNING

- *Vehicles with 4 doors: curtain and side airbags may not be installed or must be deactivated.*
- *205/40 R 17 84W tyres on 7 1/2 J x 17 rims with an offset of of 38 are only possible in combination with widened wheel housings (FLAPS)!*

1J0 601 025 BC - Wheel and tyre combination ⇒ page 154

Size:	7 1/2 J x 17
Wheel offset in mm:	38
Wheel load in kg:	550

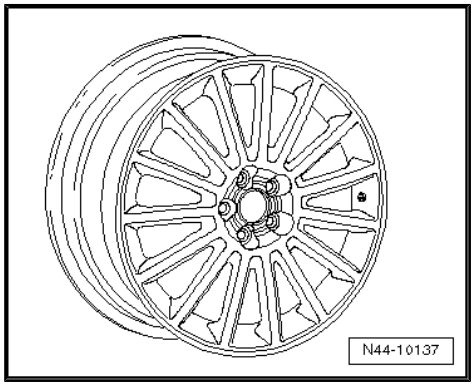

satelettronica

26 Polo saloon/sedan model year 2004 to model year 2005

General

Volkswagen vehicles are built according to the latest findings in safety engineering. To keep it that way, we recommend the use of only genuine Volkswagen spare parts. You can recognise this by the VW Audi logo and by the part number. It has been established that these parts are reliable, safe and suitable.

Despite constant appraisal of the market, we cannot assess other products on these points, even when in isolated cases they have been passed by official inspectors or have been granted official approval. Therefore, we cannot, of course, assume any liability if these products are installed.

> ⚠ **WARNING**
>
> *The products from Volkswagen genuine parts and Votex genuine accessories may differ in fitting requirements, torque specifications and so on.*
>
> *Always follow the respective fitting and operating instructions.*

The wheel and tyre combinations or changes listed in the vehicle tables refer exclusively to Volkswagen Genuine wheels. Approval of wheel and tyre combinations or a change to wheels from the accessories trade is not possible with the parts certificate attached here.

> ⚠ **WARNING**
>
> *The fitting instructions and torque specifications for wheels from Votex genuine accessories may differ from those intended for wheels from Volkswagen genuine parts.*
>
> *Therefore, always observe the torque settings for the wheel bolts as well as the respective fitting and operating instructions.*

26.1 Polo saloon/sedan, type 9N model year 2004 to model year 2005

Appendix for parts certificate 1900/05

Type Approval No.: e1*2001/116*0174*06 to e1*2001/116*0174*11

Overview

Model engine output	Tyres	Tyre size	Wheel rim	Off-set in mm	Snow chains	Remarks
1.4l 55 kW petrol engine	Standard tyres	165/70 R 14 81T	5 J x 14 ⇒ page 161	35	Yes	
	Modification	185/60 R 14 82T/H	6 J x 14 ⇒ page 161	43	Yes	
		185/55 R 15 82T/H	6 J x 15 ⇒ page 163	43	Yes	
		195/50 R 15 82H	6 J x 15 ⇒ page 163	43	No	

Protected by copyright. Copying for private or commercial purposes, in part or in whole, is not permitted unless authorised by Volkswagen AG. Volkswagen AG does not guarantee or accept any liability with respect to the correctness of information in this document. Copyright by Volkswagen AG.
satelettronica

Model engine output	Tyres	Tyre size	Wheel rim	Off-set in mm	Snow chains	Remarks
		195/55 R 15 85H/V	6 J x 15 ⇒ page 163	43	No	
		205/45 R 16 83V/W	6 1/2 J x 16 ⇒ page 164	43	No	General information on: ◆ Winter tyres ⇒ page 15 ◆ Snow chains ⇒ page 18
	Winter tyres	165/70 R 14 81Q	5 J x 14 ⇒ page 161	35	Yes	Tyre makes recommended by Volkswagen: ◆ Summer tyres ⇒ page 638 ◆ All-season tyres ⇒ page 668 ◆ Winter tyres ⇒ page 679
1.4l 55 kW 1.9l 47 kW diesel engines	Standard tyres	195/55 R15 85V	6 J x 15 ⇒ page 163	43	No	
	Modification	185/60 R 14 82T/H	6 J x 14 ⇒ page 161	43	Yes	
		185/55 R 15 82T/H	6 J x 15 ⇒ page 163	43	Yes	
		195/50 R 15 82H	6 J x 15 ⇒ page 163	43	No	
		195/55 R 15 85H/V	6 J x 15 ⇒ page 163	43	No	
		205/45 R 16 83V/W	6 1/2 J x 16 ⇒ page 164	43	No	
	Winter tyres	185/60 R 14 82Q	6 J x 14 ⇒ page 161	43	Yes	
		185/55 R 15 82T/H	6 J x 15 ⇒ page 163	43	Yes	
1.4l 74 kW petrol engine	Standard tyres	185/60 R 14 82H	6 J x 14 ⇒ page 161	43	Yes	
	Modification	185/55 R 15 82H	6 J x 15 ⇒ page 163	43	Yes	
		195/50 R 15 82H/V	6 J x 15 ⇒ page 163	43	No	
		195/55 R 15 85H/V	6 J x 15 ⇒ page 163	43	No	
		205/45 R 16 83V/W	6 1/2 J x 16 ⇒ page 164	43	No	

Protected by copyright. Copying for private or commercial purposes, in part or in whole, is not permitted unless authorised by Volkswagen AG. Volkswagen AG does not guarantee or assume any liability with respect to the correctness of information in this document. Copyright by Volkswagen AG.

satelettronica

Model engine output	Tyres	Tyre size	Wheel rim	Offset in mm	Snow chains	Remarks
	Winter tyres	185/60 R 14 82Q	6 J x 14 ⇒ page 161	43	Yes	
		185/55 R 15 82T/H	6 J x 15 ⇒ page 163	43	Yes	

Tyre pressures can be found on the inside of the fuel tank flap or in ⇒ Maintenance ; Booklet 15.1

26.2 Wheel allocation for Polo saloon/sedan, type 9N model year 2004 to model year 2005

Explanation of information on wheels ⇒ page 59

Torque specifications for wheel bolts ⇒ Running gear, axles, steering; Rep. gr. 44 ; Fitting wheels and tyres; Fitting wheels

Pitch circle diameter:	100 mm
Number of wheel bolt holes:	5

26.2.1 5 J x 14

Caution

Observe the allocation of wheels and tyres to the respective engines, which are listed in the overview table ⇒ page 159 .

6Q0 601 027 H - Wheel and tyre combination ⇒ page 159

Factory equipment only; not available as replacement part

Size:	5 J x 14
Wheel offset in mm:	35
Wheel load in kg:	465

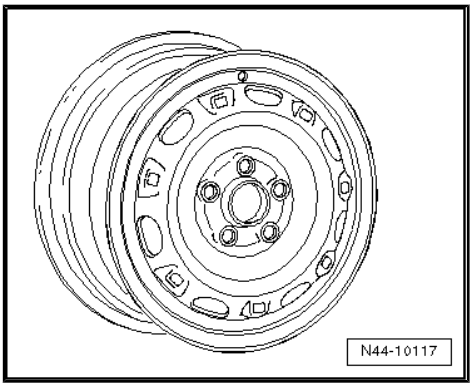

26.2.2 6 J x 14

Caution

Observe the allocation of wheels and tyres to the respective engines, which are listed in the overview table ⇒ page 159 .

Protected by copyright. Copying for private or commercial purposes, in part or in whole, is not permitted unless authorised by Volkswagen AG. Volkswagen AG does not guarantee or accept any liability with respect to the correctness of information in this document. Copyright by Volkswagen AG.
satelettronica

Factory equipment only; not available as replacement part

6Q0 601 027 A - Wheel and tyre combination ⇒ page 159

Size:	6 J x 14
Wheel offset in mm:	43
Wheel load in kg:	450

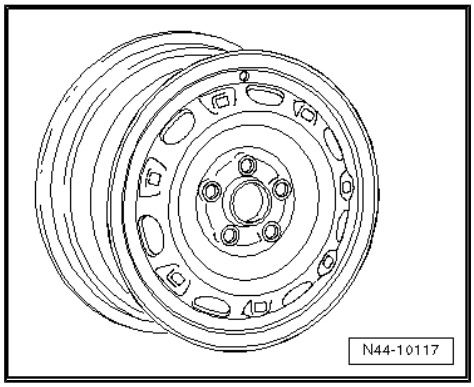

6Q0 601 027 F - Wheel and tyre combination ⇒ page 159

Size:	6 J x 14
Wheel offset in mm:	43
Wheel load in kg:	465

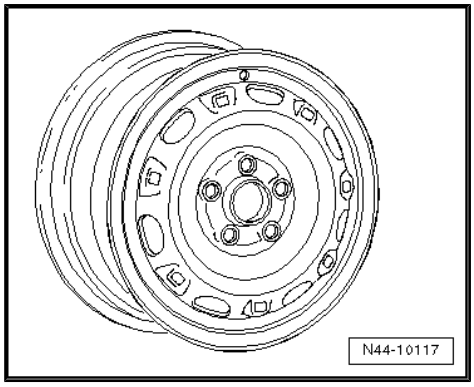

Not factory equipment, but available as replacement parts

6Q0 601 025 Q - Wheel and tyre combination ⇒ page 159

Not factory equipment, but available as replacement part

Size:	6 J x 14
Wheel offset in mm:	43
Wheel load in kg:	465

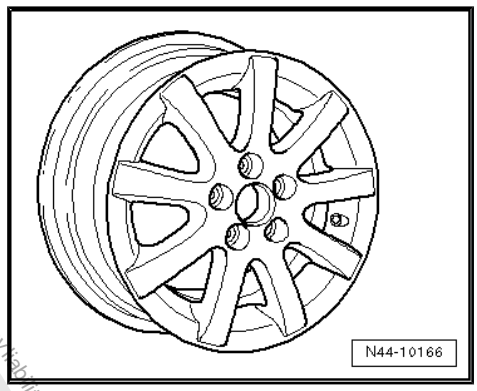

6Q0 601 025 K - Wheel and tyre combination ⇒ page 159

Not factory equipment, but available as replacement part

Size:	6 J x 14
Wheel offset in mm:	43
Wheel load in kg:	465

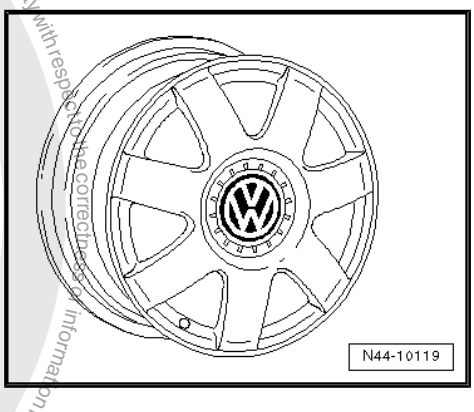

Protected by copyright. Copying for private or commercial purposes, in any form, is not permitted unless authorised by Volkswagen AG. Volkswagen AG does not guarantee or accept any liability with respect to the correctness of information in this document. Copyright by Volkswagen AG.

satelettronica

26.2.3 6 J x 15

Caution

Observe the allocation of wheels and tyres to the respective engines, which are listed in the overview table ⇒ page 159 *.*

Factory equipment only; not available as replacement part

6QE 601 025 - Wheel and tyre combination ⇒ page 160

Size:	6 J x 15
Wheel offset in mm:	43
Wheel load in kg:	475

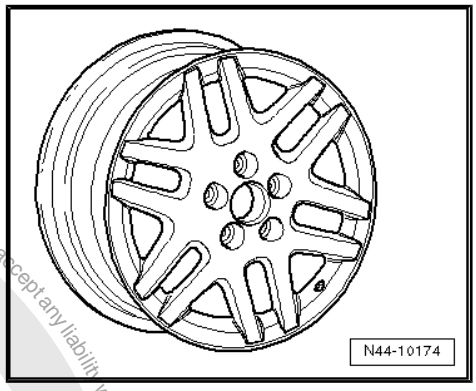

6Q0 601 027 G - Wheel and tyre combination ⇒ page 159

Size:	6 J x 15
Wheel offset in mm:	43
Wheel load in kg:	500

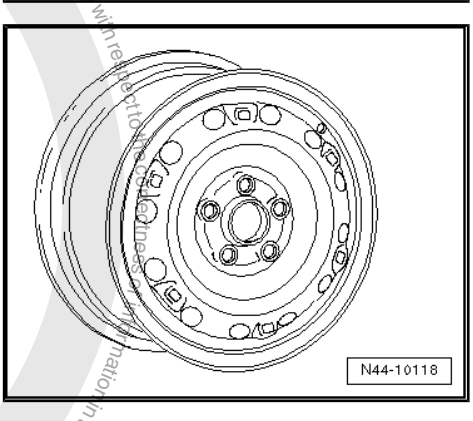

6Q0 601 025 L - Wheel and tyre combination ⇒ page 159

Not factory equipment, but available as replacement part

Size:	6 J x 15
Wheel offset in mm:	43
Wheel load in kg:	475

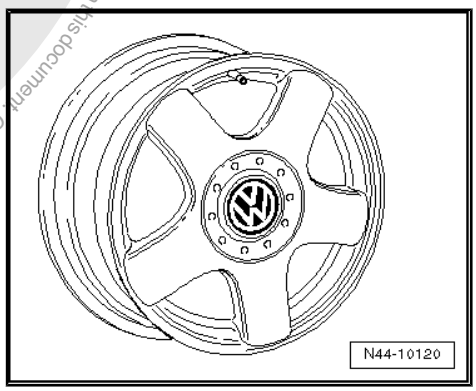

Protected by copyright. Copyright by Volkswagen AG. Volkswagen AG does not guarantee or accept any liability with respect to the correctness and completeness of information in this document. Copyright by Volkswagen AG. Protected by copyright. Copyright by Volkswagen AG. Reproduction in whole or in part is not permitted unless authorised by Volkswagen AG. Volkswagen AG does not guarantee or accept any liability with respect to the correctness and completeness of information in this document. Copyright by Volkswagen AG. Protected by copyright. Copyright by Volkswagen AG. Reproduction in whole or in part is not permitted unless authorised by Volkswagen AG. Volkswagen AG does not guarantee or accept any liability with respect to the correctness and completeness of information in this document. Copyright by Volkswagen AG.
satelettronica

Protected by copyright. Copying for private or commercial purposes, in part or in whole, is not permitted unless authorised by Volkswagen AG. Volkswagen AG does not guarantee or accept any liability with respect to the correctness of information in this document. Copyright by Volkswagen AG.

6Q0 601 025 R - Wheel and tyre combination ⇒ page 159

Not factory equipment, but available as replacement part

Size:	6 J x 15
Wheel offset in mm:	43
Wheel load in kg:	480

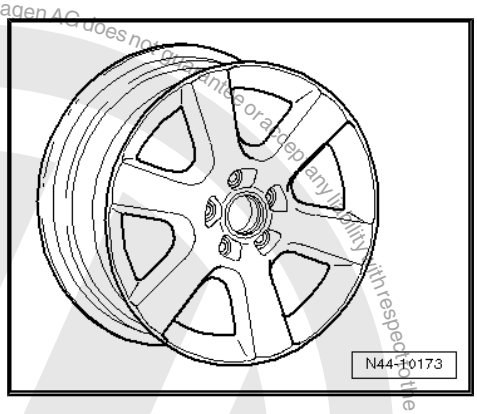

26.2.4 6$^1/_2$ J x 16

> **Caution**
>
> *Observe the allocation of wheels and tyres to the respective engines, which are listed in the overview table* ⇒ page 159 *.*

Not factory equipment, but available as replacement parts

6Q0 601 025 C - Wheel and tyre combination ⇒ page 160

Size:	6$^1/_2$ J x 16
Wheel offset in mm:	43
Wheel load in kg:	480

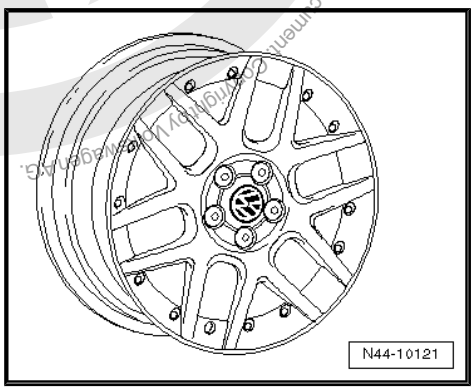

6Q0 601 025 D - Wheel and tyre combination ⇒ page 160

Size:	6$^1/_2$ J x 16
Wheel offset in mm:	43
Wheel load in kg:	475

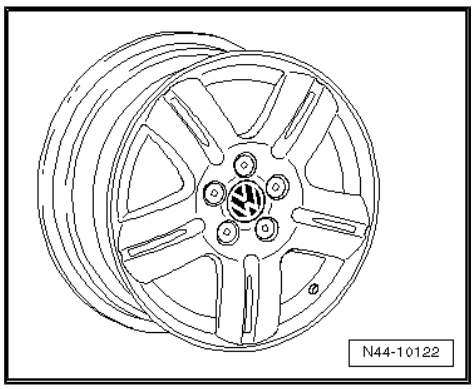

satelettronica

Protected by copyright. Copying for private or commercial purposes, in part or in whole, is not permitted unless authorised by Volkswagen AG. Volkswagen AG does not guarantee or accept any liability with respect to the correctness of information in this document. Copyright by Volkswagen AG.

6Q0 601 025 T - Wheel and tyre combination ⇒ page 160

Size:	$6^1/_2$ J x 16
Wheel offset in mm:	43
Wheel load in kg:	480

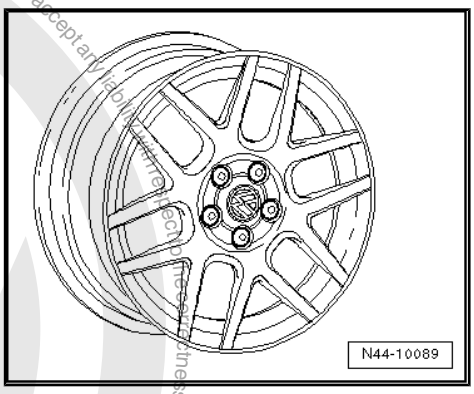

satelettronica

27 Golf model year 1992 to model year 1998

General

Volkswagen vehicles are built according to the latest findings in safety engineering. To keep it that way, we recommend the use of only genuine Volkswagen spare parts. You can recognise this by the VW Audi logo and by the part number. It has been established that these parts are reliable, safe and suitable.

Despite constant appraisal of the market, we cannot assess other products on these points, even when in isolated cases they have been passed by official inspectors or have been granted official approval. Therefore, we cannot, of course, assume any liability if these products are installed.

> ⚠ **WARNING**
>
> *The products from Volkswagen genuine parts and Votex genuine accessories may differ in fitting requirements, torque specifications and so on.*
>
> *Always follow the respective fitting and operating instructions.*

The wheel and tyre combinations or changes listed in the vehicle tables refer exclusively to Volkswagen Genuine wheels. Approval of wheel and tyre combinations or a change to wheels from the accessories trade is not possible with the parts certificate attached here.

> ⚠ **WARNING**
>
> *The fitting instructions and torque specifications for wheels from Votex genuine accessories may differ from those intended for wheels from Volkswagen genuine parts.*
>
> *Therefore, always observe the torque settings for the wheel bolts as well as the respective fitting and operating instructions.*

27.1 Golf type 1HX0, Golf Syncro 1HX1, Golf type 1H

Appendix 2 to Parts Certificate 1479/00

Golf, type 1HX0 from model year 1992 to model year 1997

General type approval No.: F 804

Golf, type 1HX1 from model year 1992 to model year 1997

General type approval No.: G 156

Golf, type 1H model year 1998

Type Approval No. e1*96/79*0068*00 to e1*96/79*0068*03

Overview

Model engine output	Tyres	Tyre size	Wheel rim	Offset in mm	Snow chains	Remarks
Golf 44 kW, 47 kW, 55 kW, 66 kW petrol engine;	Standard tyres	175/70 R 13 82T	$5^1/_2$ J x 13 ⇒ page 170	38	Yes	

Protected by copyright. Copying for private or commercial purposes, in whole or in part, is not permitted unless authorised by Volkswagen AG. Volkswagen AG does not guarantee or accept any liability with respect to the correctness of information in this document. Copyright by Volkswagen AG.
satelettronica

Model engine output	Tyres	Tyre size	Wheel rim	Offset in mm	Snow chains	Remarks
55 kW TD and GTD; Golf Eco-matic and 55 kW with automatic to 12.94	Modification	175/70 R 13 82S	$5^1/_2$ J x 13 ⇒ page 170	38	Yes	
		175/65 R 14 82S	6 J x 14 ⇒ page 171	43/45	Yes	
		185/60 R 14 82T	6 J x 14 ⇒ page 171	43/45	Yes	
		195/50 R 15 82H	6 J x 15 ⇒ page 173	45	Yes	
	Winter tyres	175/70 R 13 82Q	$5^1/_2$ J x 13 ⇒ page 170	38	Yes	
Golf 44 kW, 47 kW, 55 kW petrol engine; 55 kW TD and GTD from 05.96 with ABS	Standard tyres	185/60 R 14 82S	6 J x 14 ⇒ page 171	43/45	Yes	
	Modification	175/65 R 14 82S	6 J x 14 ⇒ page 171	43/45	Yes	175/70 R 13 82S/T are not permitted on vehicles from 05.96 with ABS and all vehicles with GT equipment!
		185/60 R 14 82T	6 J x 14 ⇒ page 171	43/45	Yes	
		195/50 R 15 82H	6 J x 15 ⇒ page 173	45	Yes	
	Winter tyres	175/65 R 14 82S	6 J x 14 ⇒ page 171	43/45	Yes	General information on: ◆ Winter tyres ⇒ page 15 ◆ Snow chains ⇒ page 18
Golf 66 kW CL, GL through 12.94	Standard tyres	175/70 R 13 82T	$5^1/_2$ J x 13 ⇒ page 170	38	Yes	Tyre makes recommended by Volkswagen: ◆ Summer tyres ⇒ page 641 ◆ All-season tyres ⇒ page 668 ◆ Winter tyres ⇒ page 680
	Modification	185/60 R 14 82T	6 J x 14 ⇒ page 171	43/45	Yes	
		195/50 R 15 82H	6 J x 15 ⇒ page 173	45	Yes	
	Winter tyres	175/70 R 13 82Q	$5^1/_2$ J x 13 ⇒ page 170	38	Yes	

satelettronica

Model engine output	Tyres	Tyre size	Wheel rim	Offset in mm	Snow chains	Remarks
Golf Syncro; 66 kW, 66 kW GT to 12.94	Standard tyres	185/60 R 14 82H	6 J x 14 ⇒ page 171	43/45	Yes	Syncro vehicles: Snow chains are permitted on the front wheels only.
	Modification	175/70 R 13 82T	5 1/2 J x 13 ⇒ page 170	38	Yes	
		185/60 R 14 82T	6 J x 14 ⇒ page 171	43/45	Yes	
		195/50 R 15 82H	6 J x 15 ⇒ page 173	45	Yes	
	Winter tyres	175/70 R 13 82Q	5 1/2 J x 13 ⇒ page 170	38	Yes	
Golf Syncro; 66 kW CL, GL from 01.95; 66 kW TDI	Standard tyres	185/60 R 14 82T	6 J x 14 ⇒ page 171	43/45	Yes	
	Modification	195/60 R 14 85H	6 J x 14 ⇒ page 171	43/45	Yes	
		195/50 R 15 82H	6 J x 15 ⇒ page 173	45	Yes	
	Winter tyres	175/65 R 14 82Q	6 J x 14 ⇒ page 171	43/45	Yes	
Golf 55 kW, 66 kW, 66 kW GT and Golf Ecomatic from 01.95	Standard tyres	185/60 R 14 82T	6 J x 14 ⇒ page 171	43/45	Yes	
	Modification	195/50 R 15 82H	6 J x 15 ⇒ page 173	45	Yes	
	Winter tyres	175/65 R 14 82Q	6 J x 14 ⇒ page 171	43/45	Yes	
all 74 kW; 85 kW CL, GL; 81 kW TDI CL, GL	Standard tyres	185/60 R 14 82H	6 J x 14 ⇒ page 171	43/45	Yes	
	Modification	195/50 R 15 82H	6 J x 15 ⇒ page 173	45	Yes	
	Winter tyres	175/65 R 14 82Q	6 J x 14 ⇒ page 171	43/45	Yes	
85 kW GTI; 81 kW TDI GTI	Standard tyres	195/50 R 15 82V	6 J x 15 ⇒ page 173	38	Yes	
	Modification	195/50 R 15 82H	6 J x 15 ⇒ page 173	38	Yes	
		195/50 R 15 82H	6 1/2 J x 15 ⇒ page 176	43	Yes	

Copyright by Volkswagen AG. Volkswagen AG does not guarantee or accept any liability with respect to the correctness of information in this document. Copyright by Volkswagen AG. Volkswagen AG, Volkswagen Aktiengesellschaft. Reproduction, in whole or in part, is not permitted unless authorised. Protected by copyright. Copying for private or commercial purposes, in part or in whole, is not permitted unless authorised.

satelettronica

Model engine out-put	Tyres	Tyre size	Wheel rim	Off-set in mm	Snow chains	Remarks
		205/50 R 15 82H	6 1/2 J x 15 ⇒ page 176	43	Yes	
		215/40 R 16 82V	7 J x 16 ⇒ page 179	43	No	
	Winter tyres	185/55 R 15 81T	6 J x 15 ⇒ page 173	38	Yes	Vehicles to 12.94
		185/55 R 15 81T	6 J x 15 ⇒ page 173	35	Yes	Vehicles from 01.95
110 kW GTI 16V	Standard tyres	205/50 R 15 86V	6 J x 15 ⇒ page 173	38	Yes	
	Modification	195/50 R 15 82V	6 J x 15 ⇒ page 173	38	Yes	
		195/50 R 15 82V	6 1/2 J x 15 ⇒ page 176	43	Yes	
		215/40 R 16 82V	7 J x 16 ⇒ page 179	43	No	
	Winter tyres	185/55 R 15 81T	6 J x 15 ⇒ page 173	38	Yes	Vehicles to 12.94
		185/55 R 15 81T	6 J x 15 ⇒ page 173	35	Yes	Vehicles from 01.95
128 kW VR6	Standard tyres	205/50 R 15 86V	6 1/2 J x 15 ⇒ page 176	43	Yes	
	Modification	215/40 R 16 86W reinforced	7 J x 16 ⇒ page 179	43	No	
	Winter tyres	185/55 R 15 81T reinforced	6 J x 15 ⇒ page 173	38	Yes	Vehicles to 12.94
		185/55 R 15 81T reinforced	6 J x 15 ⇒ page 173	35	Yes	Vehicles from 01.95
128 kW VR6 Syncro 140 kW	Standard tyres	205/50 R 15 86W	6 1/2 J x 15 ⇒ page 176	43	Yes	Syncro vehicles: Snow chains are only permissible on the front wheels!
	Modification	205/50 ZR 15 86W reinforced	6 1/2 J x 15 ⇒ page 176	43	Yes	
	Winter tyres	185/55 R 15 81T reinforced	6 J x 15 ⇒ page 173	35	Yes	

Tyre pressures can be found on the inside of the fuel tank flap or in ⇒ Maintenance ; Booklet 35

Protected by copyright. Copyright by Volkswagen AG. Volkswagen AG does not guarantee or accept any liability with respect to the correctness of information in this document. Copyright by Volkswagen AG. Volkswagen AG is not authorised by Volkswagen AG. Copying for private or commercial purposes, in part or in whole, is not permitted unless authorised by Volkswagen AG.

satelettronica

27.2 Wheel allocation for Golf type 1HX0, Golf Syncro 1HX1, Golf type 1H

Golf, type 1HX0 from model year 1992 to model year 1997

Golf Syncro, type 1HX1 from model year 1992 to model year 1997

Golf, type 1H model year 1998

Explanation of information on wheels ⇒ page 59

Torque specifications for wheel bolts ⇒ Running gear; Rep. gr. 40 ; Repairing front suspension (basic running gear); Removing and installing wheel bearing, strut, drive shaft (basic suspension) or ⇒ Running gear; Rep. gr. 40 ; Repairing front suspension (plus running gear); Removing and installing wheel bearing, strut (plus running gear)

Pitch circle diameter: 100 mm

27.2.1 5$^1/_2$ J x 13

Caution

Observe the allocation of wheels and tyres to the respective engines, which are listed in the overview table *⇒ page 166* *.*

Golf to 55 kW CL, GL with manual gearbox (front-wheel drive)

191 601 025 D - Wheel and tyre combination ⇒ page 166

Size:	5$^1/_2$ J x 13
Wheel offset in mm:	38
Wheel load in kg:	410
Number of wheel bolt holes:	4

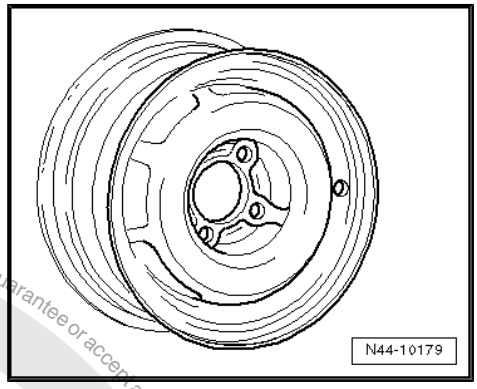

Golf to 66 kW CL, GL with petrol and diesel engines, Golf Syncro 66 kW to 12.94

1H0 601 025 A - Wheel and tyre combination ⇒ page 166

Size:	5$^1/_2$ J x 13
Wheel offset in mm:	38
Wheel load in kg:	450
Number of wheel bolt holes:	4

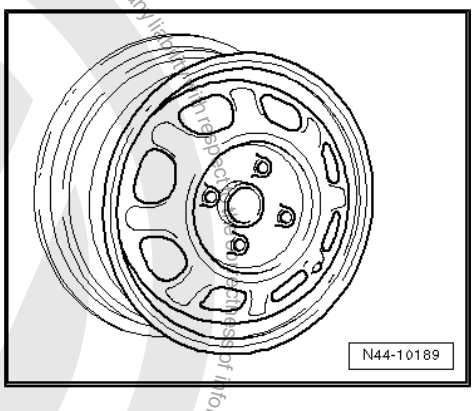

Protected by copyright. Copying for private or commercial purposes, in part or in whole is not permitted unless authorised by Volkswagen AG. Volkswagen AG does not guarantee or accept any liability with respect to the suitability of information in this document. Copyright by Volkswagen AG.
satelettronica

321 601 025 J/M - Wheel and tyre combination ⇒ page 166

Size:	5 1/2 J x 13
Wheel offset in mm:	38
Wheel load in kg:	460
Number of wheel bolt holes:	4

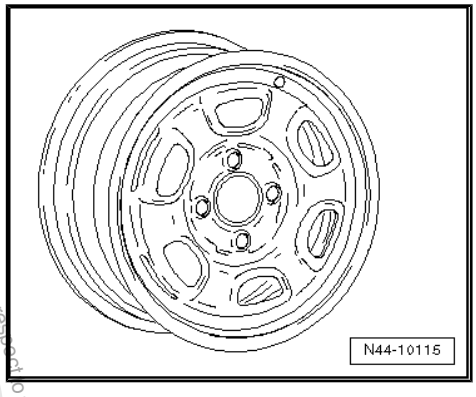

27.2.2 6 J x 14

Golf to 85 kW CL, GL, Golf 66 kW GT, Golf Syncro 66 kW

Caution

Observe the allocation of wheels and tyres to the respective engines, which are listed in the overview table *⇒ page 166* *.*

811 601 025 P - Wheel and tyre combination ⇒ page 168

Note

This rim is allowed only for vehicles with a maximum permitted axle load of 880 kg.

Size:	6 J x 14
Wheel offset in mm:	45
Wheel load in kg:	440
Number of wheel bolt holes:	4

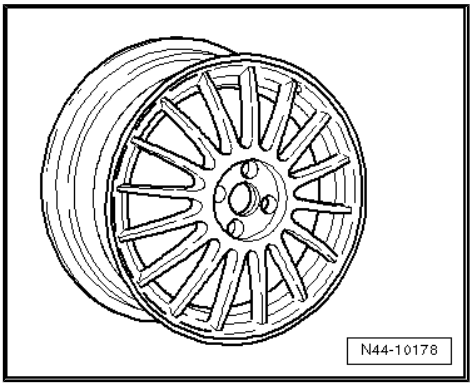

1H0 601 025 D - Wheel and tyre combination ⇒ page 168

Size:	6 J x 14
Wheel offset in mm:	45
Wheel load in kg:	450
Number of wheel bolt holes:	4

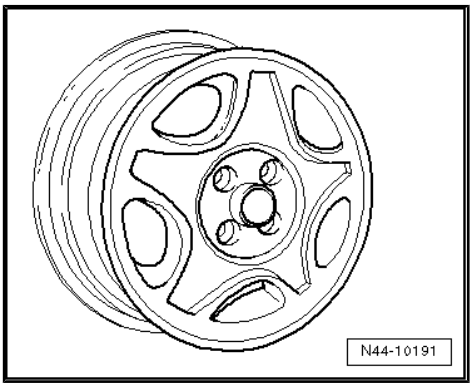

Protected by copyright. Copyright by Volkswagen AG.
Commercial purposes, in part or in whole, is not permitted unless authorised by Volkswagen AG. Volkswagen AG does not guarantee or accept any liability with respect to the correctness of information in this document.
satelettronica

1H0 601 027 - Wheel and tyre combination ⇒ page 168

Size:	6 J x 14
Wheel offset in mm:	45
Wheel load in kg:	500
Number of wheel bolt holes:	4

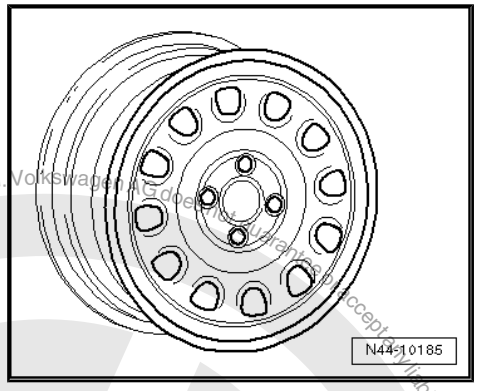

1H0 601 027 A - Wheel and tyre combination ⇒ page 168

Size:	6 J x 14
Wheel offset in mm:	43
Wheel load in kg:	500
Number of wheel bolt holes:	4

Golf to 85 kW, petrol and diesel engine CL, GL, Golf 66 kW GT, all Golf Syncro 66 kW

Not for “20 Years GTI” special models

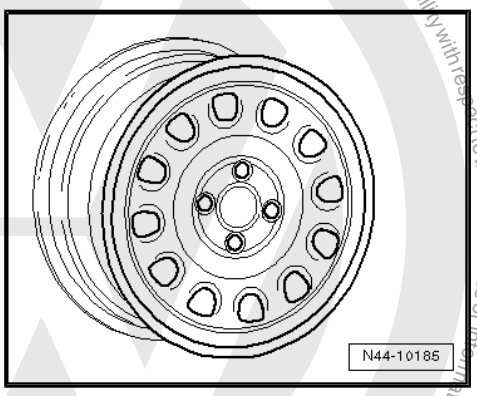

1H0 601 025 P - Wheel and tyre combination ⇒ page 167

Size:	6 J x 14
Wheel offset in mm:	45
Wheel load in kg:	460
Number of wheel bolt holes:	4

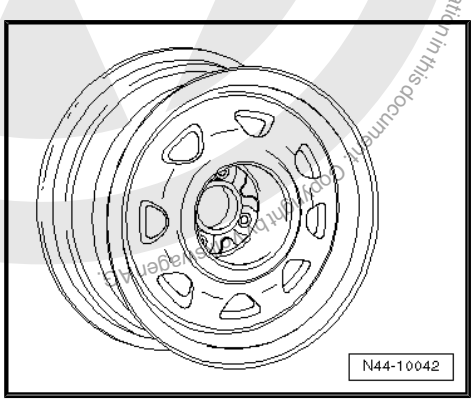

1HM 601 025 - Wheel and tyre combination ⇒ page 167

Size:	6 J x 14
Wheel offset in mm:	45
Wheel load in kg:	460
Number of wheel bolt holes:	4

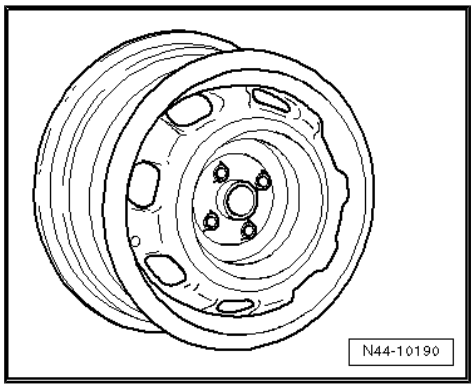

Protected by copyright. Copying for private or commercial purposes, in part or in whole, is not permitted unless authorised by Volkswagen AG. Volkswagen AG does not guarantee or accept any liability with respect to the correctness of information in this document. Copyright by Volkswagen AG.

satelettronica

1H0 601 025 B - Wheel and tyre combination ⇒ page 167

Size:	6 J x 14
Wheel offset in mm:	45
Wheel load in kg:	460
Number of wheel bolt holes:	4

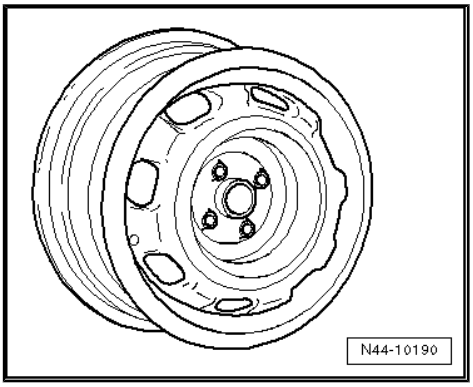

1H0 601 027 A - Wheel and tyre combination ⇒ page 167

Size:	6 J x 14
Wheel offset in mm:	43
Wheel load in kg:	500
Number of wheel bolt holes:	4

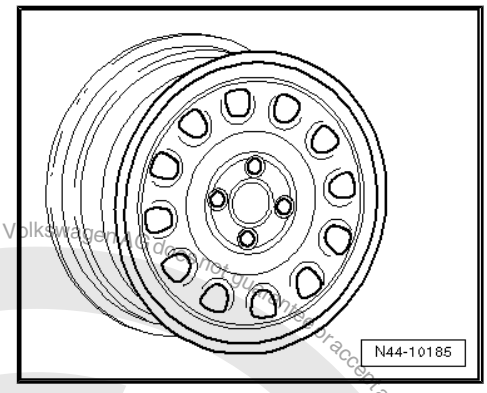

1H0 601 025 R - Wheel and tyre combination ⇒ page 167

Size:	6 J x 14
Wheel offset in mm:	45
Wheel load in kg:	500
Number of wheel bolt holes:	4

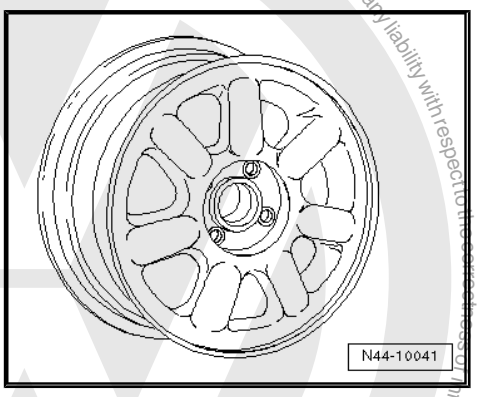

27.2.3 6 J x 15

Golf to 85 kW CL, GL, Golf 66 kW GT, Golf Syncro 66 kW

> **Caution**
>
> *Observe the allocation of wheels and tyres to the respective engines, which are listed in the overview table* *⇒ page 166* *.*

Protected by copyright. Copying for private or commercial purposes, in part or in whole, is not permitted unless authorised by Volkswagen AG. Volkswagen AG does not guarantee or accept any liability with respect to the correctness of information in this document. Copyright by Volkswagen AG.
satelettronica

1H0 601 025 E - Wheel and tyre combination ⇒ page 168

Size:	6 J x 15
Wheel offset in mm:	45
Wheel load in kg:	450
Number of wheel bolt holes:	4

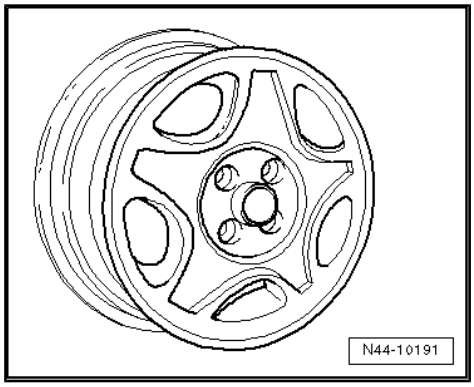

1H0 601 025 L - Wheel and tyre combination ⇒ page 168

Size:	6 J x 15
Wheel offset in mm:	45
Wheel load in kg:	450
Number of wheel bolt holes:	4

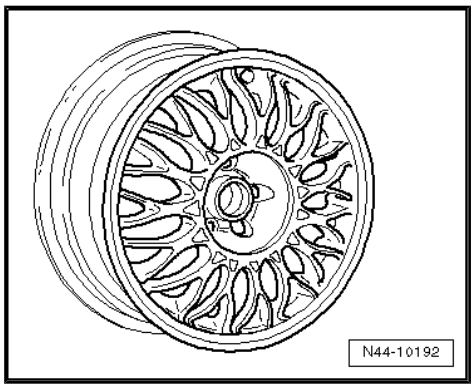

1H0 601 025 Q - Wheel and tyre combination ⇒ page 168

Size:	6 J x 15
Wheel offset in mm:	45
Wheel load in kg:	450
Number of wheel bolt holes:	4

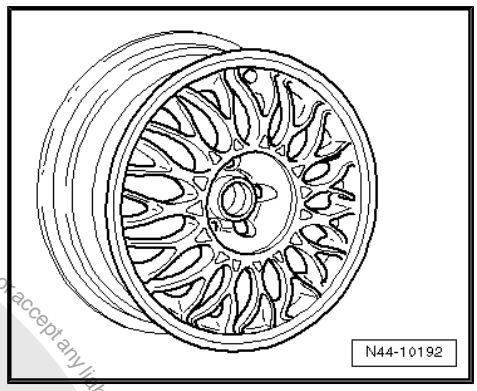

1H0 601 025 AD - Wheel and tyre combination ⇒ page 168

Size:	6 J x 15
Wheel offset in mm:	45
Wheel load in kg:	460
Number of wheel bolt holes:	4

Golf to 85 kW, petrol and diesel engine CL, GL, Golf 66 kW GT, all Golf Syncro 66 kW

Not for "20 Years GTI" special models

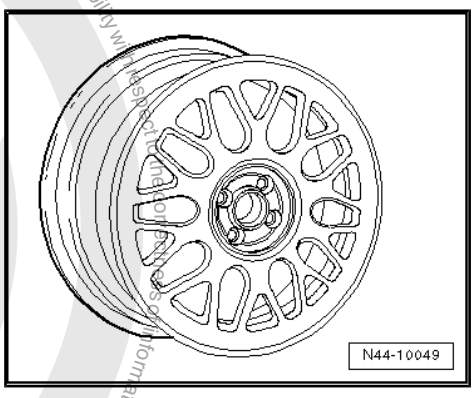

Protected by copyright. Copying for private or commercial purposes, in part or in whole, is not permitted unless authorised by Volkswagen AG. Volkswagen AG does not guarantee or accept any liability with respect to the accuracy of the information in this document. Copyright by Volkswagen AG.
satelettronica

1H0 601 025 AD - Wheel and tyre combination ⇒ page 167

Size:	6 J x 15
Wheel offset in mm:	45
Wheel load in kg:	460
Number of wheel bolt holes:	4

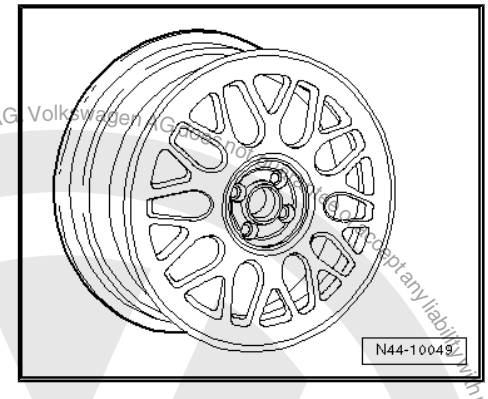

1H0 601 025 AE - Wheel and tyre combination ⇒ page 167

Size:	6 J x 15
Wheel offset in mm:	45
Wheel load in kg:	480
Number of wheel bolt holes:	4

Golf GTI 85 kW, Golf GTI 16V

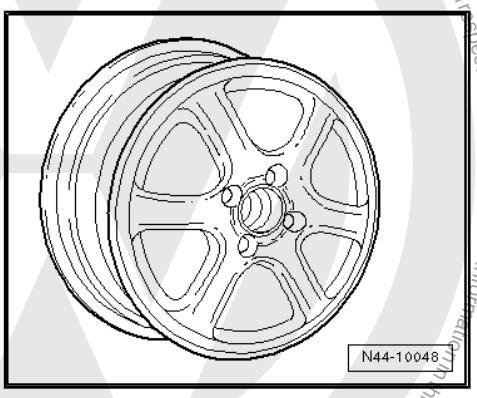

1H0 601 025 J - Wheel and tyre combination ⇒ page 168

Size:	6 J x 15
Wheel offset in mm:	38
Wheel load in kg:	530
Number of wheel bolt holes:	5

Golf GTI 85 kW, Golf GTI 16V Golf VR6 to 12.94, Golf VR6 Syncro to 12.94

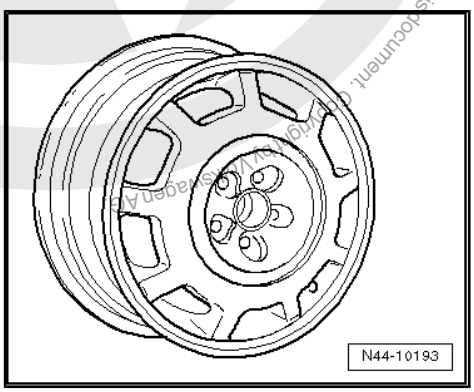

1H0 601 025 K - Wheel and tyre combination ⇒ page 168

Size:	6 J x 15
Wheel offset in mm:	38
Wheel load in kg:	490
Number of wheel bolt holes:	5

Golf GTI 85 kW, Golf GTI 16V, Golf VR6, Golf VR6 Syncro

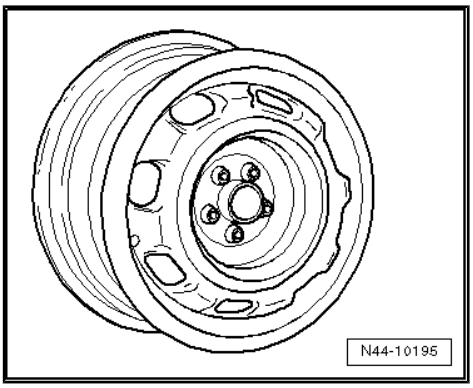

Caution

Observe the allocation of wheels and tyres to the respective engines, which are listed in the overview table *⇒ page 166* *.*

Protected by copyright. Copying for private or commercial purposes, in part or in whole, is not permitted unless authorised by Volkswagen AG. Volkswagen AG does not accept any liability with respect to the correctness of information in this document. Copyright by Volkswagen AG.
satelettronica

3A0 601 027 - Wheel and tyre combination ⇒ page 169

Possible for snow tyres.

Size:	6 J x 15
Wheel offset in mm:	35
Wheel load in kg:	530
Number of wheel bolt holes:	5

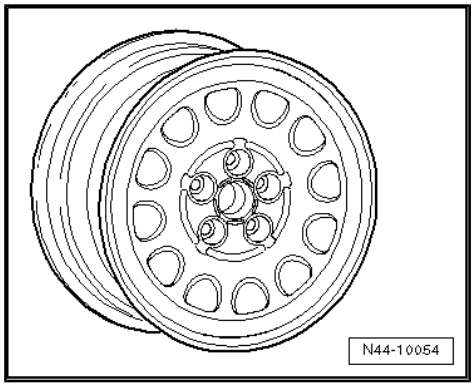

27.2.4 6$^1/_2$ J x 15

Golf GTI 85 kW, Golf GTI 16V Golf VR6 to 12.94, Golf VR6 Syncro to 12.94

1H0 601 025 F - Wheel and tyre combination ⇒ page 168

Size:	6$^1/_2$ J x 15
Wheel offset in mm:	43
Wheel load in kg:	490
Number of wheel bolt holes:	5

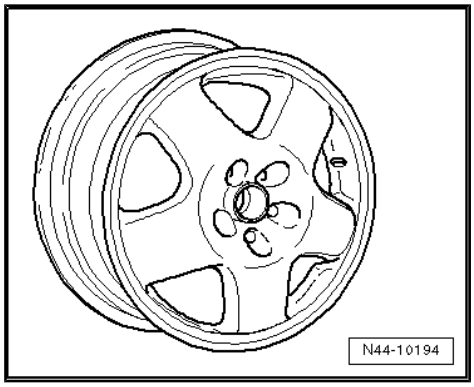

Golf GTI 85 kW, Golf GTI 15V with 280 mm diameter brake disc on the front axle

Golf VR6, Golf VR6 Syncro with 280 mm diameter brake disc on the front axle

1H0 601 025 N - Wheel and tyre combination ⇒ page 168

Size:	6$^1/_2$ J x 15
Wheel offset in mm:	43
Wheel load in kg:	490
	5

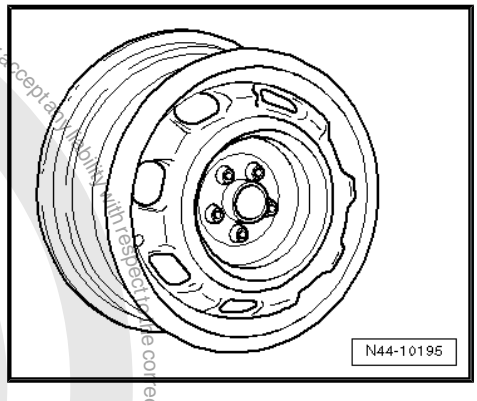

1H0 601 025 M - Wheel and tyre combination ⇒ page 168

Size:	6$^1/_2$ J x 15
Wheel offset in mm:	43
Wheel load in kg:	490
Number of wheel bolt holes:	5

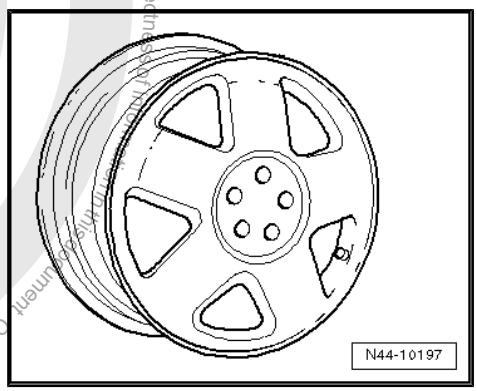

Protected by copyright. Copying for private or commercial purposes, in part or in whole, is not permitted unless authorised by Volkswagen AG. Volkswagen AG does not guarantee or accept any liability with respect to the correctness of information. Copyright by Volkswagen AG.
satelettronica

535 601 025 D - Wheel and tyre combination ⇒ page 168

Size:	$6^1/_2$ J x 15
Wheel offset in mm:	43
Wheel load in kg:	510
Number of wheel bolt holes:	5

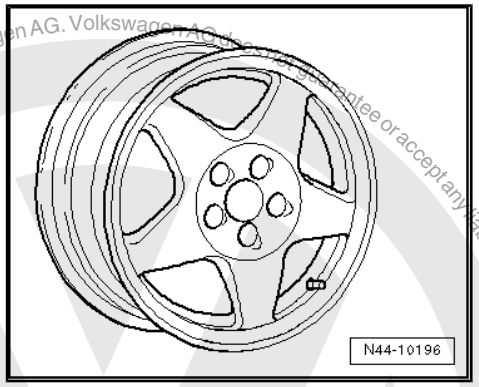

1H0 601 025 G - Wheel and tyre combination ⇒ page 168

Size:	$6^1/_2$ J x 15
Wheel offset in mm:	43
Wheel load in kg:	490
Number of wheel bolt holes:	5

Golf GTI 85 kW, Golf GTI 16V, Golf VR6, Golf VR6 Syncro

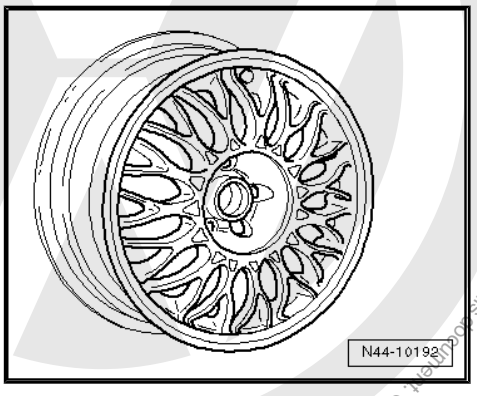

1H0 601 025 AA - Wheel and tyre combination ⇒ page 168

Size:	$6^1/_2$ J x 15
Wheel offset in mm:	43
Wheel load in kg:	500
Number of wheel bolt holes:	5

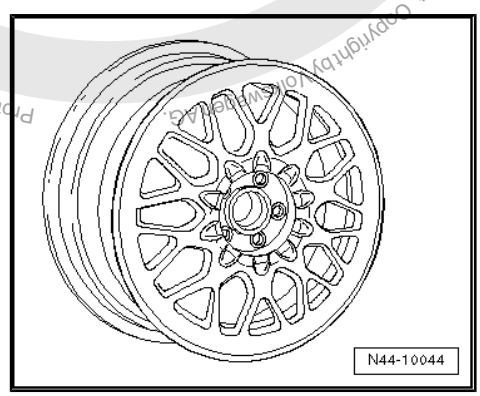

1H0 601 025 S- Wheel and tyre combination ⇒ page 168

Size:	$6^1/_2$ J x 15
Wheel offset in mm:	43
Wheel load in kg:	490
Number of wheel bolt holes:	5

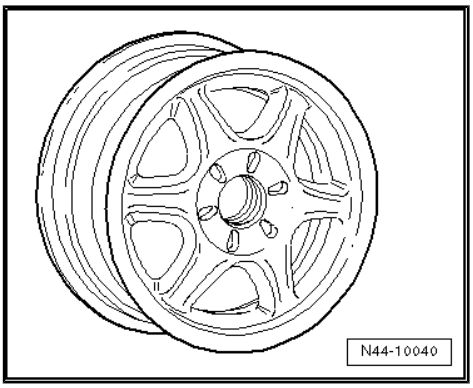

Protected by copyright. Copying for private or commercial purposes, in part or in whole, is not permitted unless authorised by Volkswagen AG. Volkswagen AG does not guarantee or accept any liability with respect to the correctness of information in this document. Copyright by Volkswagen AG.
satelettronica

Protected by copyright. Copying for private or commercial purposes, in part or in whole, is not permitted unless authorised by Volkswagen AG. Volkswagen AG does not guarantee or accept any liability with respect to the correctness of information in this document. Copyright by Volkswagen AG.

1H0 601 025 AB - Wheel and tyre combination ⇒ page 168

Size:	$6^1/_2$ J x 15
Wheel offset in mm:	43
Wheel load in kg:	510
Number of wheel bolt holes:	5

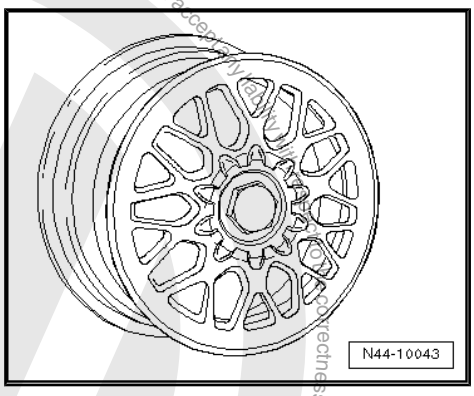

1H0 601 025 T - Wheel and tyre combination ⇒ page 168

Size:	$6^1/_2$ J x 15
Wheel offset in mm:	43
Wheel load in kg:	490
Number of wheel bolt holes:	5

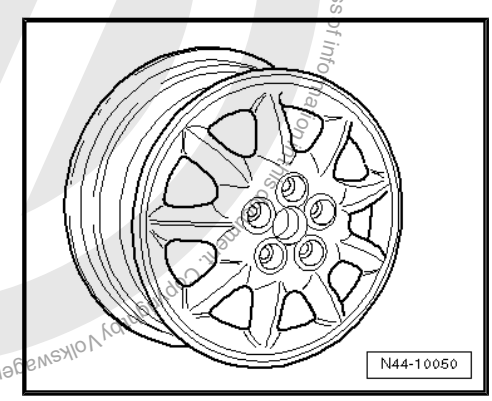

1H0 601 025 AF - Wheel and tyre combination ⇒ page 168

Size:	$6^1/_2$ J x 15
Wheel offset in mm:	43
Wheel load in kg:	490
Number of wheel bolt holes:	5

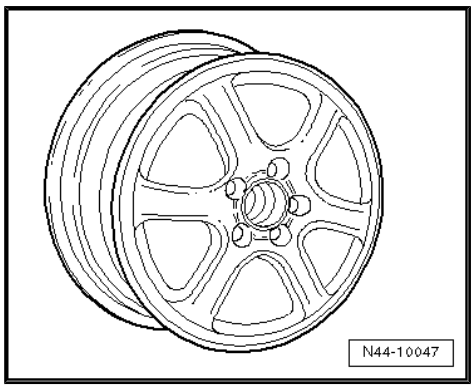

1H0 601 025 AG - Wheel and tyre combination ⇒ page 168

Size:	$6^1/_2$ J x 15
Wheel offset in mm:	43
Wheel load in kg:	500
Number of wheel bolt holes:	5

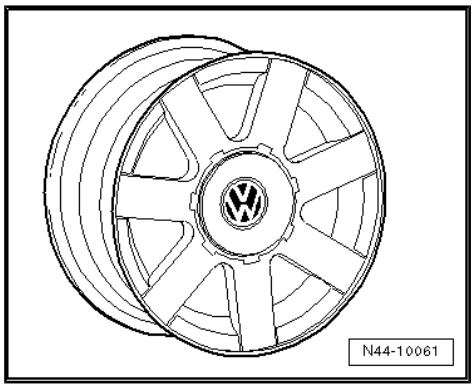

satelettronica

27.2.5 7 J x 16

Golf GTI 85 kW, Golf GTI 16V, Golf VR6

All special models “20 Years GTI”

> **Caution**
>
> *Observe the allocation of wheels and tyres to the respective engines, which are listed in the overview table* *⇒ page 166* *.*

1H0 601 025 AH - Wheel and tyre combination ⇒ page 169

Size:	7 J x 16
Wheel offset in mm:	43
Wheel load in kg:	500
Number of wheel bolt holes:	5

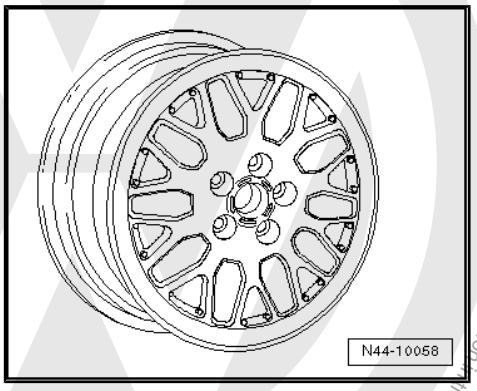

Protected by copyright. Copyright for private or commercial purposes, in part or in whole, is not permitted unless authorised by Volkswagen AG. Volkswagen AG does not guarantee or accept any liability with respect to the correctness of information in this document. Copyright by Volkswagen AG.
satelettronica

Volkswagen AG does not guarantee or accept any liability with respect to the correctness of information in this document. Copyright by Volkswagen AG.

28 Golf model year 1998 to model year 2004, Golf R32, Golf Anniversary GTI

General

Volkswagen vehicles are built according to the latest findings in safety engineering. To keep it that way, we recommend the use of only genuine Volkswagen spare parts. You can recognise this by the VW Audi logo and by the part number. It has been established that these parts are reliable, safe and suitable.

Despite constant appraisal of the market, we cannot assess other products on these points, even when in isolated cases they have been passed by official inspectors or have been granted official approval. Therefore, we cannot, of course, assume any liability if these products are installed.

> ⚠ **WARNING**
>
> *The products from Volkswagen genuine parts and Votex genuine accessories may differ in fitting requirements, torque specifications and so on.*
>
> *Always follow the respective fitting and operating instructions.*

The wheel and tyre combinations or changes listed in the vehicle tables refer exclusively to Volkswagen Genuine wheels. Approval of wheel and tyre combinations or a change to wheels from the accessories trade is not possible with the parts certificate attached here.

> ⚠ **WARNING**
>
> *The fitting instructions and torque specifications for wheels from Votex genuine accessories may differ from those intended for wheels from Volkswagen genuine parts.*
>
> *Therefore, always observe the torque settings for the wheel bolts as well as the respective fitting and operating instructions.*

28.1 Golf, Golf 4Motion, type 1J model year 1998 to model year 2004

Appendix 2 to Parts Certificate 1958/04

Type Approval No.: e1*96/79*0071*00 to e1*96/79*0071*09

Type Approval No.: e1*98/14*0071*10 to e1*98/14*0071*30

Type Approval No.: e1*2001/116*0071*31 to e1*2001/116*0071*37

Overview

Model engine output	Tyres	Tyre size	Wheel rim	Off-set in mm	Snow chains	Remarks
1.4l 55 kW petrol engine;	Standard tyres to 12/01	175/80 R 14 88T	6 J x 14 ⇒ page 183	38	Yes	

satelettronica

Model engine output	Tyres	Tyre size	Wheel rim	Off-set in mm	Snow chains	Remarks
1.9l 50 kW diesel engines	Standard tyres from 01/02	195/65 R 15 91T	6 J x 15 ⇒ page 184	38	Yes	General information on: ◆ Winter tyres ⇒ page 15 ◆ Snow chains ⇒ page 18
	Modification	195/65 R15 91T	6 J x 15 ⇒ page 184	38	Yes	Tyre makes recommended by Volkswagen: ◆ Summer tyres ⇒ page 643 ◆ All-season tyres ⇒ page 668 ◆ Winter tyres ⇒ page 681
		205/55 R 16 91H	$6^1/_2$ J x 16 ⇒ page 188	42	No	
		225/45 R 17 91W	7 J x 17 ⇒ page 192	38	No	
	Winter tyres	175/80 R 14 88Q/T	6 J x 14 ⇒ page 183	38	Yes	
		205/55 R 16 91T/H	$5^1/_2$ J x 16 ⇒ page 187	36	Yes	
1.6l 74 kW, 75 kW, 77 kW petrol engines	Standard tyres	175/80 R 14 88H	6 J x 14 ⇒ page 183	38	Yes	The 225/45 R 17 tyre may be mounted on the 7 J x 17 or the $7^1/_2$ J x 17 rim only if the listed conditions ⇒ page 195 are fulfilled!
	Modification	195/65 R 15 91H	6 J x 15 ⇒ page 184	38	Yes	
		205/55 R 16 91H	$6^1/_2$ J x 16 ⇒ page 188	42	No	The adhesive weights for balancing must be attached to the inner side of the rim of $6^1/_2$ J x 16 aluminium wheels!
		225/45 R 17 91W	7 J x 17 ⇒ page 192	38	No	
		225/45 R 17 91W	$7^1/_2$ J x 17 ⇒ page 194	38	No	4Motion vehicles: Snow chains are permitted on the front wheels only.
	Winter tyres	175/80 R 14 88Q/T	6 J x 14 ⇒ page 183	38	Yes	
		205/55 R 16 91T/H	$5^1/_2$ J x 16 ⇒ page 187	36	Yes	

Copyright by Volkswagen AG. Volkswagen AG does not guarantee or assume any liability with respect to the correctness of information in this copy. Copying for private or commercial purposes, in part or in whole, is not permitted unless authorised by Volkswagen AG. Copyright by Volkswagen AG.
satelettronica

Model engine output	Tyres	Tyre size	Wheel rim	Off-set in mm	Snow chains	Remarks
1.9l 66 kW TDI	Standard tyres	195/65 R 15 91T	6 J x 15 ⇒ page 184	38	Yes	
	Modification	205/55 R 16 91H	6 1/2 J x 16 ⇒ page 188	42	No	
		225/45 R 17 91W	7 J x 17 ⇒ page 192	38	No	
		225/45 R 17 91W	7 1/2 J x 17 ⇒ page 194	38	No	
	Winter tyres	195/65 R 15 91Q/T	6 J x 15 ⇒ page 184	38	Yes	
		205/55 R 16 91T/H	5 1/2 J x 16 ⇒ page 187	36	Yes	
1.9l 74 kW, 81 kW, 85 kW TDI; 2.0l 85 kW petrol engine; 1.6l 81 kW petrol engine	Standard tyres	195/65 R 15 91H	6 J x 15 ⇒ page 184	38	Yes	
	Modification	205/55 R 16 91H	6 1/2 J x 16 ⇒ page 188	42	No	
		225/45 R 17 91W	7 J x 17 ⇒ page 192	38	No	
		225/45 R 17 91W	7 1/2 J x 17 ⇒ page 194	38	No	
	Winter tyres	195/65 R 15 91Q/T	6 J x 15 ⇒ page 184	38	Yes	
		205/55 R 16 91T/H	5 1/2 J x 16 ⇒ page 187	36	Yes	
1.8l 92 kW; 1.8l 110 kW; 2.3l 110 kW petrol engines; 1.9l 96 kW TDI; 1.9l 110 kW TDI	Standard tyres	195/65 R 15 91V	6 J x 15 ⇒ page 184	38	Yes	
	Modification	205/55 R 16 91V	6 1/2 J x 16 ⇒ page 188	42	No	
		225/45 R 17 91W	7 J x 17 ⇒ page 192	38	No	
		225/45 R 17 91W	7 1/2 J x 17 ⇒ page 194	38	No	
	Winter tyres	195/65 R 15 91Q/T	6 J x 15 ⇒ page 184	38	Yes	
		205/55 R 16 91T/H	5 1/2 J x 16 ⇒ page 187	36	Yes	

Copyright by Volkswagen AG. Volkswagen AG does not guarantee or accept any liability with respect to the correctness of information in this document. Copying for private or commercial purposes, in part or in whole, is not permitted unless authorised by Volkswagen AG. Copyright protected by copyright laws.
satelettronica

Model engine output	Tyres	Tyre size	Wheel rim	Off-set in mm	Snow chains	Remarks
1.8l 132 kW; 2.3l 125 kW	Standard tyres	205/55 R 16 91W	$6^1/_2$ J x 16 ⇒ page 190	42	No	
	Modification	205/55 R 16 91W	$6^1/_2$ J x 16 ⇒ page 190	42	No	
		225/45 R 17 91W	7 J x 17 ⇒ page 192	38	No	
		225/45 R 17 91W	$7^1/_2$ J x 17 ⇒ page 194	38	No	
	Winter tyres	205/55 R 16 91T/H	$5^1/_2$ J x 16 ⇒ page 187	36	Yes	
2.8l 150 kW	Standard tyres	205/55 R 16 91W	$6^1/_2$ J x 16 ⇒ page 190	42	No	
	Modification	225/45 R 17 91W	7 J x 17 ⇒ page 192	38	No	
		225/45 R 17 91W	$7^1/_2$ J x 17 ⇒ page 194	38	No	
	Winter tyres	205/55 R 16 91T/H	$5^1/_2$ J x 16 ⇒ page 187	36	Yes	

Tyre pressures can be found on the inside of the fuel tank flap or in ⇒ Maintenance ; Booklet 37

28.2 Wheel allocation for Golf, Golf 4Motion, type 1J model year 1998 to model year 2004

Explanation of information on wheels ⇒ page 59

Wheel bolt torque settings ⇒ Running gear, axles, steering - front and four-wheel drive; Rep. gr. 44 ; Wheel bolt torque settings

Pitch circle diameter:	100 mm
Number of wheel bolt holes:	5

28.2.1 6 J x 14

Caution

Observe the allocation of wheels and tyres to the respective engines, which are listed in the overview table ⇒ page 180 .

Protected by copyright. Copying for private or commercial purposes, in part or in whole, is not permitted unless authorised by Volkswagen AG. Volkswagen AG does not guarantee or accept any liability with respect to the correctness of information in this document. Copyright by Volkswagen AG.
satelettronica

For Golf 55 kW, 74 kW, 77 kW petrol engines, 50 kW diesel

1J0 601 027 J - Wheel and tyre combination ⇒ page 180

Size:	6 J x 14
Wheel offset in mm:	38
Wheel load in kg:	520

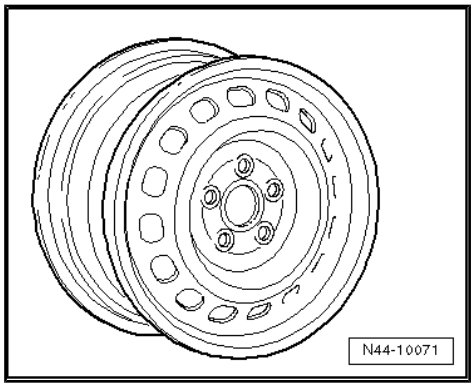

1J0 601 027 N, 1J0 601 027 P - Wheel and tyre combination
⇒ page 180

Size:	6 J x 14
Wheel offset in mm:	38
Wheel load in kg:	520

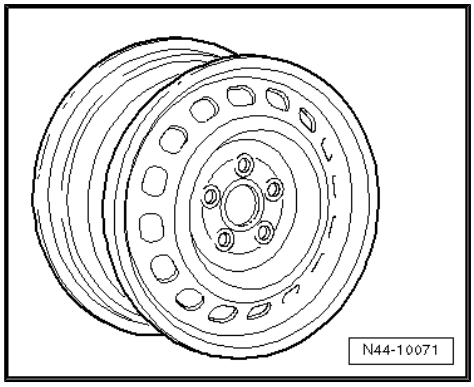

28.2.2 6 J x 15

Caution

Observe the allocation of wheels and tyres to the respective engines, which are listed in the overview table ⇒ page 180 *.*

For Golf 55 kW, 74 kW, 77 kW petrol engines, 50 kW diesel

1J0 601 025 N, 1J0 601 025 AG - Wheel and tyre combination
⇒ page 181

Note

These rims are allowed only for vehicles with a maximum permitted axle load of 1,000 kg.

Size:	6 J x 15
Wheel offset in mm:	38
Wheel load in kg:	500

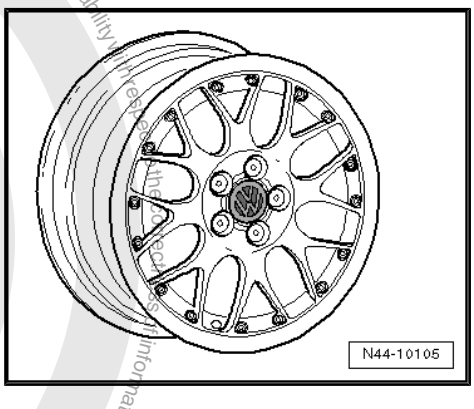

For vehicles up to and including 96 kW and petrol engines to 110 kW

Protected by copyright. Copying for private or commercial purposes, in part or in whole, is not permitted unless authorised by Volkswagen AG. Volkswagen AG does not guarantee or accept any liability with respect to the correctness of information in this document. Copyright by Volkswagen AG.
satelettronica

1J0 601 027 - Wheel and tyre combination ⇒ page 181

Size:	6 J x 15
Wheel offset in mm:	38
Wheel load in kg:	550

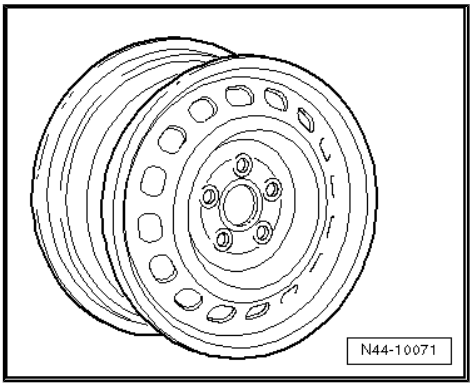

1J0 601 027 H, 1J0 601 027 Q - Wheel and tyre combination ⇒ page 181

Size:	6 J x 15
Wheel offset in mm:	38
Wheel load in kg:	550

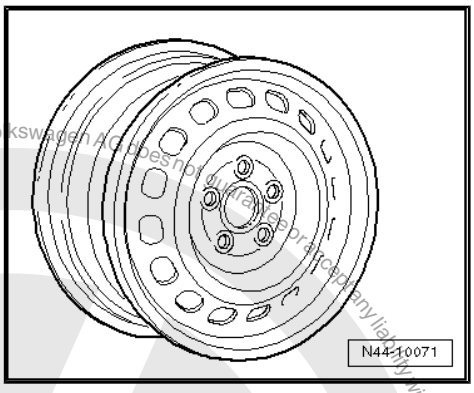

1J0 601 025 B, 1J0 601 025 AA - Wheel and tyre combination ⇒ page 181

Note

These rims are allowed only for vehicles with a maximum permitted axle load of 1,000 kg.

Size:	6 J x 15
Wheel offset in mm:	38
Wheel load in kg:	500

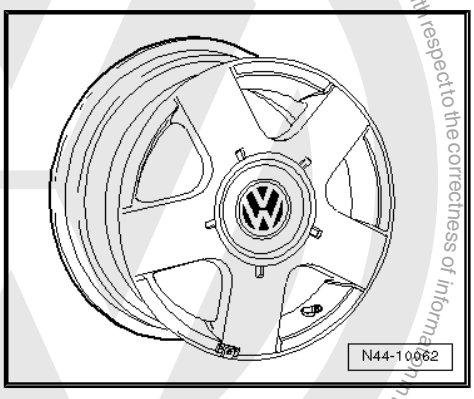

1J0 601 025 Q - Wheel and tyre combination ⇒ page 181

Size:	6 J x 15
Wheel offset in mm:	38
Wheel load in kg:	530

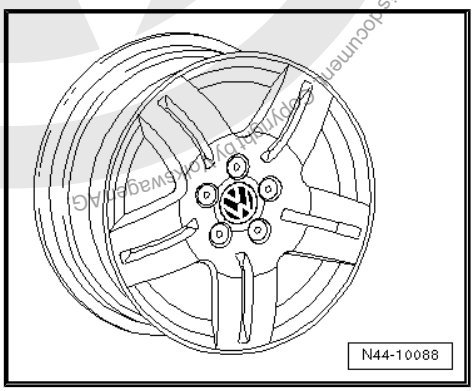

Protected by copyright. Copying for private or commercial purposes, in part or in whole, is not permitted unless authorised by Volkswagen AG. Volkswagen AG does not guarantee or accept any liability with respect to the correctness of information in this document. Copyright by Volkswagen AG.
satelettronica

1J0 601 025 AK - Wheel and tyre combination ⇒ page 181

Size:	6 J x 15
Wheel offset in mm:	38
Wheel load in kg:	580

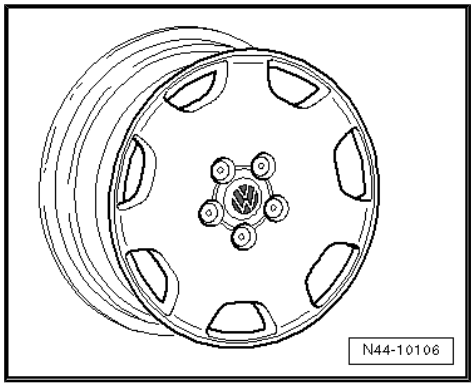

1C0 601 025 F - Wheel and tyre combination ⇒ page 181

Size:	6 J x 15
Wheel offset in mm:	38
Wheel load in kg:	550

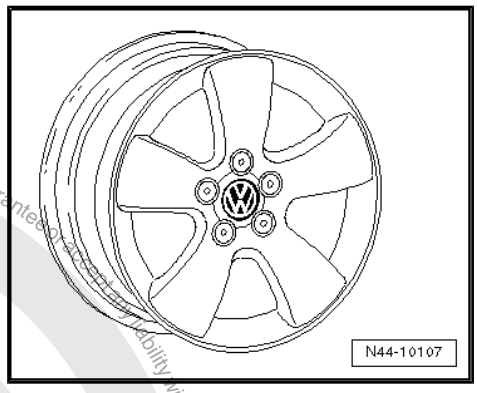

1J0 601 025 P, 1J0 601 025 AL - Wheel and tyre combination ⇒ page 181

Size:	6 J x 15
Wheel offset in mm:	38
Wheel load in kg:	550

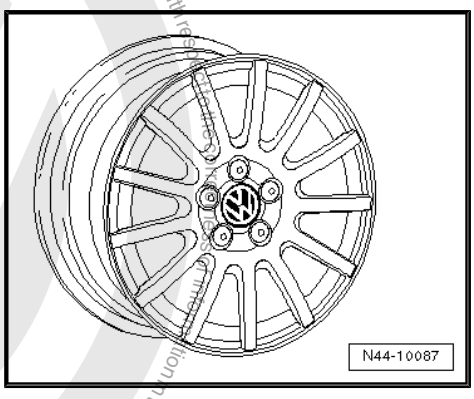

1J0 601 025 BD - Wheel and tyre combination ⇒ page 181

Size:	6 J x 15
Wheel offset in mm:	38
Wheel load in kg:	580

For vehicles with 110 kW TDI and petrol engines 1.8l 132 kW, 2.3l 125 kW, 2.8l 150 kW

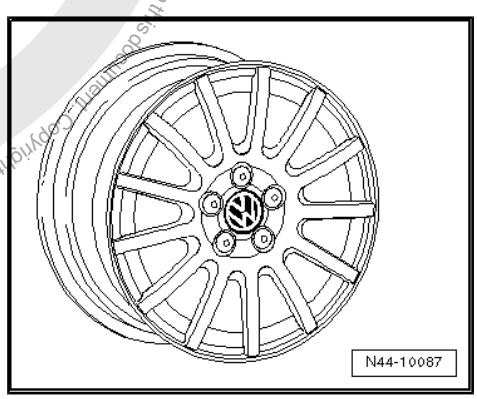

satelettronica

1J0 601 025 P, 1J0 601 025 AL - Wheel and tyre combination
⇒ page 182

Size:	6 J x 15
Wheel offset in mm:	38
Wheel load in kg:	550

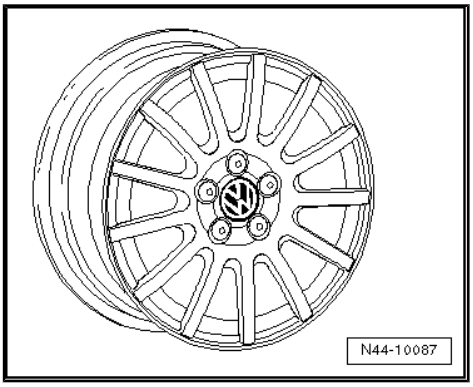

1J0 601 025 BD - Wheel and tyre combination ⇒ page 182

Size:	6 J x 15
Wheel offset in mm:	38
Wheel load in kg:	580

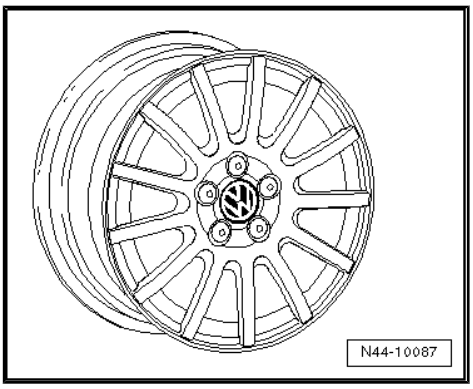

28.2.3 5 1/2 J x 16

Caution

Observe the allocation of wheels and tyres to the respective engines, which are listed in the overview table *⇒ page 180* *.*

For vehicles up to and including 96 kW and petrol engines to 110 kW

For vehicles with 110 kW TDI and petrol engines 1.8l 132 kW, 2.3l 125 kW, 2.8l 150 kW

Winter wheels

1J0 601 025 M, 1J0 601 025 AF - Wheel and tyre combination
⇒ page 181

Size:	5 1/2 J x 16
Wheel offset in mm:	36
Wheel load in kg:	550

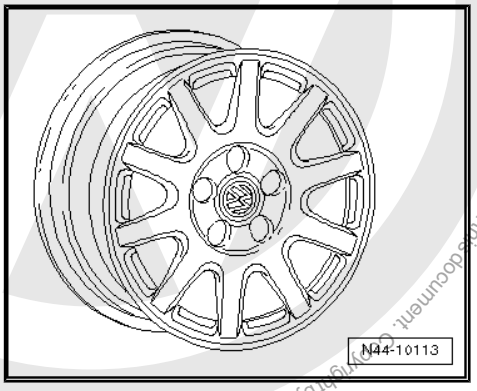

Protected by copyright. Copying for private or commercial purposes, in part or in whole, is not permitted unless authorised by Volkswagen AG. Volkswagen AG does not guarantee or accept any liability with respect to the correctness of information in this document. Copyright by Volkswagen AG.
satelettronica

28.2.4 6 1/2 J x 16

Caution

Observe the allocation of wheels and tyres to the respective engines, which are listed in the overview table ⇒ page 180 *.*

For vehicles up to and including 96 kW and petrol engines to 110 kW

1C0 601 025 A, 1C0 601 025 D - Wheel and tyre combination
⇒ page 181

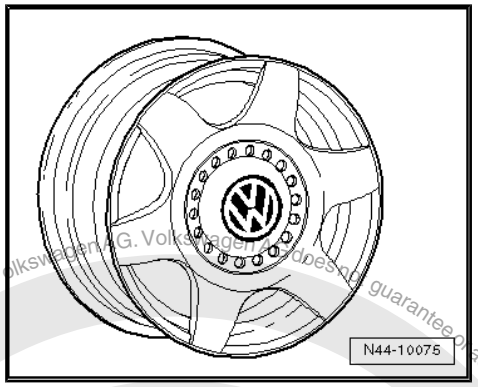

Note

These rims are allowed only for vehicles with a maximum permitted axle load of 1,000 kg.

Size:	6 1/2 J x 16
Wheel offset in mm:	42
Wheel load in kg:	500

1J0 601 027 L, 1J0 601 027 R - Wheel and tyre combination
⇒ page 181

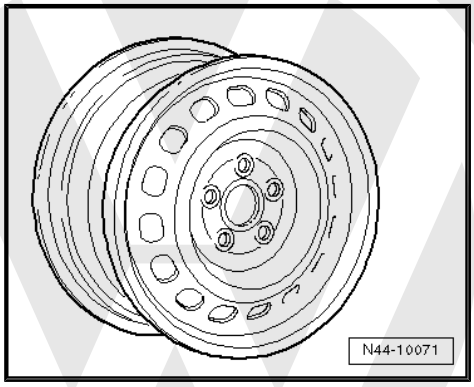

Size:	6 1/2 J x 16
Wheel offset in mm:	42
Wheel load in kg:	550

1J0 601 025 F, 1J0 601 025 AC - Wheel and tyre combination
⇒ page 181

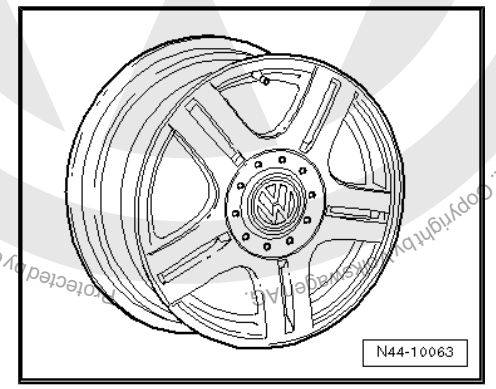

Size:	6 1/2 J x 16
Wheel offset in mm:	42
Wheel load in kg:	530

Copyright by Volkswagen AG. Volkswagen AG does not guarantee or accept any liability with respect to the correctness of information in this document. Copyright by Volkswagen AG. Copying for private or commercial purposes, in part or in whole, is not permitted unless authorised by Volkswagen AG.
salettronica

1J0 601 025 E, 1J0 601 025 AD - Wheel and tyre combination
⇒ page 181

Size:	$6^1/_2$ J x 16
Wheel offset in mm:	42
Wheel load in kg:	530

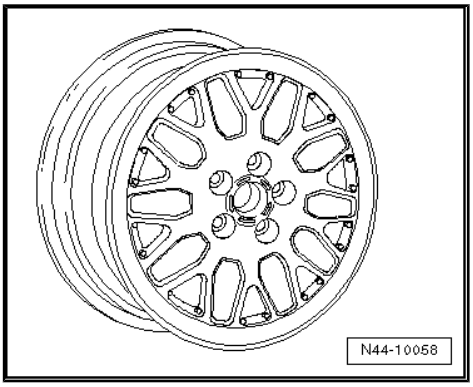

1J0 601 025 H, 1J0 601 025 AH - Wheel and tyre combination
⇒ page 181

Size:	$6^1/_2$ J x 16
Wheel offset in mm:	42
Wheel load in kg:	530

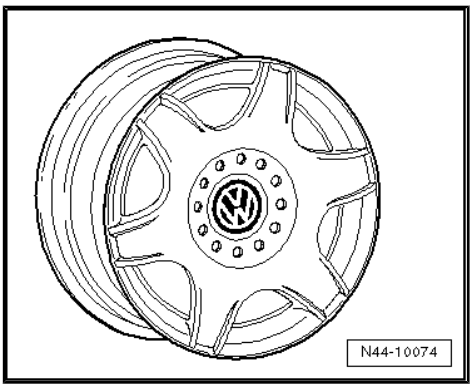

1J0 601 025 L, 1J0 601 025 AE - Wheel and tyre combination
⇒ page 181

Size:	$6^1/_2$ J x 16
Wheel offset in mm:	42
Wheel load in kg:	550

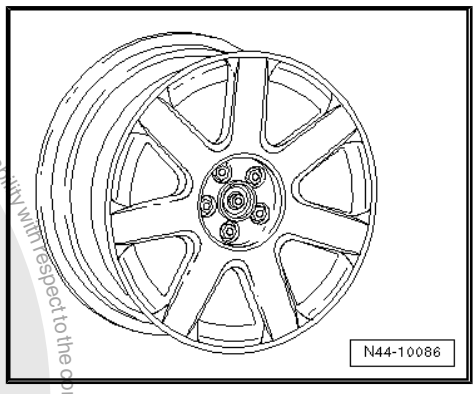

1C0 601 025 G - Wheel and tyre combination ⇒ page 181

Size:	$6^1/_2$ J x 16
Wheel offset in mm:	42
Wheel load in kg:	550

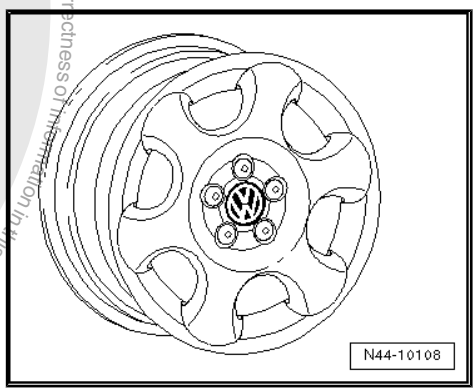

Protected by copyright. Copying for private or commercial purposes, in part or in whole, is not permitted unless authorised by Volkswagen AG. Volkswagen AG does not guarantee or accept any liability with respect to the correctness of information in this document. Copyright by Volkswagen AG.
satelettronica

1C0 601 025 H - Wheel and tyre combination ⇒ page 181

Size:	$6^1/_2$ J x 16
Wheel offset in mm:	42
Wheel load in kg:	550

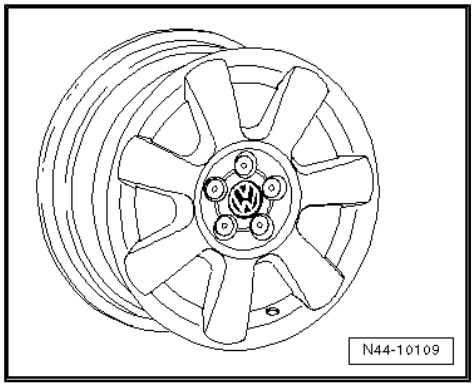

1J0 601 025 R, 1J0 601 025 AN - Wheel and tyre combination ⇒ page 181

Size:	$6^1/_2$ J x 16
Wheel offset in mm:	42
Wheel load in kg:	550

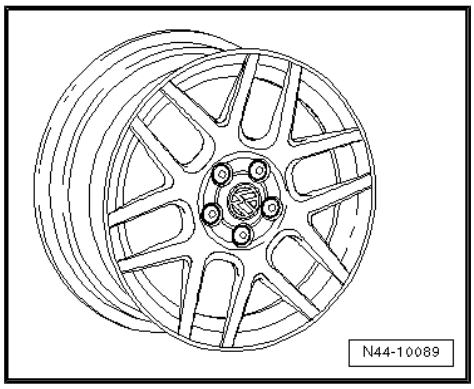

1J0 601 025 T, 1J0 601 025 AJ - Wheel and tyre combination ⇒ page 181

Size:	$6^1/_2$ J x 16
Wheel offset in mm:	42
Wheel load in kg:	550

For vehicles with 110 kW TDI and petrol engines 1.8l 132 kW, 2.3l 125 kW, 2.8l 150 kW

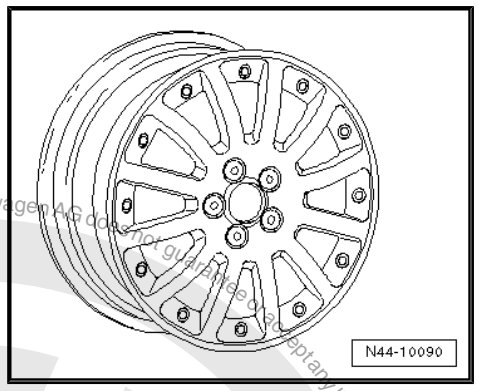

1J0 601 027 L, 1J0 601 027 R - Wheel and tyre combination ⇒ page 182

Size:	$6^1/_2$ J x 16
Wheel offset in mm:	42
Wheel load in kg:	550

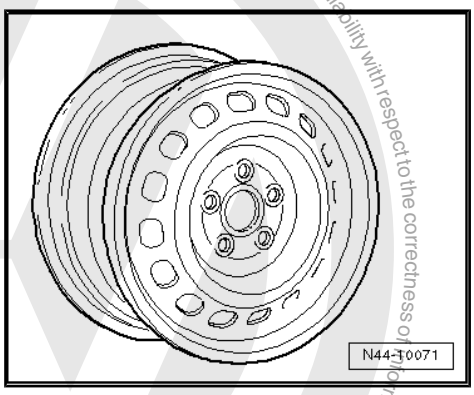

Protected by copyright. Copying for private or commercial purposes, in part or in whole, is not permitted unless authorised by Volkswagen AG. Volkswagen AG does not guarantee or accept any liability with respect to the correctness of information in this document. Copyright by Volkswagen AG.
satelettronica

1J0 601 025 F, 1J0 601 025 AC - Wheel and tyre combination
⇒ page 182

Size:	$6^1/_2$ J x 16
Wheel offset in mm:	42
Wheel load in kg:	530

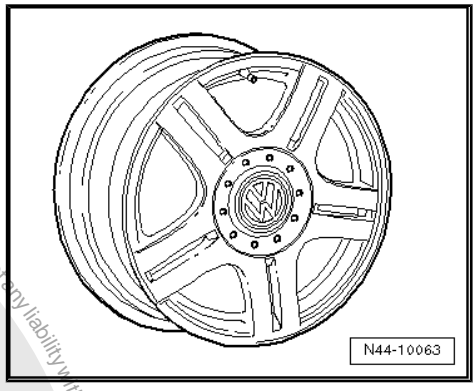

1J0 601 025 L, 1J0 601 025 AE - Wheel and tyre combination
⇒ page 182

Size:	$6^1/_2$ J x 16
Wheel offset in mm:	42
Wheel load in kg:	550

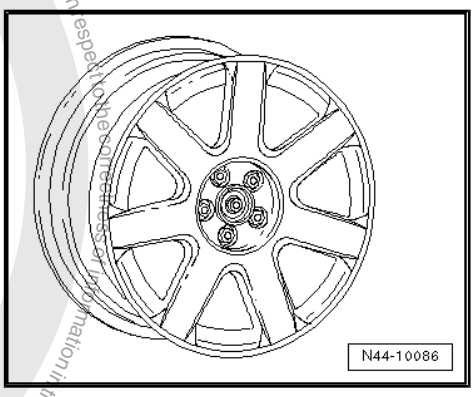

1J0 601 025 AN, 1J0 601 025 R - Wheel and tyre combination
⇒ page 182

Size:	$6^1/_2$ J x 16
Wheel offset in mm:	42
Wheel load in kg:	550

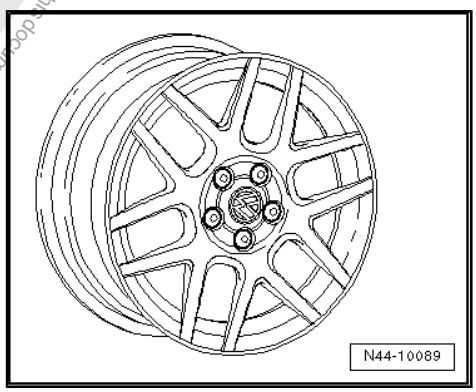

1J0 601 025 T, 1J0 601 025 AJ - Wheel and tyre combination
⇒ page 182

Size:	$6^1/_2$ J x 16
Wheel offset in mm:	42
Wheel load in kg:	550

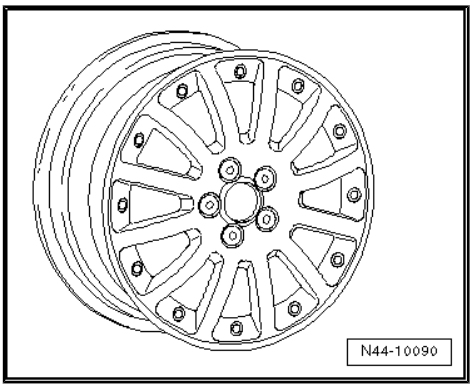

Protected by copyright. Copying for private or commercial purposes, in part or in whole, is not permitted unless authorised by Volkswagen AG. Volkswagen AG does not guarantee or accept any liability with respect to the correctness of information in this document. Copyright by Volkswagen AG.
satelettronica

1C0 601 025 G - Wheel and tyre combination ⇒ page 182

Size:	$6^1/_2$ J x 16
Wheel offset in mm:	42
Wheel load in kg:	550

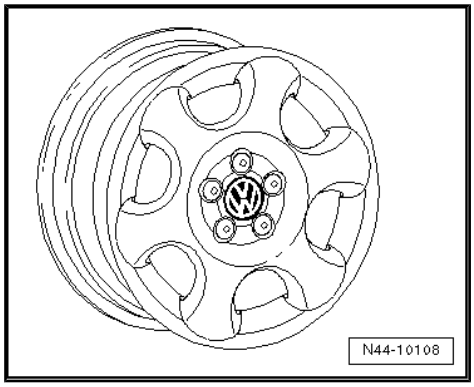

1C0 601 025 H - Wheel and tyre combination ⇒ page 182

Size:	$6^1/_2$ J x 16
Wheel offset in mm:	42
Wheel load in kg:	550

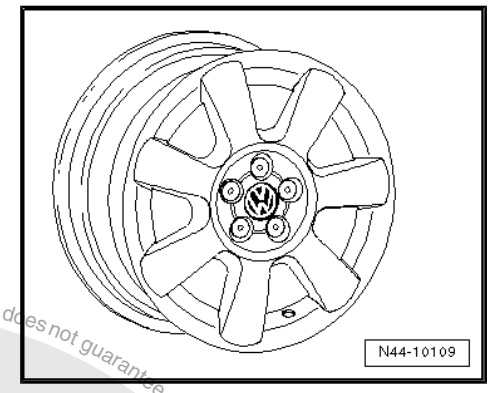

28.2.5 7 J x 17

The following wheels are permitted only if the stated conditions ⇒ page 195 **are fulfilled.**

> ⚠ **Caution**
>
> ***Observe the allocation of wheels and tyres to the respective engines, which are listed in the overview table*** ⇒ page 180 ***.***

1J0 601 025 J, 1J0 601 025 S - Wheel and tyre combination ⇒ page 181

Size:	7 J x 17
Wheel offset in mm:	38
Wheel load in kg:	580

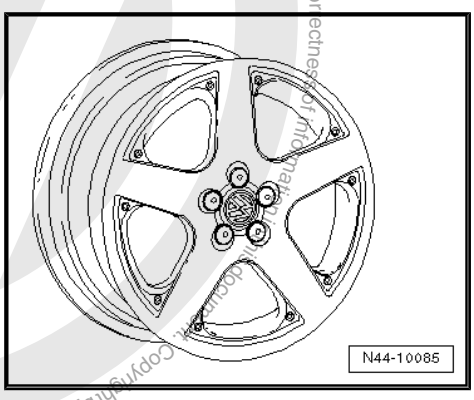

Protected by copyright. Copying for private or commercial purposes, in part or in whole, is not permitted unless authorised by Volkswagen AG. Volkswagen AG does not guarantee or accept any liability with respect to the correctness of information. Copyright by Volkswagen AG.
satelettronica

1J0 601 025 AB - Wheel and tyre combination ⇒ page 181

Size:	7 J x 17
Wheel offset in mm:	38
Wheel load in kg:	550

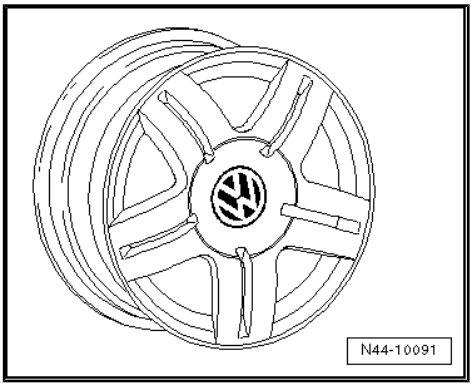

1C0 601 025 B, 1C0 601 025 E - Wheel and tyre combination ⇒ page 181

Size:	7 J x 17
Wheel offset in mm:	38
Wheel load in kg:	550

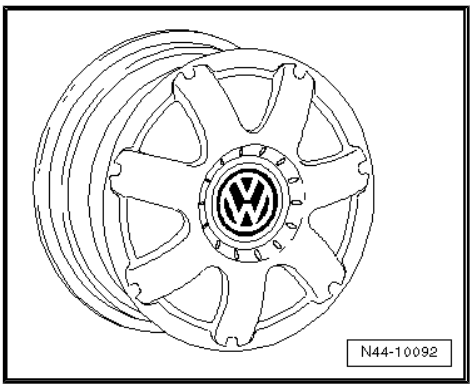

1C0 601 025 J - Wheel and tyre combination ⇒ page 181

Size:	7 J x 17
Wheel offset in mm:	38
Wheel load in kg:	550

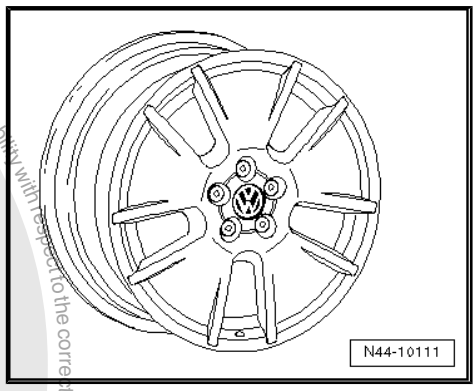

1C0 601 025 K, 1C0 601 025 Q - Wheel and tyre combination ⇒ page 181

Alloy disc-type wheels with exchangeable trim elements ⇒ page 60

Size:	7 J x 17
Wheel offset in mm:	38
Wheel load in kg:	550

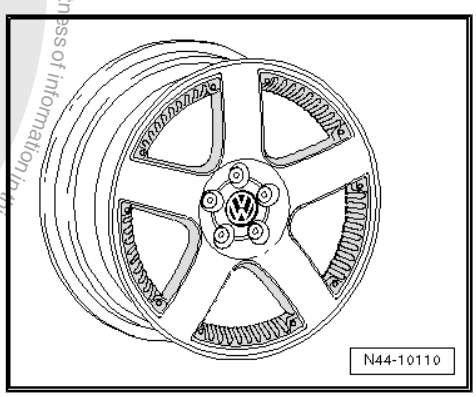

Protected by copyright. Copyright by Volkswagen AG.
Copyright by Volkswagen AG. Volkswagen AG does not guarantee or accept any liability with respect to the correctness of information in this document.
This document is not to be reproduced for commercial purposes, in part or in whole, is not permitted unless authorised by Volkswagen AG.
satelettronica

1J0 601 025 BE - Wheel and tyre combination ⇒ page 181

Size:	7 J x 17
Wheel offset in mm:	38
Wheel load in kg:	550

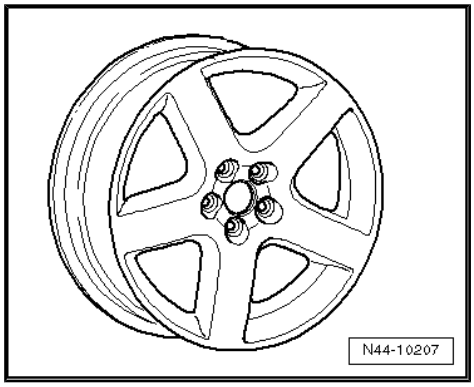

1J0 601 025 AS - Wheel and tyre combination ⇒ page 181

Size:	7 J x 17
Wheel offset in mm:	38
Wheel load in kg:	550

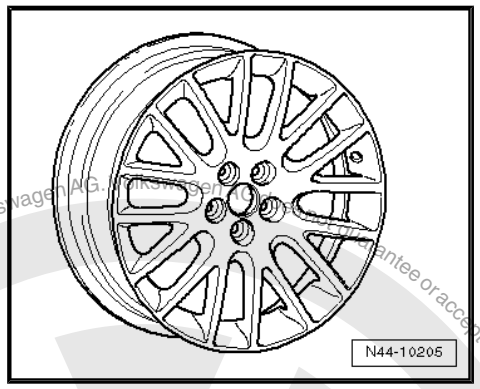

1C0 601 025 M - Wheel and tyre combination ⇒ page 181

Size:	7 J x 17
Wheel offset in mm:	38
Wheel load in kg:	550

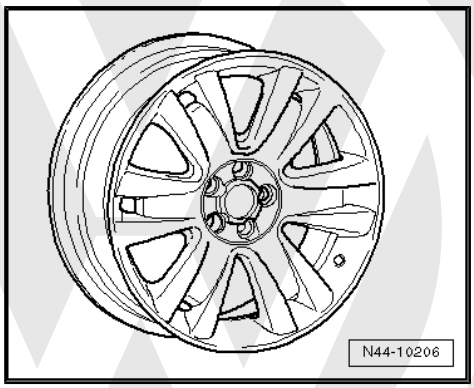

28.2.6 7 1/2 J x 17

The following wheels are permitted only if the stated conditions ⇒ page 195 **are fulfilled.**

> ⚠ **Caution**
>
> *Observe the allocation of wheels and tyres to the respective engines, which are listed in the overview table* ⇒ page 180 *.*

Protected by copyright. Copying for private or commercial purposes, in part or in whole, is not permitted unless authorised by Volkswagen AG. Volkswagen AG does not guarantee or accept any liability with respect to the correctness of information in this document. Copyright by Volkswagen AG.
satelettronica

1J0 601 025 BF - Wheel and tyre combination ⇒ page 181

Size:	$7^1/_2$ J x 17
Wheel offset in mm:	38
Wheel load in kg:	550

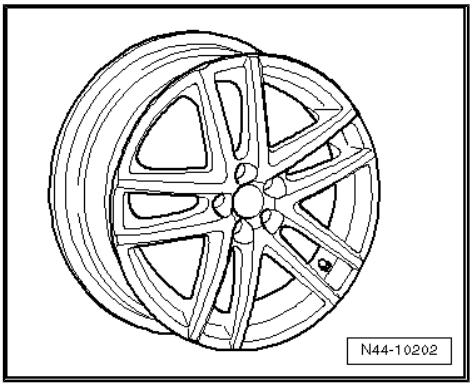

1J0 601 025 BH - Wheel and tyre combination ⇒ page 181

Size:	$7^1/_2$ J x 17
Wheel offset in mm:	38
Wheel load in kg:	560

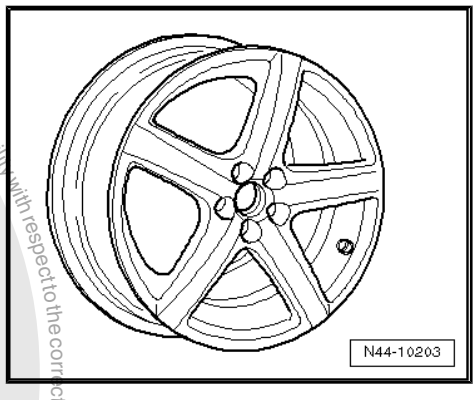

28.3 Conditions for fitting 17" wheels and tyres to Golf model year 1998 to model year 2004

17" wheels with 225/45 R 17 tyres are possible only:

1. For vehicles from model year 2001.

2. If 17" sports running gear and a steering box with reduced steering arm travel is installed in the vehicle

Allocation of steering box PR No. to engine:	
PR No. of steering box	**Engine**
QZ 3[5)]	1.8l; 2.0l; 2.3l petrol engines; 1.9l diesel engines
QZ 4[5)]	Up to and including 1.6l petrol engines
QZ 5[5)]	VR6 (US version); VR6 4Motion

5) Replacement part numbers ⇒ Electronic parts catalogue “ETKA”

3. If tyres with a maximum width of 218 mm are used.

4. If snow chains are not used.

Maximum width of 17" tyres

If a vehicle is retrofitted with 17" tyres or if existing 17" tyres are renewed, use only tyres with a maximum width -a- which does not exceed 218 mm during use [6)].

6) The measured width of the tyre including lettering on 7 J x 17 or $7^1/_2$ J x 17 and at the specified tyre pressure.

If wider tyres are used, under certain circumstances, the tyres may contact the front axle and the bodywork while the car is being driven.

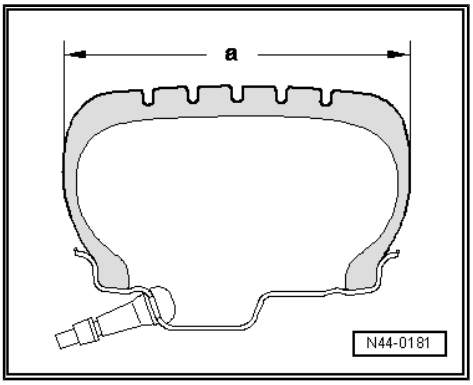

Protected by copyright. Copyright by Volkswagen AG. Volkswagen AG does not guarantee or accept any liability with respect to the correctness of information in this document. Copyright by Volkswagen AG. Reproduced for commercial purposes, in part or in whole, is not permitted unless authorised by Volkswagen AG.
satelettronica

28.4 Golf R32, type 1J model year 2003 to model year 2005

Appendix 2 to Parts Certificate 1958/04

Type Approval No.: e1*98/14*0071*26 to e1*98/14*0071*30

Type Approval No.: e1*2001/116*0071*31 to e1*2001/116*0071*37

Overview

Model engine output	Tyres	Tyre size	Wheel rim	Off-set in mm	Snow chains	Remarks
3.2l 177 kW	Standard tyres	225/40 R 18 88Y	$7^1/_2$ J x 18 ⇒ page 197	38	No	General information on: ◆ Winter tyres ⇒ page 15 ◆ Snow chains ⇒ page 18
	Modification	225/45 R 17 91W	$7^1/_2$ J x 17 ⇒ page 197	38	No	Tyre makes recommended by Volkswagen: ◆ Summer tyres ⇒ page 651 ◆ Winter tyres ⇒ page 686
	Winter tyres	205/50 R 17 93T/H	$5^1/_2$ J x 17 ⇒ page 197	36	Yes	Tyre pressures for winter tyres ⇒ page 196 Snow chains are only permissible on the front wheels!

Tyre pressures can be found on the inside of the fuel tank flap or in ⇒ Maintenance ; Booklet 37

Tyre pressures for winter tyres:

Tyre pressure M + S:	
Part load front:	2.3
Part load rear:	2.1
Full load front:	2.5
Full load rear:	2.9

28.5 Wheel allocation for Golf R32, type 1J model year 2003 to model year 2005

Explanation of information on wheels ⇒ page 59

Wheel bolt torque settings ⇒ Running gear, axles, steering - front and four-wheel drive; Rep. gr. 44 ; Wheel bolt torque settings

Pitch circle diameter:	100 mm
Number of wheel bolt holes:	5

Protected by copyright. Copying for private or commercial purposes, in part or in whole, is not permitted unless authorised by Volkswagen AG. Volkswagen AG does not guarantee or accept any liability with respect to the correctness of information in this document. Copyright by Volkswagen AG.

satelettronica

28.5.1 5 1/2 J x 17

Caution

Observe the allocation of wheels and tyres to the respective engines, which are listed in the overview table ⇒ page 196 .

1J0 601 025 BB - Wheel and tyre combination ⇒ page 196

M + S wheel with snow chain

Size:	5 1/2 J x 17
Wheel offset in mm:	36
Wheel load in kg:	550

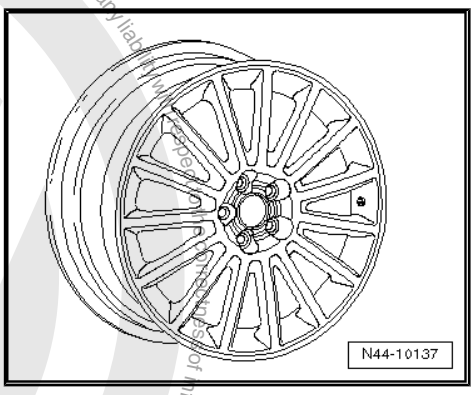

28.5.2 7 1/2 J x 17

Caution

Observe the allocation of wheels and tyres to the respective engines, which are listed in the overview table ⇒ page 196 .

1J0 601 025 BC - Wheel and tyre combination ⇒ page 196

Note

No snow chains permitted!

Size:	7 1/2 J x 17
Wheel offset in mm:	38
Wheel load in kg:	550

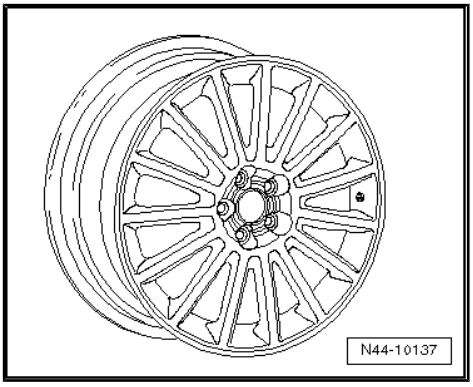

28.5.3 7 1/2 J x 18

Caution

Observe the allocation of wheels and tyres to the respective engines, which are listed in the overview table ⇒ page 196 .

Protected by copyright. Copyright by Volkswagen AG. Volkswagen AG does not guarantee or accept any liability with respect to the correctness of information in this document. Copyright by Volkswagen AG. Protected by copyright. Commercial use or distribution of the data is not permitted unless authorised by Volkswagen AG. Volkswagen AG does not guarantee or accept any liability with respect to the correctness of information in this document. Copyright by Volkswagen AG.
satelettronica

1J0601 025 AP, 1J0 601 025 BA - Wheel and tyre combination
⇒ page 196

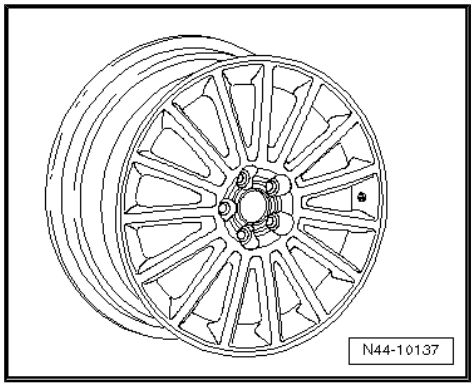

Note

No snow chains permitted!

Size:	$7^1/_2$ J x 18
Wheel offset in mm:	38
Wheel load in kg:	550

28.6 Golf Anniversary GTI, type 1J model year 2002

Appendix 2 to Parts Certificate 1486/03

Type Approval No.: e1*98/14*0071*21 to e1*98/14*0071*24

Overview

Model engine output	Tyres	Tyre size	Wheel rim	Off-set in mm	Snow chains	Remarks
1.8l 132 kW	Standard tyres	225/40 R 18 88Y	$7^1/_2$ J x 18 ⇒ page 202	38	No	General information on: ◆ Winter tyres ⇒ page 15 ◆ Snow chains ⇒ page 18
	Modification	205/55 R 16 91W	$6^1/_2$ J x 16 ⇒ page 199	42	No	Tyre makes recommended by Volkswagen: ◆ Summer tyres ⇒ page 652 ◆ Winter tyres ⇒ page 686
		225/45 R 17 91W	7 J x 17 ⇒ page 201	38	No	
	Winter tyres	205/55 R 16 91T/H	$5^1/_2$ J x 16 ⇒ page 199	36	Yes	Fitting 17" and 18" wheels and tyres is permitted only if the stated conditions ⇒ page 203 are fulfilled. Snow chains are only permissible on the front wheels!

Tyre pressures can be found on the inside of the fuel tank flap or in ⇒ Maintenance ; Booklet 37

28.7 Wheel allocation for Golf Anniversary GTI, type 1J model year 2002

Explanation of information on wheels ⇒ page 59

Wheel bolt torque settings ⇒ Running gear, axles, steering - front and four-wheel drive; Rep. gr. 44 ; Wheel bolt torque settings

Pitch circle diameter:	100 mm
Number of wheel bolt holes:	5

satelettronica

28.7.1 5 1/2 J x 16

> **Caution**
>
> *Observe the allocation of wheels and tyres to the respective engines, which are listed in the overview table* ⇒ page 198 *.*

Winter wheels

1J0 601 025 M, 1J0 601 025 AF - Wheel and tyre combination
⇒ page 198

Size:	5 1/2 J x 16
Wheel offset in mm:	36
Wheel load in kg:	550

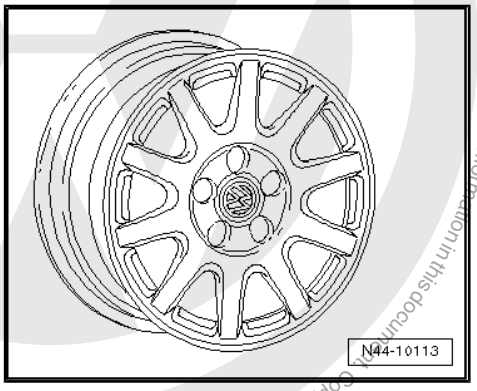

28.7.2 6 1/2 J x 16

1J0 601 027 L, 1J0 601 027 R - Wheel and tyre combination
⇒ page 198

Size:	6 1/2 J x 16
Wheel offset in mm:	42
Wheel load in kg:	550

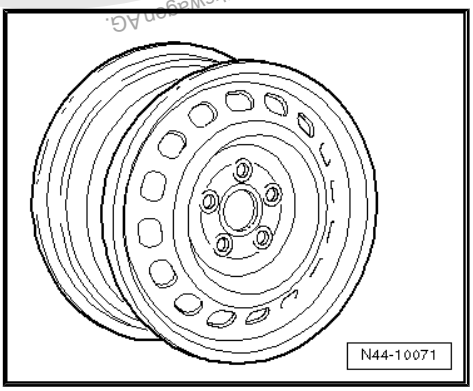

1J0 601 025 F, 1J0 601 025 AC - Wheel and tyre combination
⇒ page 198

Size:	6 1/2 J x 16
Wheel offset in mm:	42
Wheel load in kg:	530

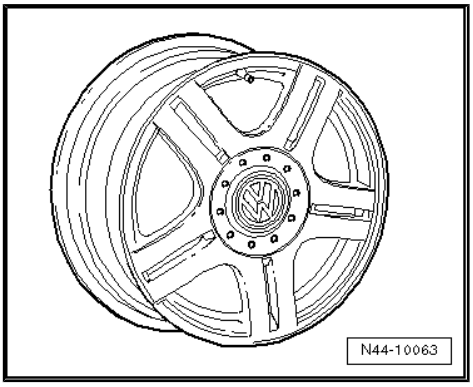

Protected by copyright. Copying for private or commercial purposes, in part or in whole, is not permitted unless authorised by Volkswagen AG. Volkswagen AG does not guarantee or accept any liability with respect to the correctness of information in this document. Copyright by Volkswagen AG.
satelettronica

1J0 601 025 L, 1J0 601 025 AE - Wheel and tyre combination
⇒ page 198

Size:	$6^1/_2$ J x 16
Wheel offset in mm:	42
Wheel load in kg:	550

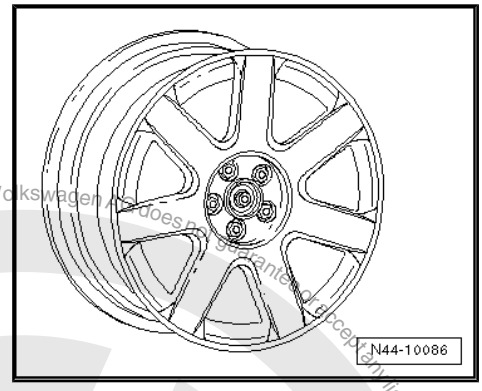

1J0 601 025 R - Wheel and tyre combination ⇒ page 198

Size:	$6^1/_2$ J x 16
Wheel offset in mm:	42
Wheel load in kg:	550

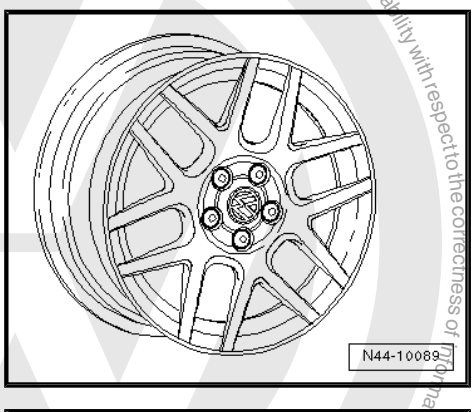

1J0 601 025 T, 1J0 601 025 AJ - Wheel and tyre combination
⇒ page 198

Size:	$6^1/_2$ J x 16
Wheel offset in mm:	42
Wheel load in kg:	550

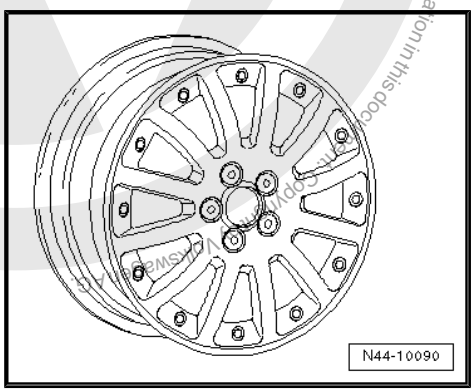

1C0 601 025 G - Wheel and tyre combination ⇒ page 198

Size:	$6^1/_2$ J x 16
Wheel offset in mm:	42
Wheel load in kg:	550

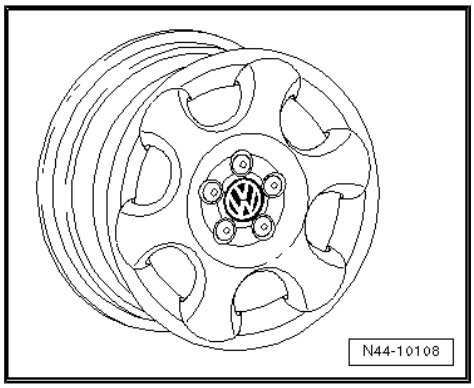

Protected by copyright. Copying for private or commercial purposes, in part or in whole, is not permitted unless authorised by Volkswagen AG. Volkswagen AG does not guarantee or accept any liability with respect to the correctness of information in this document. Copyright by Volkswagen AG.

satelettronica

1C0 601 025 H - Wheel and tyre combination ⇒ page 198

Size:	6 1/2 J x 16
Wheel offset in mm:	42
Wheel load in kg:	550

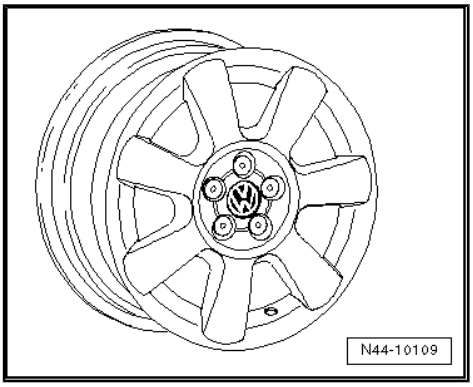

28.7.3 7 J x 17

The following wheels are permitted only if the stated conditions ⇒ page 203 are fulfilled.

> ⚠ **Caution**
>
> *Observe the allocation of wheels and tyres to the respective engines, which are listed in the overview table* *⇒ page 198* *.*

1J0 601 025 J, 1J0 601 025 S - Wheel and tyre combination ⇒ page 198

Size:	7 J x 17
Wheel offset in mm:	38
Wheel load in kg:	580

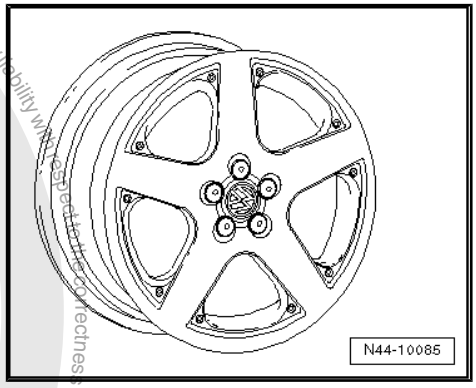

1J0 601 025 AB - Wheel and tyre combination ⇒ page 198

Size:	7 J x 17
Wheel offset in mm:	38
Wheel load in kg:	550

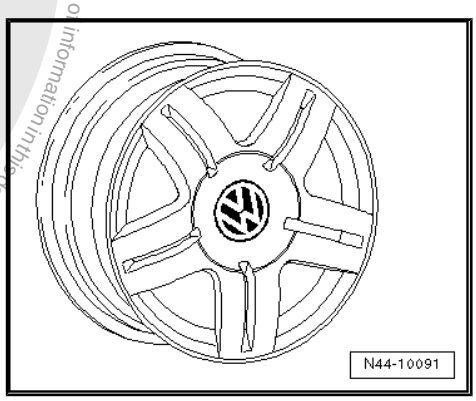

Protected by copyright. Copying for private or commercial purposes, in part or in whole, is not permitted unless authorised by Volkswagen AG. Volkswagen AG does not guarantee or accept any liability with respect to the correctness of information in this document. Copyright by Volkswagen AG.
satelettronica

1C0 601 025 B, 1C0 601 025 E - Wheel and tyre combination
⇒ page 198

Size:	7 J x 17
Wheel offset in mm:	38
Wheel load in kg:	550

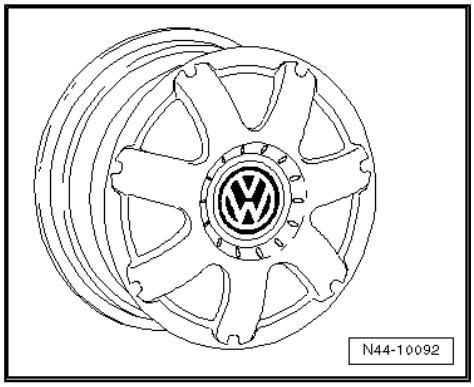

1C0 601 025 J - Wheel and tyre combination ⇒ page 198

Size:	7 J x 17
Wheel offset in mm:	38
Wheel load in kg:	550

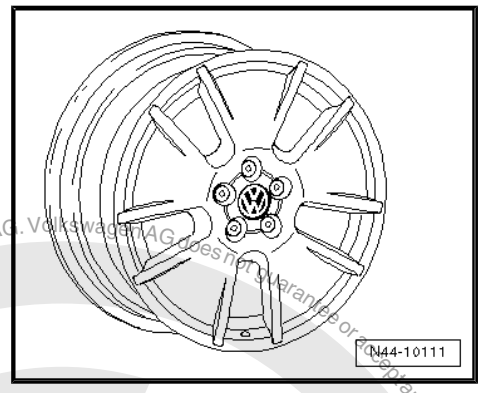

1C0 601 025 K, 1C0 601 025 Q - Wheel and tyre combination
⇒ page 198

Alloy disc-type wheels with exchangeable trim elements
⇒ page 60

Size:	7 J x 17
Wheel offset in mm:	38
Wheel load in kg:	550

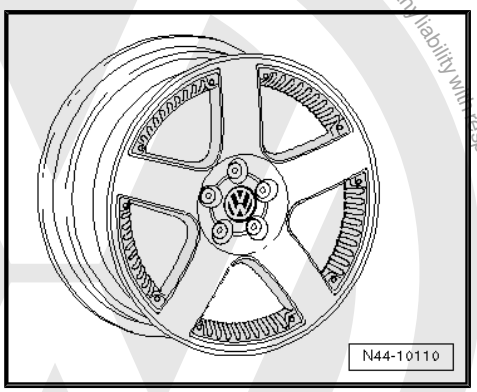

28.7.4 7 1/2 J x 18

The following wheels are permitted only if the stated conditions **⇒ page 203** **are fulfilled.**

> ⚠ **Caution**
>
> ***Observe the allocation of wheels and tyres to the respective engines, which are listed in the overview table*** ***⇒ page 198*** ***.***

Protected by copyright. Copying for private or commercial purposes, in part or in whole, is not permitted unless authorised by Volkswagen AG. Volkswagen AG does not guarantee or accept any liability with respect to the correctness of information in this document. Copyright by Volkswagen AG.
satelettronica

1J0 601 025 AM - Wheel and tyre combination ⇒ page 198

Size:	7½ J x 18
Wheel offset in mm:	38
Wheel load in kg:	475

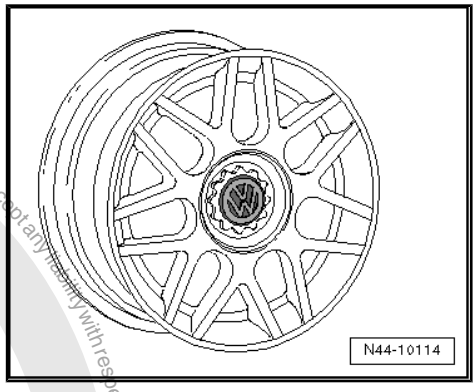

28.8 Conditions for fitting 17" and 18" wheels and tyres of Golf Anniversary GTI

Conditions for fitting 17" wheels and tyres

17" wheels with 225/45 R 17 tyres are possible only:

1. For vehicles from model year 2001.

2. If a steering box with reduced steering arm travel for vehicles with 17" sports running gear is installed.

PR No. of steering box:	QZ 3[7)]

7) Replacement part numbers ⇒ Electronic parts catalogue "ETKA"

3. If tyres with a maximum width of 218 mm are used.

4. If snow chains are not used.

Conditions for fitting 18" wheels and tyres

These vehicles are equipped as standard with a steering gear having reduced steering arm travel and sports running gear. These components cannot be retrofitted on vehicles which were not originally equipped with them.

Maximum width for 17" and 18" tyres

If a vehicle is retrofitted with 17" or 18" tyres or if existing 17" or 18" tyres are renewed, use only tyres which do not exceed the maximum width -a- during use [8)].

Dimension -a- for 17" tyres: 218 mm

Dimension -a- for 18" tyres: 225 mm

8) 1) The measured width of the tyre including lettering fitted on an appropriate wheel at the specified pressure.

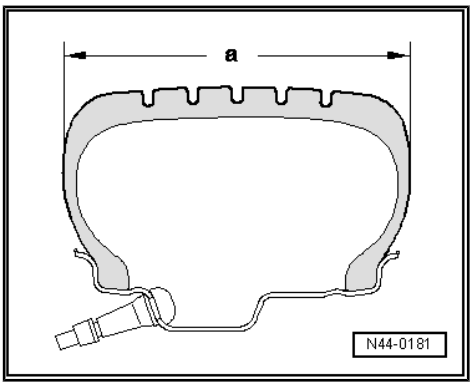

If wider tyres are used, under certain circumstances, the tyres may contact the front axle and the bodywork while the car is being driven.

Protected by copyright. Copyright by Volkswagen AG. Volkswagen AG does not guarantee or accept any liability with respect to the correctness of information in this document. Copyright by Volkswagen AG. Reproduction, in whole or in part, is not permitted unless authorised by Volkswagen AG.
satelettronica

Protected by copyright. Copyright by Volkswagen AG. Volkswagen AG does not guarantee or accept any liability with respect to the correctness of information in this document. Copyright by Volkswagen AG. Protected by copyright. Copying, processing and distribution, in whole or in part, is not permitted unless authorised by Volkswagen AG.

29 Golf model year 2004 to model year 2009

General

Volkswagen vehicles are built according to the latest findings in safety engineering. To keep it that way, we recommend the use of only genuine Volkswagen spare parts. You can recognise this by the VW Audi logo and by the part number. It has been established that these parts are reliable, safe and suitable.

Despite constant appraisal of the market, we cannot assess other products on these points, even when in isolated cases they have been passed by official inspectors or have been granted official approval. Therefore, we cannot, of course, assume any liability if these products are installed.

> ⚠ **WARNING**
>
> *The products from Volkswagen genuine parts and Votex genuine accessories may differ in fitting requirements, torque specifications and so on.*
>
> *Always follow the respective fitting and operating instructions.*

The wheel and tyre combinations or changes listed in the vehicle tables refer exclusively to Volkswagen Genuine wheels. Approval of wheel and tyre combinations or a change to wheels from the accessories trade is not possible with the parts certificate attached here.

> ⚠ **WARNING**
>
> *The fitting instructions and torque specifications for wheels from Votex genuine accessories may differ from those intended for wheels from Volkswagen genuine parts.*
>
> *Therefore, always observe the torque settings for the wheel bolts as well as the respective fitting and operating instructions.*

29.1 Golf, Golf 4Motion, type 1K model year 2004 to model year 2006

Appendix for parts certificate 2066/08

The parts certificate can be found on the Volkswagen ServiceNet under Technology; Guides; Wheels and Tyres Guide.

Type Approval No.: e1*2001/116*0242*00 to e1*2001/116*0242*15

Overview

Model engine output	Tyres	Tyre size	Wheel rim	Off-set in mm	Snow chains	Remarks
1.4l 55 kW; 1.4l 66 kW; petrol engines;	Standard tyres	195/65 R 15 91T	6 J x 15 ⇒ page 211	47	Yes	General information on: ◆ Winter tyres ⇒ page 15 ◆ Snow chains ⇒ page 18

satelettronica

Model engine output	Tyres	Tyre size	Wheel rim	Off-set in mm	Snow chains	Remarks
1.9l 66 kW TDI; 2.0l 55 kW SDI diesel engines	Modification	195/65 R 15 91H/V	6 J x 15 ⇒ page 211	47	Yes	Tyre makes recommended by Volkswagen: ◆ Summer tyres ⇒ page 644 ◆ All-season tyres ⇒ page 669 ◆ Winter tyres ⇒ page 682
		195/65 R 15 91T/H/V	6 1/2 J x 15 ⇒ page 212	50	Yes	
		205/60 R 15 91H/V	6 J x 15 ⇒ page 211	47	Yes	
		205/55 R 16 91H/V/W	6 1/2 J x 16 ⇒ page 213	50	No	
		225/45 R 17 91H/V/W	7 J x 17 ⇒ page 218	54	No	
		225/45 R 17 91H/V/W	7 1/2 J x 17 ⇒ page 220	51	No	
		225/40 R 18 92Y* ⇒ page 205	7 1/2 J x 18 ⇒ page 221	51	No	* 225/40 R 18 92Y tyres on 7 1/2 J x 18 rims with an offset of 51 are permitted only on vehicles with sports running gear and rear axle camber of -1°45'!
	Winter tyres	195/65 R 15 91Q/T/H	6 J x 15 ⇒ page 211	47	Yes	
		205/55 R 16 91Q/T/H	6 J x 16 ⇒ page 213	50	Yes	
1.6l 75 kW; 1.6l 85 kW; petrol engines; 1.9l 77 kW TDI diesel engine	Standard tyres	195/65 R 15 91H	6 J x 15 ⇒ page 211	47	Yes	
	Modification	195/65 R 15 91V	6 J x 15 ⇒ page 211	47	Yes	
		195/65 R 15 91H/V	6 1/2 J x 15 ⇒ page 212	50	Yes	
		205/60 R 15 91H/V	6 J x 15 ⇒ page 211	47	Yes	
		205/55 R 16 91H/V/W	6 1/2 J x 16 ⇒ page 213	50	No	
		225/45 R 17 91H/V/W	7 J x 17 ⇒ page 218	54	No	

Copyright by Volkswagen AG. Protected by copyright. Copying for private or commercial purposes, in part or in whole, is not permitted unless authorised by Volkswagen AG. Volkswagen AG does not guarantee or accept any liability with respect to the correctness of information in this document.

satelettronica

Model engine output	Tyres	Tyre size	Wheel rim	Off-set in mm	Snow chains	Remarks
		225/45 R 17 91H/V/W	7 1/2 J x 17 ⇒ page 220	51	No	
		225/40 R 18 92Y* ⇒ page 205	7 1/2 J x 18 ⇒ page 221	51	No	
	Winter tyres	195/65 R 15 91Q/T/H	6 J x 15 ⇒ page 211	47	Yes	
		205/55 R 16 91Q/T/H	6 J x 16 ⇒ page 213	50	Yes	
2.0l 110 kW; petrol engine	Standard tyres	205/55 R 16 91V	6 1/2 J x 16 ⇒ page 213	50	No	
2.0l 100 kW TDI; 2.0l 103 kW TDI; diesel engines	Modification	195/65 R 15 91V	6 J x 15 ⇒ page 211	47	Yes	
		195/65 R 15 91V	6 1/2 J x 15 ⇒ page 212	50	Yes	
		205/60 R 15 91V	6 J x 15 ⇒ page 211	47	Yes	
		205/55 R 16 91W	6 1/2 J x 16 ⇒ page 213	50	No	
		225/45 R 17 91V/W	7 J x 17 ⇒ page 218	54	No	
		225/45 R 17 91V/W	7 1/2 J x 17 ⇒ page 220	51	No	
		225/40 R 18 92Y* ⇒ page 205	7 1/2 J x 18 ⇒ page 221	51	No	
	Winter tyres	195/65 R 15 91Q/T/H	6 J x 15 ⇒ page 211	47	Yes	
		205/55 R 16 91Q/T/H	6 J x 16 ⇒ page 213	50	Yes	
1.4l 125 kW; petrol engine	Standard tyres	205/55 R 16 91V	6 1/2 J x 16 ⇒ page 213	50	No	
2.0l 125 kW TDI; diesel engine	Modification	225/45 R 17 91V/W	7 J x 17 ⇒ page 218	54	No	
		225/40 R 18 92Y* ⇒ page 205	7 1/2 J x 18 ⇒ page 221	51	No	
	Winter tyres	205/55 R 16 91Q/T/H	6 J x 16 ⇒ page 213	50	Yes	

Protected by copyright. Copying for private or commercial purposes, in part or in whole, is not permitted unless authorised by Volkswagen AG. Volkswagen AG does not guarantee or accept any liability with respect to the correctness of information in this document. Copyright by Volkswagen AG.

satelettronica

Tyre inflation pressures are located on a sticker in the fuel tank flap or in ⇒ Maintenance ; Booklet ; Check tyres: condition, profile, inflation pressure, depth of tread .

29.2 Golf, Golf 4Motion, type 1K model year 2007 to model year 2009

Appendix for parts certificate 2066/08

The parts certificate can be found on the Volkswagen ServiceNet under Technology; Guides; Wheels and Tyres Guide.

Type Approval No.: e1*2001/116*0242*16 to e1*2001/116*0242*24

Overview

Model engine output	Tyres	Tyre size	Wheel rim	Off-set in mm	Snow chains	Remarks
1.4l 55 kW; 1.4l 59 kW; 1.4l 66 kW; 1.6l 75 kW; petrol engines	Standard tyres	195/65 R 15 91T	6 J x 15 ⇒ page 211	47	Yes	General information on: ◆ Winter tyres ⇒ page 15 ◆ Snow chains ⇒ page 18
1.9l 66 kW TDI; 2.0l 55 kW SDI; 1.9l 77 kW TDI; diesel engines	Modification	195/65 R 15 91H/V	6 J x 15 ⇒ page 211	47	Yes	Tyre makes recommended by Volkswagen: ◆ Summer tyres ⇒ page 644 ◆ All-season tyres ⇒ page 669 ◆ Winter tyres ⇒ page 682
		195/65 R 15 91T/H/V	$6^1/_2$ J x 15 ⇒ page 212	50	Yes	
		205/60 R 15 91T/H/V	6 J x 15 ⇒ page 211	47	Yes	
		205/55 R 16 91T/H/V/W	$6^1/_2$ J x 16 ⇒ page 213	50	No	
		225/45 R 17 91T/H/V/W	7 J x 17 ⇒ page 218	54	No	
		225/45 R 17 91T/H/V/W * ⇒ page 207	$7^1/_2$ J x 17 ⇒ page 220	51	No	* 225/45 R 17 91T/H/V/W tyres on $7^1/_2$ J x 17 rims with an offset of 51 are permitted only on vehicles with sports running gear!
		225/40 R 18 92Y** ⇒ page 207	$7^1/_2$ J x 18 ⇒ page 221	51	No	** 225/40 R 18 92Y tyres on $7^1/_2$ J x 18 rims with an offset of of 51 are permitted only on vehicles with sports running gear and rear axle camber of -1°45'!

Protected by copyright. Copying for private or commercial purposes, in part or in whole, is not permitted unless authorised by Volkswagen AG. Volkswagen AG does not guarantee or accept any liability with respect to the correctness of information in this document. Copyright by Volkswagen AG.

satelettronica

Model engine output	Tyres	Tyre size	Wheel rim	Off-set in mm	Snow chains	Remarks
	Winter tyres	195/65 R 15 91Q/T/H	6 J x 15 ⇒ page 211	47	Yes	
		205/55 R 16 91Q/T/H	6 J x 16 ⇒ page 213	50	Yes	
1.4l 90 kW petrol engine with manual gearbox	Standard tyres	195/65 R 15 91H	6 J x 15 ⇒ page 211	47	Yes	
1.6l 85 kW; 1.4l 103 kW petrol engines;	Modification	195/65 R 15 91V	6 J x 15 ⇒ page 211	47	Yes	
		195/65 R 15 91H/V	6 1/2 J x 15 ⇒ page 212	50	Yes	
		205/60 R 15 91H/V	6 J x 15 ⇒ page 211	47	Yes	
		205/55 R 16 91H/V/W	6 1/2 J x 16 ⇒ page 213	50	No	
		225/45 R 17 91H/V/W	7 J x 17 ⇒ page 218	54	No	
		225/45 R 17 91H/V/W * ⇒ page 207	7 1/2 J x 17 ⇒ page 220	51	No	
		225/40 R 18 92Y** ⇒ page 207	7 1/2 J x 18 ⇒ page 221	51	No	
	Winter tyres	195/65 R 15 91Q/T/H	6 J x 15 ⇒ page 211	47	Yes	
		205/55 R 16 91Q/T/H	6 J x 16 ⇒ page 213	50	Yes	
1.4l 90 kW petrol engine with dual clutch gearbox	Standard tyres	195/65 R 15 91H	6 J x 15 ⇒ page 211	47	Yes	
	Modification	195/65 R 15 91V/W	6 J x 15 ⇒ page 211	47	Yes	
		195/65 R 15 91H/V/W	6 1/2 J x 15 ⇒ page 212	50	Yes	
		205/55 R 16 91H/V/W	6 1/2 J x 16 ⇒ page 213	50	No	
		225/45 R 17 91H/V/W * ⇒ page 207	7 1/2 J x 17 ⇒ page 220	51	No	
	Winter tyres	195/65 R 15 91Q/T/H	6 J x 15 ⇒ page 211	47	Yes	

satelettronica
Protected by copyright. Copyright by Volkswagen AG. Volkswagen AG does not guarantee or accept any liability with respect to the correctness of information in this document. Copying for private or commercial purposes, in part or in whole, is not permitted unless authorised by Volkswagen AG.

Model engine output	Tyres	Tyre size	Wheel rim	Off-set in mm	Snow chains	Remarks
		205/55 R 16 91Q/T/H	6 J x 16 ⇒ page 213	50	Yes	
2.0l 110 kW petrol engine with front-wheel drive and automatic gearbox 2.0l 110 kW petrol engine 4MOTION 2.0l 100 kW TDI; 2.0l 103 kW TDI; diesel engines	Standard tyres	205/55 R 16 91H	6 1/2 J x 16 ⇒ page 213	50	No	
	Modification	195/65 R 15 91H/V	6 J x 15 ⇒ page 211	47	Yes	
		195/65 R 15 91H/V	6 1/2 J x 15 ⇒ page 212	50	Yes	
		205/60 R 15 91H/V	6 J x 15 ⇒ page 211	47	Yes	
		205/55 R 16 91H/V/W	6 1/2 J x 16 ⇒ page 213	50	No	
		225/45 R 17 91H/V/W	7 J x 17 ⇒ page 218	54	No	
		225/45 R 17 91H/V/W * ⇒ page 207	7 1/2 J x 17 ⇒ page 220	51	No	
		225/40 R 18 92Y** ⇒ page 207	7 1/2 J x 18 ⇒ page 221	51	No	
	Winter tyres	195/65 R 15 91Q/T/H	6 J x 15 ⇒ page 211	47	Yes	
		205/55 R 16 91Q/T/H	6 J x 16 ⇒ page 213	50	Yes	
2.0l 110 kW; petrol engine with front-wheel drive and manual gearbox	Standard tyres	205/55 R 16 91V	6 1/2 J x 16 ⇒ page 213	50	No	
	Modification	195/65 R 15 91V	6 J x 15 ⇒ page 211	47	Yes	
		195/65 R 15 91V	6 1/2 J x 15 ⇒ page 212	50	Yes	
		205/60 R 15 91V	6 J x 15 ⇒ page 211	47	Yes	
		205/55 R 16 91V/W	6 1/2 J x 16 ⇒ page 213	50	No	

satelettronica

Model engine output	Tyres	Tyre size	Wheel rim	Off-set in mm	Snow chains	Remarks
		225/45 R 17 91V/W	7 J x 17 ⇒ page 218	54	No	
		225/45 R 17 91V/W * ⇒ page 207	7 1/2 J x 17 ⇒ page 220	51	No	
		225/40 R 18 92Y** ⇒ page 207	7 1/2 J x 18 ⇒ page 221	51	No	
	Winter tyres	195/65 R 15 91Q/T/H	6 J x 15 ⇒ page 211	47	Yes	
		205/55 R 16 91Q/T/H	6 J x 16 ⇒ page 213	50	Yes	
1.4l 125 kW; petrol engine	Standard tyres	205/55 R 16 91V	6 1/2 J x 16 ⇒ page 213	50	No	
	Modification	225/45 R 17 91V/W	7 J x 17 ⇒ page 218	54	No	
		225/45 R 17 91V/W * ⇒ page 207	7 1/2 J x 17 ⇒ page 220	51	No	
		225/40 R 18 92Y** ⇒ page 207	7 1/2 J x 18 ⇒ page 221	51	No	
	Winter tyres	205/55 R 16 91Q/T/H	6 J x 16 ⇒ page 213	50	Yes	
2.0l 125 kW TDI; diesel engine	Standard tyres	205/55 R 16 91V	6 1/2 J x 16 ⇒ page 213	50	No	
	Modification	225/45 R 17 91V/W	7 J x 17 ⇒ page 218	54	No	
		225/40 R 18 92Y** ⇒ page 207	7 1/2 J x 18 ⇒ page 221	51	No	
	Winter tyres	205/55 R 16 91Q/T/H	6 J x 16 ⇒ page 213	50	Yes	
		205/50 R 17 93Q/T/H	6 J x 17 ⇒ page 217	48.5	Yes*** ⇒ page 210	*** Only snow chains with fine links of no more than 8 mm may be used ⇒ page 211 .

Tyre inflation pressures are located on a sticker in the fuel tank flap or in ⇒ Maintenance ; Booklet ; Check tyres: condition, profile, inflation pressure, depth of tread .

Protected by copyright. Copying for private or commercial purposes, in part or in whole, is not permitted unless authorised by Volkswagen AG. Volkswagen AG does not guarantee or accept any liability with respect to the correctness of information in this document. Copyright by Volkswagen AG.
sateletronica

Approved snow chains for 6 J x 17 offset 48.5 wheel rim

The following snow chains are only permissible in combination with the adjacent wheel and tyre combination!

Chain manufacturer Item no.	Accessory part number	Tyre size	Wheel rim	Part no.
Ottinger 100 956	-	205/50 R 17 93Q/T/H	6 J x 17 offset 48.5	1K0 601 025 N

29.3 Wheel allocation for Golf, Golf 4Motion, type 1K model year 2004 to model year 2009

Explanation of information on wheels ⇒ page 59

Torque specifications for wheel bolts ⇒ Running gear, axles, steering; Rep. gr. 44 ; Torque specifications for fitting wheels

Pitch circle diameter:	112 mm
Number of wheel bolt holes:	5

29.3.1 6 J x 15

Caution

Observe the allocation of wheels and tyres to the respective engines, which are listed in the overview table ⇒ page 204 .

1K0 601 027 C, 1K0 601 027 H - Wheel and tyre combination ⇒ page 204

Size:	6 J x 15
Wheel offset in mm:	47
Wheel load in kg:	615

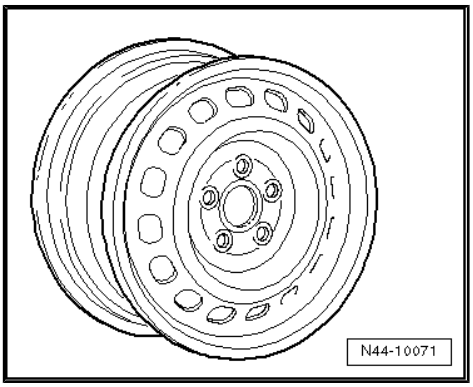

1K0 601 027 T - Wheel and tyre combination ⇒ page 204

Size:	6 J x 15
Wheel offset in mm:	47
Wheel load in kg:	615

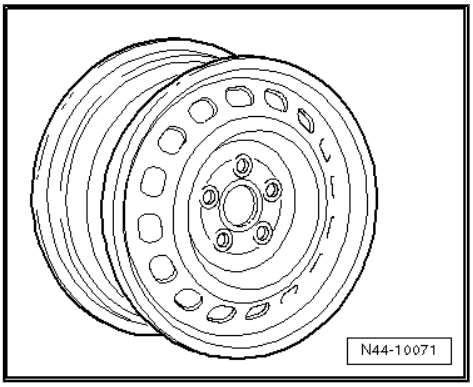

Protected by copyright. Copyright by Volkswagen AG. Copyright by Volkswagen AG. Volkswagen AG does not guarantee or accept any liability with respect to the correctness of information in this document. Copying for private or commercial purposes, in part or in whole, is not permitted unless authorised by Volkswagen AG.
satelettronica

2K0 601 027 - Wheel and tyre combination ⇒ page 204

Size:	6 J x 15
Wheel offset in mm:	47
Wheel load in kg:	650

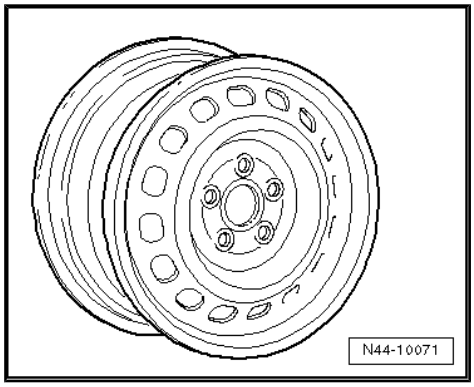

29.3.2 6$^1/_2$ J x 15

Caution

Observe the allocation of wheels and tyres to the respective engines, which are listed in the overview table ⇒ page 204 *.*

1K0 601 025 A - Wheel and tyre combination ⇒ page 205

Size:	6$^1/_2$ J x 15
Wheel offset in mm:	50
Wheel load in kg:	600

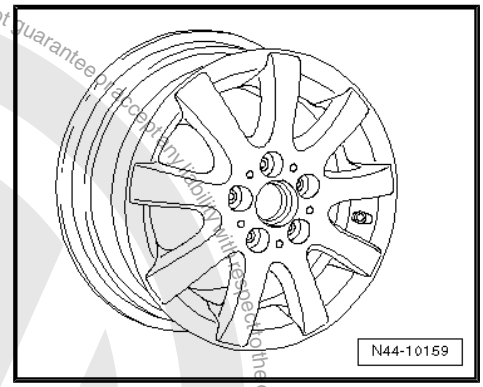

1K0 601 025 AK - Wheel and tyre combination ⇒ page 205

Size:	6$^1/_2$ J x 15
Wheel offset in mm:	50
Wheel load in kg:	600

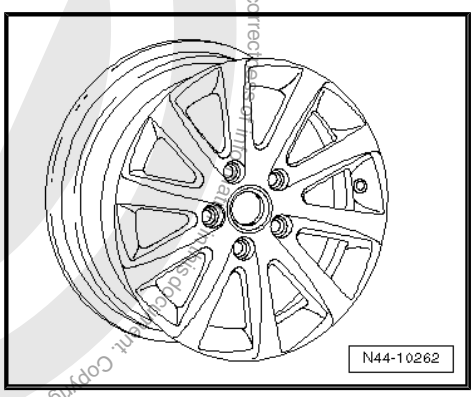

1K0 601 025 AQ - Wheel and tyre combination ⇒ page 205

Size:	6$^1/_2$ J x 15
Wheel offset in mm:	50
Wheel load in kg:	600

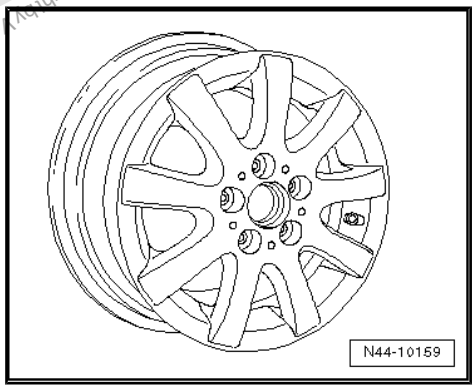

Volkswagen AG. Volkswagen AG does not guarantee the correctness of this data. Copyright by Volkswagen AG.
Protected by copyright. Copying for private or commercial purposes, in part or in whole, is not permitted unless authorised by Volkswagen AG.
satelettronica

1K0 601 025 CA - Wheel and tyre combination ⇒ page 205

Size:	6 1/2 J x 15
Wheel offset in mm:	50
Wheel load in kg:	600

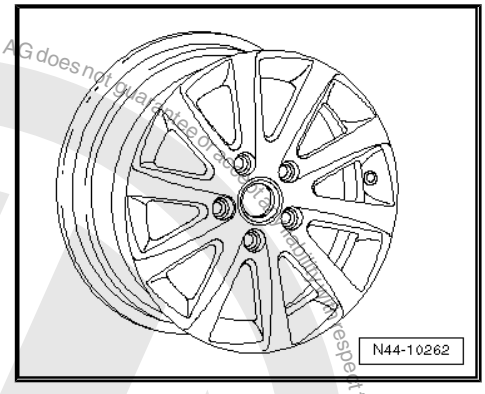

29.3.3 6 J x 16

Caution

Observe the allocation of wheels and tyres to the respective engines, which are listed in the overview table ⇒ page 204 *.*

Winter wheels

8P0 601 027 - Wheel and tyre combination ⇒ page 205

Size:	6 J x 16
Wheel offset in mm:	50
Wheel load in kg:	600

Use the following wheel bolt caps for wheel bolts:

- 1K0.601.173 (4 per wheel)
- 1K0.601.173.A (1 per wheel)

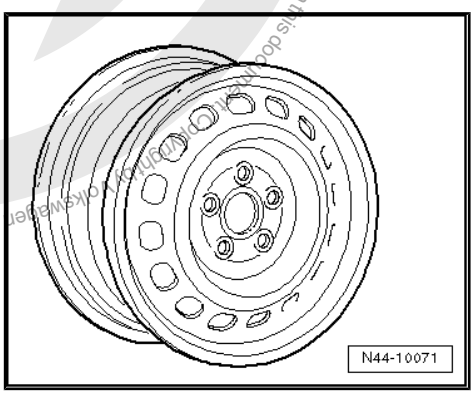

1K0 601 025 Q - Wheel and tyre combination ⇒ page 205

Size:	6 J x 16 EH2 ⇒ page 59
Wheel offset in mm:	50
Wheel load in kg:	615

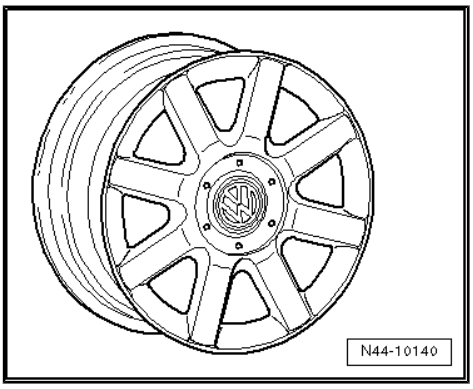

29.3.4 6 1/2 J x 16

Caution

Observe the allocation of wheels and tyres to the respective engines, which are listed in the overview table ⇒ page 204 *.*

Protected by copyright. Copying for private or commercial purposes, in part or in whole, is not permitted unless authorised by Volkswagen AG. Volkswagen AG does not guarantee or accept any liability with respect to the correctness of information in this document. Copyright by Volkswagen AG.
satelettronica

1K0 601 027 A - Wheel and tyre combination ⇒ page 205

Size:	$6^1/_2$ J x 16
Wheel offset in mm:	50
Wheel load in kg:	615

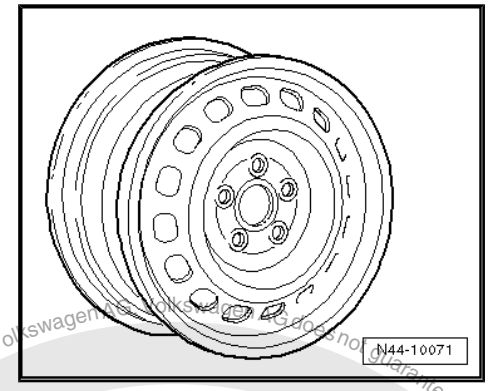

1K0 601 027 J, 1K0 601 027 K - Wheel and tyre combination ⇒ page 205

Size:	$6^1/_2$ J x 16
Wheel offset in mm:	50
Wheel load in kg:	615

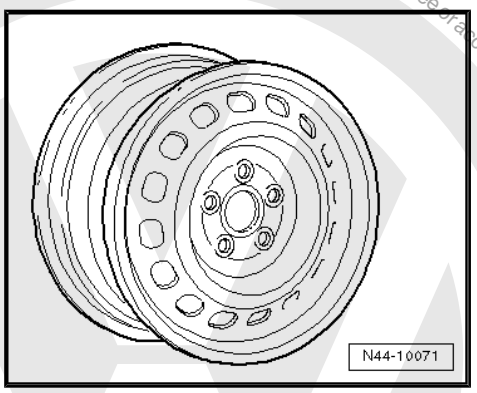

1K0 601 025 AJ - Wheel and tyre combination ⇒ page 205

Size:	$6^1/_2$ J x 16
Wheel offset in mm:	50
Wheel load in kg:	615

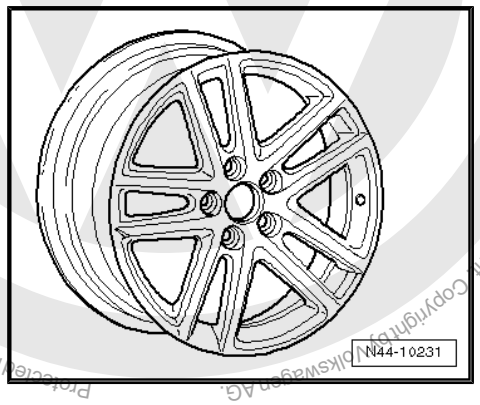

1K0 601 025 BC - Wheel and tyre combination ⇒ page 205

Size:	$6^1/_2$ J x 16
Wheel offset in mm:	50
Wheel load in kg:	615

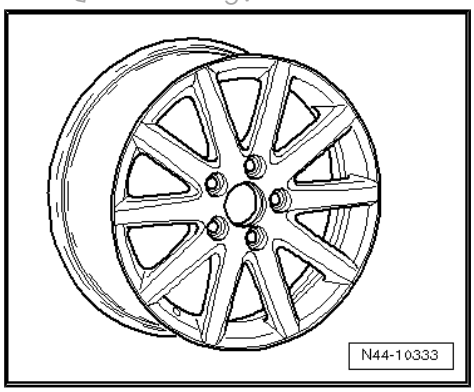

Protected by copyright. Copying for private or commercial purposes, in part or in whole, is not permitted unless authorised by Volkswagen AG. Volkswagen AG does not guarantee or accept any liability with respect to the correctness of information in this document. Copyright by Volkswagen AG.
satelettronica

1K0 601 025 BM - Wheel and tyre combination ⇒ page 205

Size:	$6^1/_2$ J x 16
Wheel offset in mm:	50
Wheel load in kg:	615

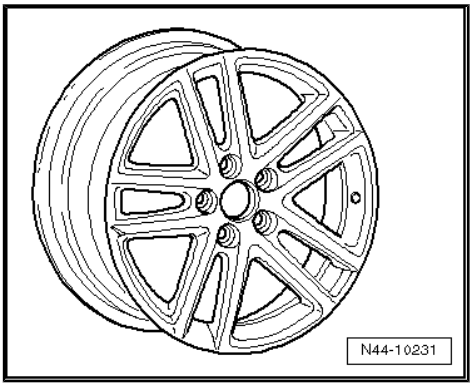

1K0 601 025 BR - Wheel and tyre combination ⇒ page 205

Size:	$6^1/_2$ J x 16
Wheel offset in mm:	50
Wheel load in kg:	615

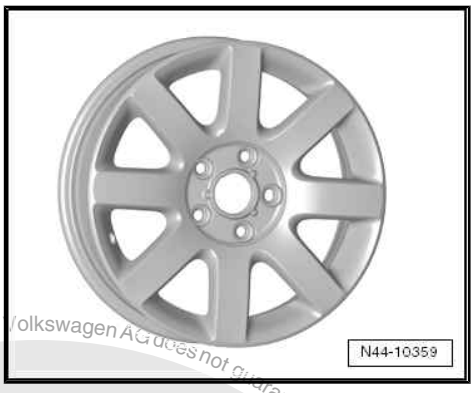

1K0 601 025 BS - Wheel and tyre combination ⇒ page 205

Size:	$6^1/_2$ J x 16
Wheel offset in mm:	50
Wheel load in kg:	615

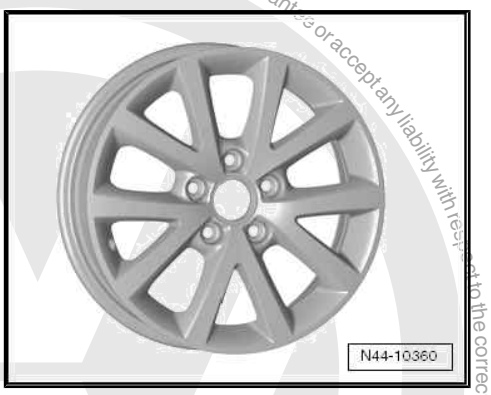

1K0 601 025 CB - Wheel and tyre combination ⇒ page 205

Size:	$6^1/_2$ J x 16
Wheel offset in mm:	50
Wheel load in kg:	615

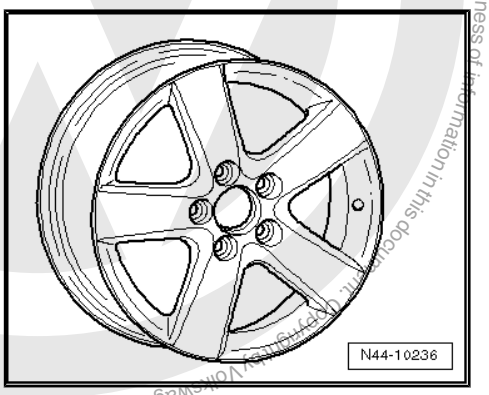

Protected by copyright. Copying for private or commercial purposes, in part or in whole, is not permitted unless authorised by Volkswagen AG. Volkswagen AG does not guarantee or accept any liability with respect to the correctness of the information in this document. Copyright by Volkswagen AG.
satelettronica

1K0 601 025 CG - Wheel and tyre combination ⇒ page 205

Size:	$6^1/_2$ J x 16
Wheel offset in mm:	50
Wheel load in kg:	615

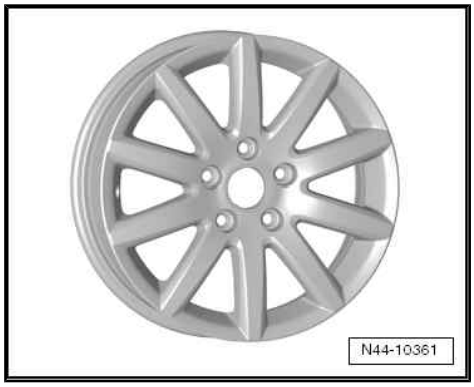

1T0 601 025 C - Wheel and tyre combination ⇒ page 205

Size:	$6^1/_2$ J x 16
Wheel offset in mm:	50
Wheel load in kg:	615

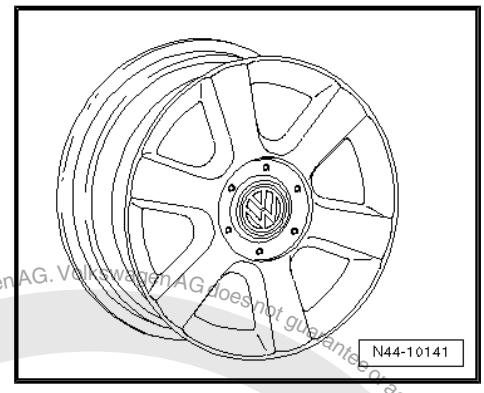

1K0 601 025 F - Wheel and tyre combination ⇒ page 205

Size:	$6^1/_2$ J x 16
Wheel offset in mm:	50
Wheel load in kg:	615

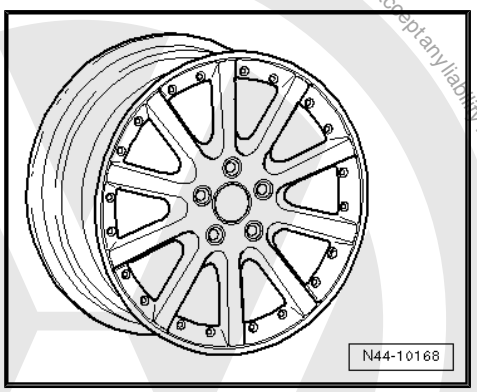

1K0 601 025 P - Wheel and tyre combination ⇒ page 205

Size:	$6^1/_2$ J x 16
Wheel offset in mm:	50
Wheel load in kg:	615

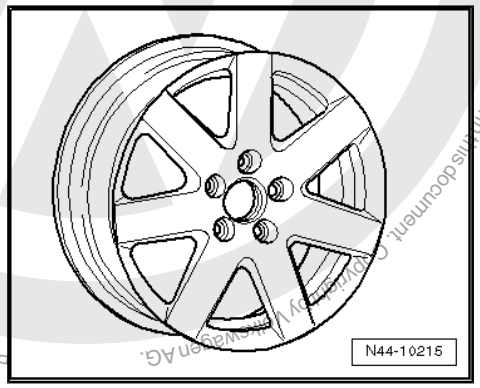

Protected by copyright. Copying for private or commercial purposes, in part or in whole, is not permitted unless authorised by Volkswagen AG. Volkswagen AG does not guarantee or accept any liability with respect to the correctness of information in this document. Copyright by Volkswagen AG.
satelettronica

1K0 601 025 R - Wheel and tyre combination ⇒ page 205

Size:	$6^1/_2$ J x 16
Wheel offset in mm:	50
Wheel load in kg:	615

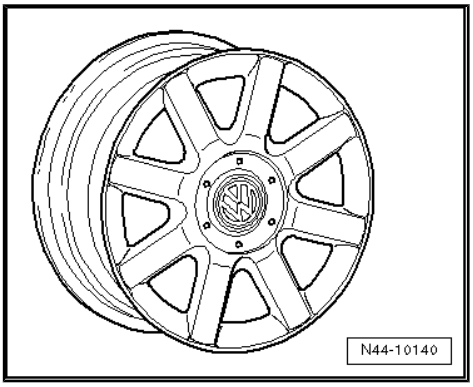

1T0 601 025 G, 1T0 601 025 K - Wheel and tyre combination ⇒ page 205

Size:	$6^1/_2$ J x 16
Wheel offset in mm:	50
Wheel load in kg:	615

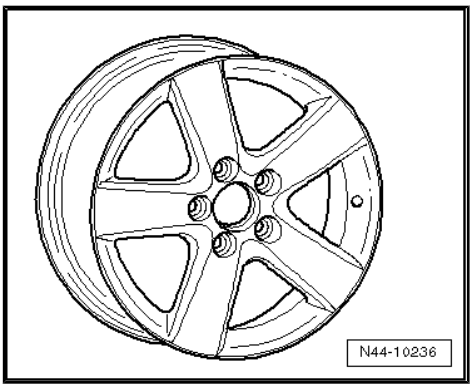

1T0 601 025 M - Wheel and tyre combination ⇒ page 205

Size:	$6^1/_2$ J x 16
Wheel offset in mm:	50
Wheel load in kg:	615

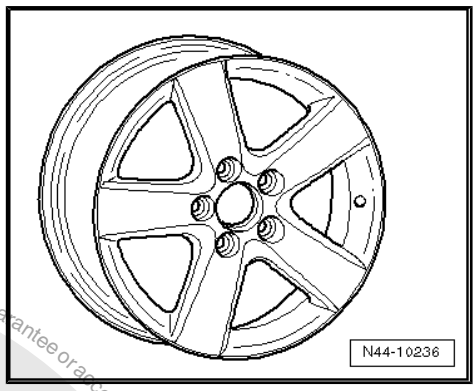

1T0 601 025 R - Wheel and tyre combination ⇒ page 205

Size:	$6^1/_2$ J x 16
Wheel offset in mm:	50
Wheel load in kg:	615

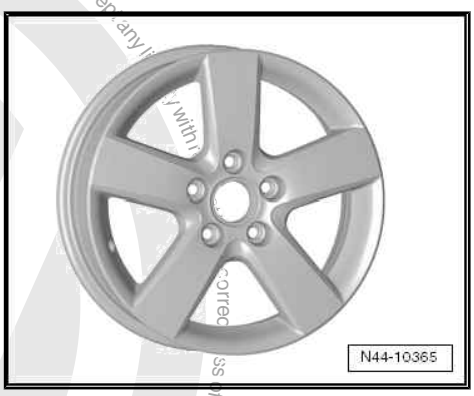

29.3.5 6 J x 17

Caution

Observe the allocation of wheels and tyres to the respective engines, which are listed in the overview table ⇒ page 204 *.*

Protected by copyright. Copyright by Volkswagen AG. Copying for private or commercial purposes, in part or in whole, is not permitted unless authorised by Volkswagen AG. Volkswagen AG does not guarantee or accept any liability with respect to the correctness of information in this document.
satelettronica

Winter wheel

1K0 601 025 N - Wheel and tyre combination ⇒ page 210

Size:	6 J x 17
Wheel offset in mm:	48,5
Wheel load in kg:	615

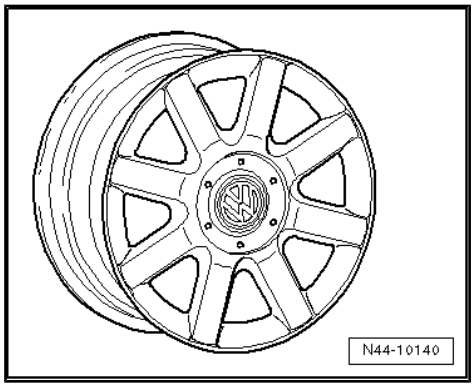

29.3.6 7 J x 17

Caution

Observe the allocation of wheels and tyres to the respective engines, which are listed in the overview table ⇒ page 204 *.*

1K0 601 025 B - Wheel and tyre combination ⇒ page 205

Size:	7 J x 17
Wheel offset in mm:	54
Wheel load in kg:	615

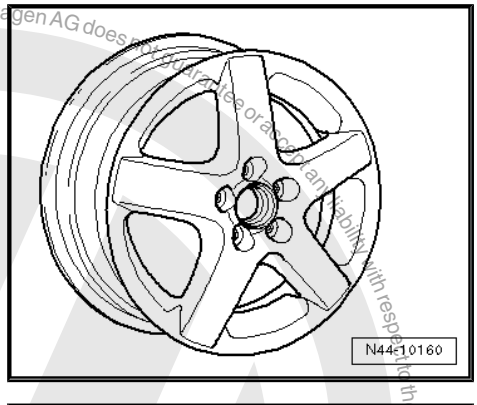

1K0 601 025 C - Wheel and tyre combination ⇒ page 205

Size:	7 J x 17
Wheel offset in mm:	54
Wheel load in kg:	615

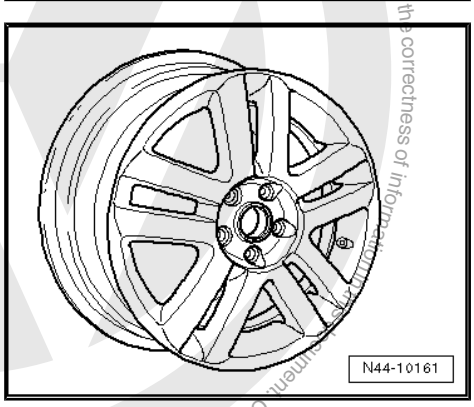

Protected by copyright. Copying for private or commercial purposes, in part or in whole, is not permitted unless authorised by Volkswagen AG. Volkswagen AG does not guarantee or accept any liability with respect to the correctness of information. Copyright by Volkswagen AG.
satelettronica

1K0 601 025 J - Wheel and tyre combination ⇒ page 205

Size:	7 J x 17
Wheel offset in mm:	54
Wheel load in kg:	615

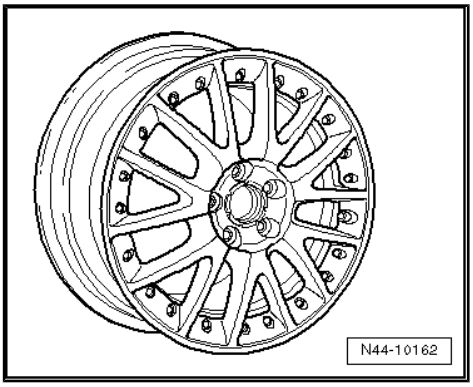

1K0 601 025 K - Wheel and tyre combination ⇒ page 205

Size:	7 J x 17
Wheel offset in mm:	54
Wheel load in kg:	615

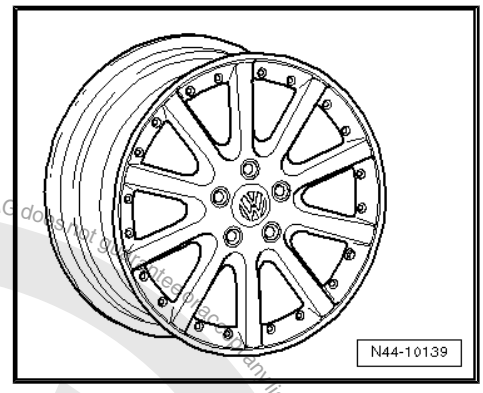

1K0 601 025 M - Wheel and tyre combination ⇒ page 205

Size:	7 J x 17
Wheel offset in mm:	54
Wheel load in kg:	615

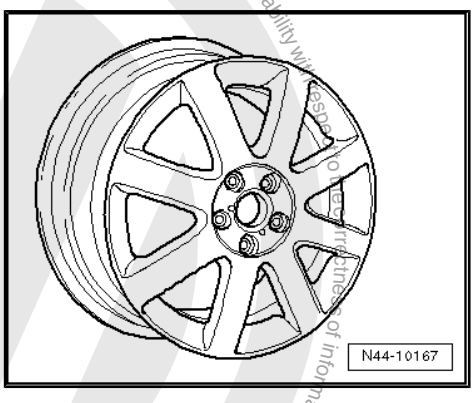

1K0 601 025 T - Wheel and tyre combination ⇒ page 205

Size:	7 J x 17
Wheel offset in mm:	54
Wheel load in kg:	615

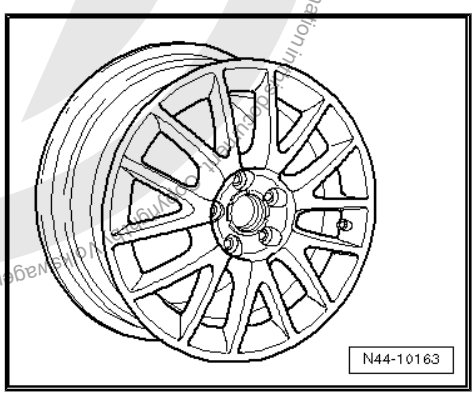

Protected by copyright. Copying for private or commercial purposes, in part or in whole, is not permitted unless authorised by Volkswagen AG. Volkswagen AG does not give any guarantee or assumption of liability with respect to the correctness of information.
Copyright by Volkswagen AG.
satelettronica

1K0 601 025 AF - Wheel and tyre combination ⇒ page 205

Size:	7 J x 17
Wheel offset in mm:	54
Wheel load in kg:	630

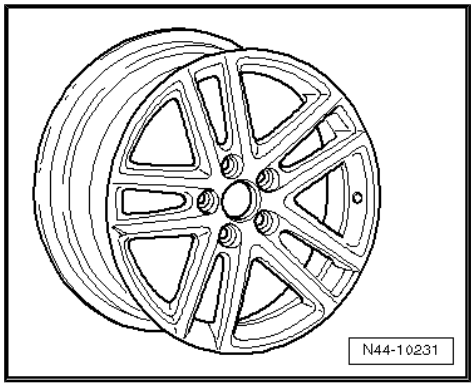

1K0 601 025 AE - Wheel and tyre combination ⇒ page 205

Size:	7 J x 17
Wheel offset in mm:	54
Wheel load in kg:	630

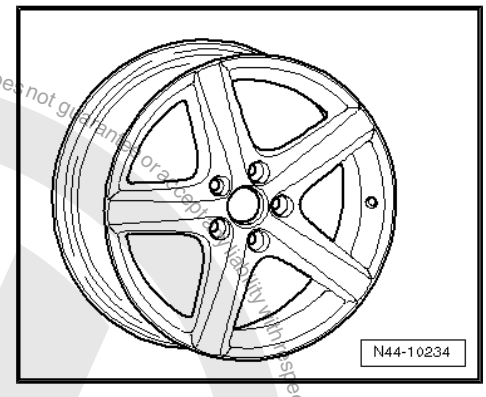

1K0 601 025 AN - Wheel and tyre combination ⇒ page 205

Size:	7 J x 17
Wheel offset in mm:	54
Wheel load in kg:	615

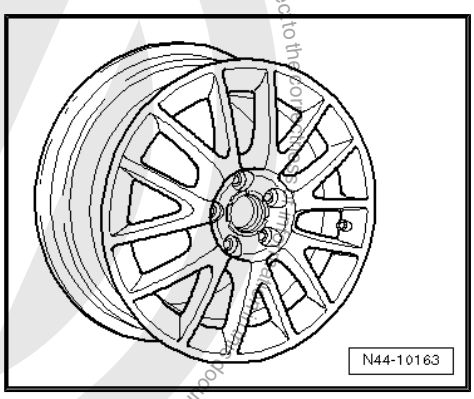

29.3.7 7 1/2 J x 17

Caution

Observe the allocation of wheels and tyres to the respective engines, which are listed in the overview table *⇒ page 204* *.*

1K0 601 025 AC - Wheel and tyre combination ⇒ page 205

Size:	7 1/2 J x 17
Wheel offset in mm:	51
Wheel load in kg:	615

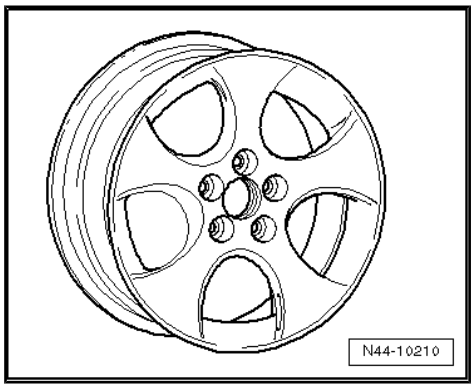

Protected by copyright. Copyright for private or commercial purposes, in part or in whole, is not permitted unless authorised by Volkswagen AG. Volkswagen AG does not guarantee or accept any liability with respect to the correctness of information. Copyright by Volkswagen AG.
satelettronica

Protected by copyright. Copying for private or commercial purposes, in part or in whole, is not permitted unless authorised by Volkswagen AG. Volkswagen AG does not guarantee or accept any liability with respect to the correctness of information in

1K0 601 025 BB - Wheel and tyre combination ⇒ page 205

Size:	$7^1/_2$ J x 17
Wheel offset in mm:	51
Wheel load in kg:	615

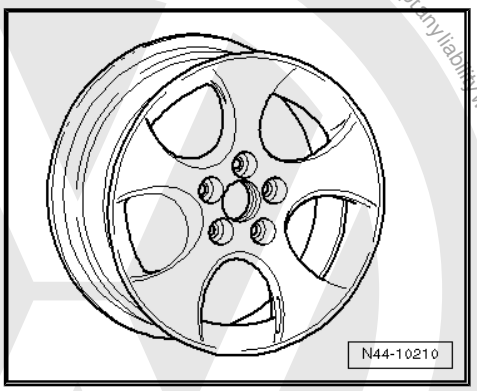

1K0 601 025 BK - Wheel and tyre combination ⇒ page 205

Size:	$7^1/_2$ J x 17
Wheel offset in mm:	51
Wheel load in kg:	615

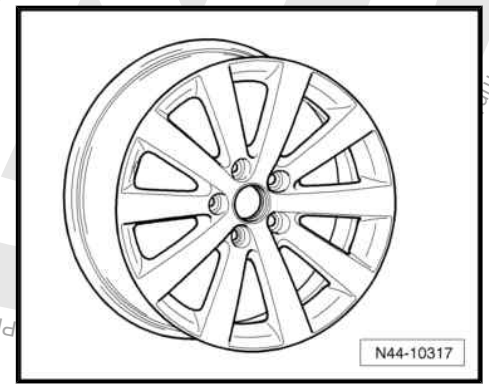

29.3.8 $7^1/_2$ J x 18

Caution

Observe the allocation of wheels and tyres to the respective engines, which are listed in the overview table ⇒ page 204 *.*

1K0 601 025 AD - Wheel and tyre combination ⇒ page 205

Only for vehicles with sports running gear and rear axle camber of -1°45'

Size:	$7^1/_2$ J x 18
Wheel offset in mm:	51
Wheel load in kg:	630

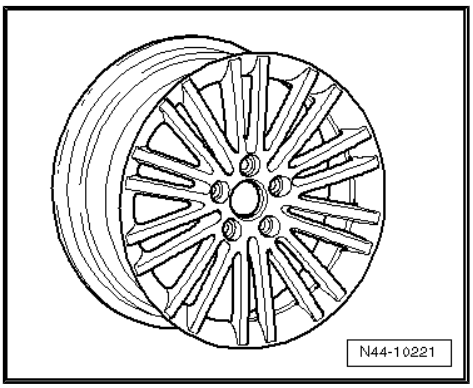

1K0 601 025 AH - Wheel and tyre combination ⇒ page 205

Only for vehicles with sports running gear and rear axle camber of -1°45'

Size:	$7^1/_2$ J x 18
Wheel offset in mm:	51
Wheel load in kg:	615

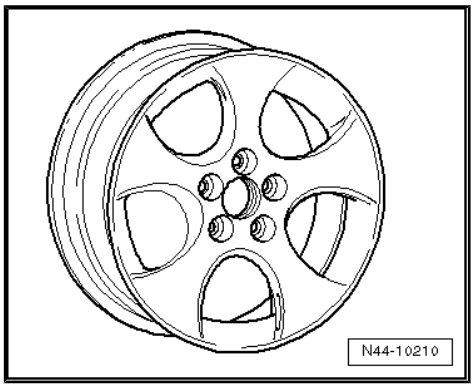

satelettronica

1K0 601 025 AG - Wheel and tyre combination ⇒ page 205

Only for vehicles with sports running gear and rear axle camber of -1°45'

Size:	$7^1/_2$ J x 18
Wheel offset in mm:	51
Wheel load in kg:	630

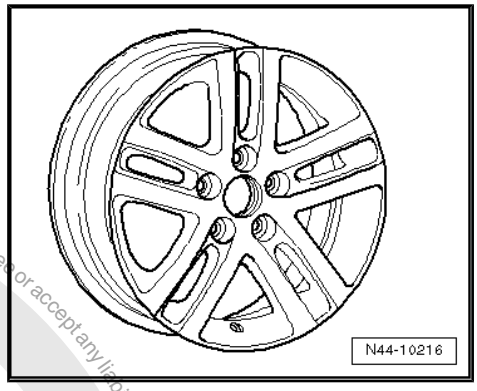

1K0 601 025 AM - Wheel and tyre combination ⇒ page 205

Only for vehicles with sports running gear and rear axle camber of -1°45'

Size:	$7^1/_2$ J x 18
Wheel offset in mm:	51
Wheel load in kg:	615

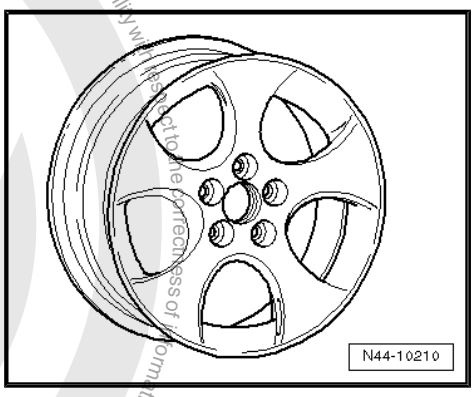

1K0 601 025 AT, 1K0 601 025 CC - Wheel and tyre combination ⇒ page 205

Only for vehicles with sports running gear and rear axle camber of -1°45'

Size:	$7^1/_2$ J x 18
Wheel offset in mm:	51
Wheel load in kg:	615

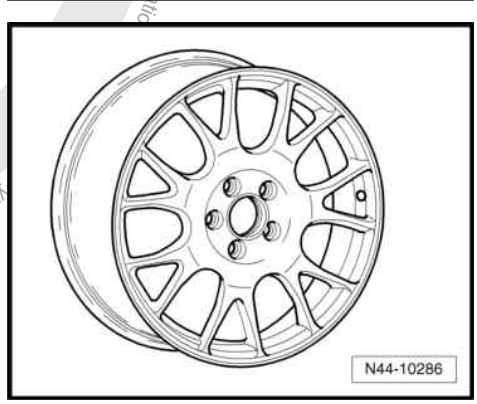

1K0 601 025 BA - Wheel and tyre combination ⇒ page 205

Only for vehicles with sports running gear and rear axle camber of -1°45'

Size:	$7^1/_2$ J x 18
Wheel offset in mm:	51
Wheel load in kg:	615

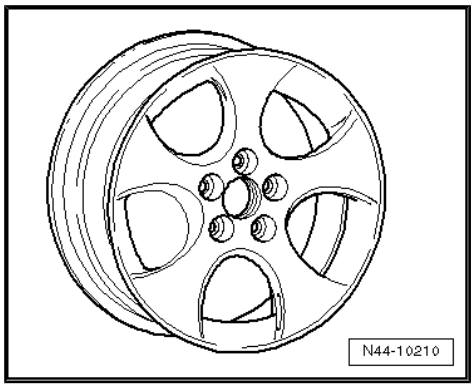

Protected by copyright. Copying for private or commercial purposes, in part or in whole, is not permitted unless authorised by Volkswagen AG. Volkswagen AG does not guarantee or accept any liability with respect to the correctness of information.
Copyright by Volkswagen AG.
satelettronica

1K0 601 025 BE - Wheel and tyre combination ⇒ page 205

Only for vehicles with sports running gear and rear axle camber of -1°45'

Size:	$7^1/_2$ J x 18
Wheel offset in mm:	51
Wheel load in kg:	615

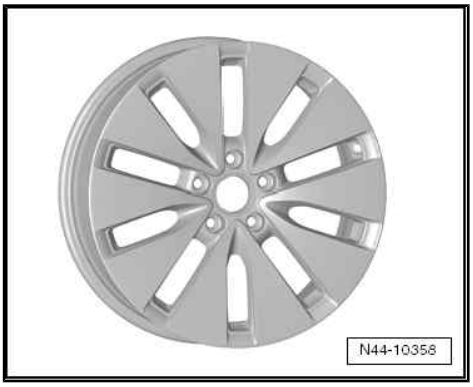

1K0 601 025 BL - Wheel and tyre combination ⇒ page 205

Only for vehicles with sports running gear and rear axle camber of -1°45'

Size:	$7^1/_2$ J x 18
Wheel offset in mm:	51
Wheel load in kg:	615

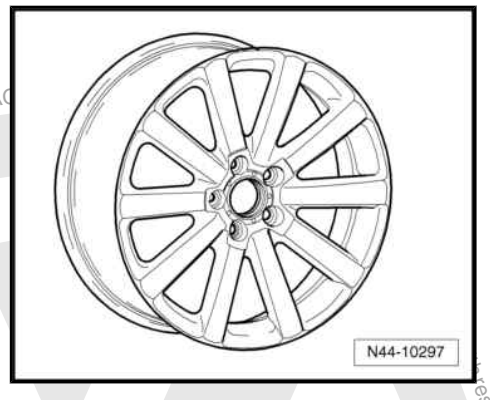

Protected by copyright. Copying for private or commercial purposes, in part or in whole, is not permitted unless authorised by Volkswagen AG.
Copyright by Volkswagen AG. No liability is accepted with respect to the correctness of information in this document.
satelettronica

30 Golf BlueMotion model year 2008 to model year 2009

General

Volkswagen vehicles are built according to the latest findings in safety engineering. To keep it that way, we recommend the use of only genuine Volkswagen spare parts. You can recognise this by the VW Audi logo and by the part number. It has been established that these parts are reliable, safe and suitable.

Despite constant appraisal of the market, we cannot assess other products on these points, even when in isolated cases they have been passed by official inspectors or have been granted official approval. Therefore, we cannot, of course, assume any liability if these products are installed.

> ⚠ **WARNING**
>
> *The products from Volkswagen genuine parts and Votex genuine accessories may differ in fitting requirements, torque specifications and so on.*
>
> *Always follow the respective fitting and operating instructions.*

The wheel and tyre combinations or changes listed in the vehicle tables refer exclusively to Volkswagen Genuine wheels. Approval of wheel and tyre combinations or a change to wheels from the accessories trade is not possible with the parts certificate attached here.

> ⚠ **WARNING**
>
> *The fitting instructions and torque specifications for wheels from Votex genuine accessories may differ from those intended for wheels from Volkswagen genuine parts.*
>
> *Therefore, always observe the torque settings for the wheel bolts as well as the respective fitting and operating instructions.*

30.1 Golf BlueMotion, type 1K model year 2008 to model year 2009

Appendix for parts certificate 2066/08

The parts certificate can be found on the Volkswagen ServiceNet under Technology; Guides; Wheels and Tyres Guide.

Type Approval No.: e1*2001/116*0242*22 to e1*2001/116*0242*24

Overview

Model engine output	Tyres	Tyre size	Wheel rim	Off-set in mm	Snow chains	Remarks
1.9l 77 kW TDI diesel engine	Standard tyres	195/65 R 15 91T	6 J x 15 ⇒ page 225	47	Yes	General information on: ◆ Winter tyres ⇒ page 15 ◆ Snow chains ⇒ page 18

Protected by copyright. Copying for private or commercial purposes, in part or in whole, is not permitted unless authorised by Volkswagen AG. Volkswagen AG does not guarantee or accept any liability with respect to the correctness of information in this document. Copyright by Volkswagen AG.
satelettronica

Model engine output	Tyres	Tyre size	Wheel rim	Off-set in mm	Snow chains	Remarks
	Modification	195/65 R 15 91H/V	6 J x 15 ⇒ page 225	47	Yes	Tyre makes recommended by Volkswagen: ◆ Summer tyres ⇒ page 646 ◆ Winter tyres ⇒ page 683
		195/65 R 15 91T/H/V	6 1/2 J x 15 ⇒ page 226	50	Yes	
		205/60 R 15 91T/H/V	6 J x 15 ⇒ page 225	47	Yes	
		205/55 R 16 91T/H/V/W	6 1/2 J x 16 ⇒ page 227	50	No	
	Winter tyres	195/65 R 15 91Q/T/H	6 J x 15 ⇒ page 211	47	Yes	

Tyre inflation pressures are located on a sticker in the fuel tank flap or in ⇒ Maintenance ; Booklet ; Check tyres: condition, profile, inflation pressure, depth of tread .

30.2 Wheel allocation for Golf BlueMotion, type 1K model year 2008 to model year 2009

Explanation of information on wheels ⇒ page 59

Torque specifications for wheel bolts ⇒ Running gear, axles, steering; Rep. gr. 44 ; Torque specifications for fitting wheels

Pitch circle diameter:	112 mm
Number of wheel bolt holes:	5

30.2.1 6 J x 15

Caution

Observe the allocation of wheels and tyres to the respective engines, which are listed in the overview table ⇒ page 224 .

1K0 601 027 C, 1K0 601 027 H - Wheel and tyre combination
⇒ page 224

Size:	6 J x 15
Wheel offset in mm:	47
Wheel load in kg:	615

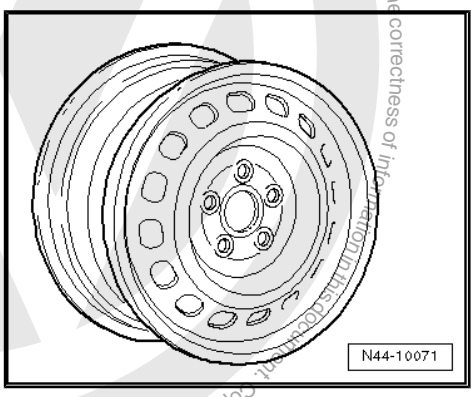

Protected by copyright. Copying for private or commercial purposes, in part or in whole, is not permitted unless authorised by Volkswagen AG. Volkswagen AG does not guarantee or accept any liability with respect to the correctness of information in this document. Copyright by Volkswagen AG.
satelettronica

1K0 601 027 T - Wheel and tyre combination ⇒ page 224

Size:	6 J x 15
Wheel offset in mm:	47
Wheel load in kg:	615

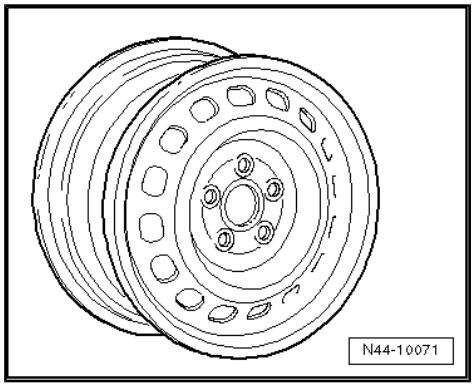

2K0 601 027 - Wheel and tyre combination ⇒ page 224

Size:	6 J x 15
Wheel offset in mm:	47
Wheel load in kg:	650

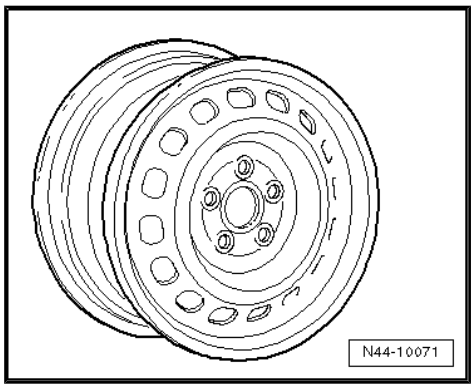

30.2.2 6 1/2 J x 15

Caution

Observe the allocation of wheels and tyres to the respective engines, which are listed in the overview table ⇒ page 224 *.*

1K0 601 025 A - Wheel and tyre combination ⇒ page 225

Size:	6 1/2 J x 15
Wheel offset in mm:	50
Wheel load in kg:	600

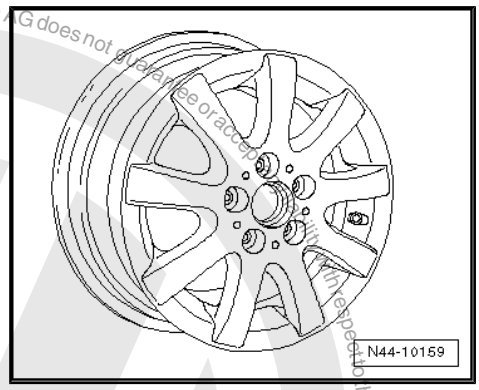

1K0 601 025 AK - Wheel and tyre combination ⇒ page 225

Size:	6 1/2 J x 15
Wheel offset in mm:	50
Wheel load in kg:	600

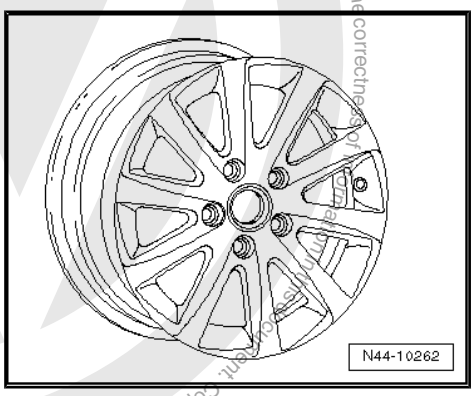

Protected by copyright. Copyright for private or commercial purposes, in part or in whole, is not permitted unless authorised by Volkswagen AG. Volkswagen AG does not guarantee or accept any liability with respect to the correctness of information in this document. Copyright by Volkswagen AG.
satelettronica

1K0 601 025 AQ - Wheel and tyre combination ⇒ page 225

Size:	6 1/2 J x 15
Wheel offset in mm:	50
Wheel load in kg:	600

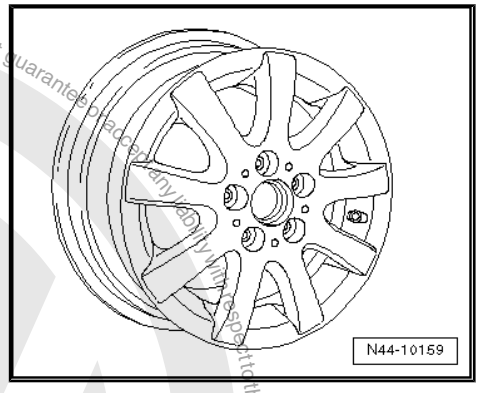

1K0 601 025 CA - Wheel and tyre combination ⇒ page 225

Size:	6 1/2 J x 15
Wheel offset in mm:	50
Wheel load in kg:	600

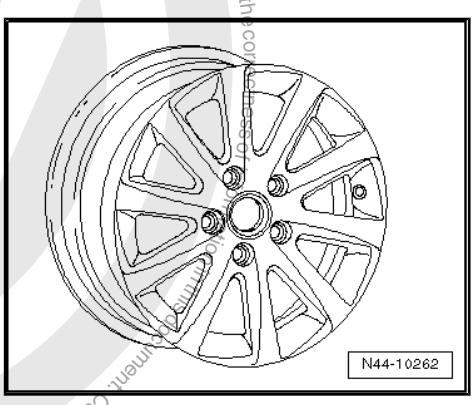

30.2.3 6 1/2 J x 16

Caution

Observe the allocation of wheels and tyres to the respective engines, which are listed in the overview table ⇒ page 224 *.*

1K0 601 027 A - Wheel and tyre combination ⇒ page 225

Size:	6 1/2 J x 16
Wheel offset in mm:	50
Wheel load in kg:	615

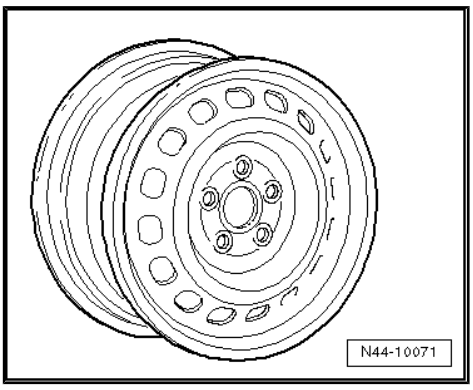

1K0 601 027 J, 1K0 601 027 K - Wheel and tyre combination ⇒ page 225

Size:	6 1/2 J x 16
Wheel offset in mm:	50
Wheel load in kg:	615

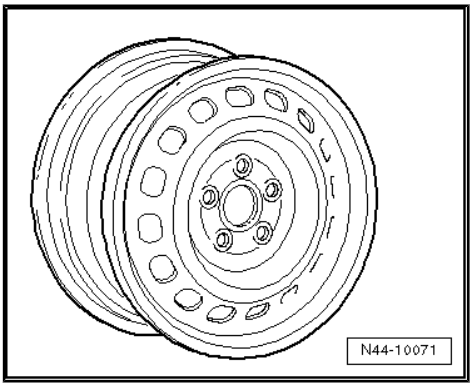

Protected by copyright. Copying for private or commercial purposes, in part or in whole, is not permitted unless authorised by Volkswagen AG. Volkswagen AG does not guarantee or accept any liability with respect to the correctness and completeness of this document. Copyright by Volkswagen AG.
satelettronica

1K0 601 025 AJ - Wheel and tyre combination ⇒ page 225

Size:	$6^1/_2$ J x 16
Wheel offset in mm:	50
Wheel load in kg:	615

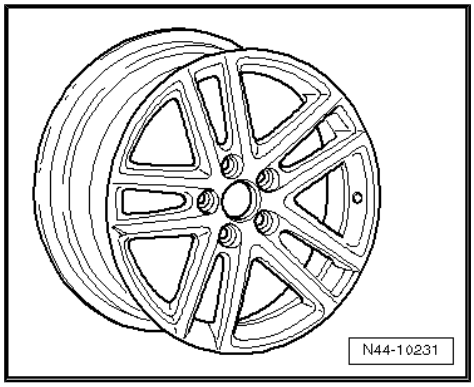

1K0 601 025 BC - Wheel and tyre combination ⇒ page 225

Size:	$6^1/_2$ J x 16
Wheel offset in mm:	50
Wheel load in kg:	615

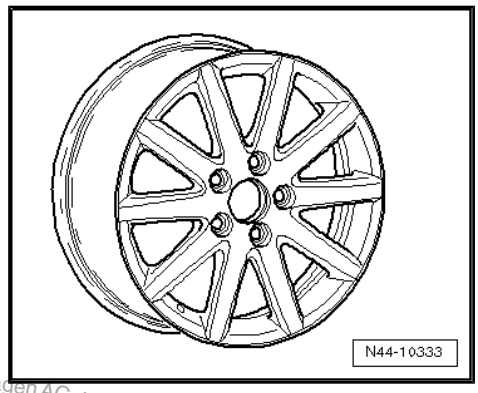

1K0 601 025 BM - Wheel and tyre combination ⇒ page 225

Size:	$6^1/_2$ J x 16
Wheel offset in mm:	50
Wheel load in kg:	615

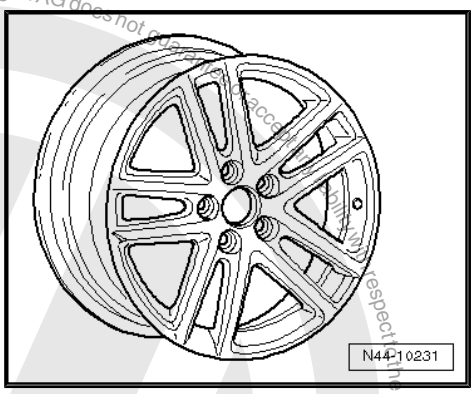

1K0 601 025 BR - Wheel and tyre combination ⇒ page 225

Size:	$6^1/_2$ J x 16
Wheel offset in mm:	50
Wheel load in kg:	615

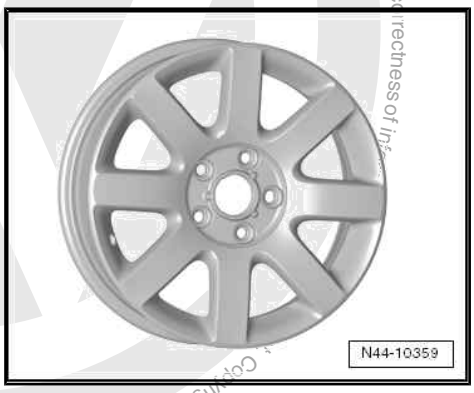

Protected by copyright. Copying for private or commercial purposes, part or in whole, is not permitted unless authorised by Volkswagen AG. Volkswagen AG does not guarantee or accept any liability with respect to the correctness of information. Copyright by Volkswagen AG.
satelettronica

1K0 601 025 BS - Wheel and tyre combination ⇒ page 225

Size:	$6^1/_2$ J x 16
Wheel offset in mm:	50
Wheel load in kg:	615

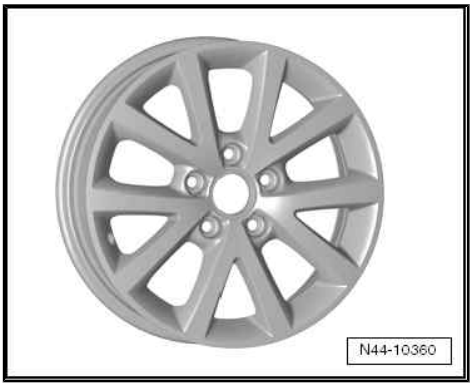

1K0 601 025 CB - Wheel and tyre combination ⇒ page 225

Size:	$6^1/_2$ J x 16
Wheel offset in mm:	50
Wheel load in kg:	615

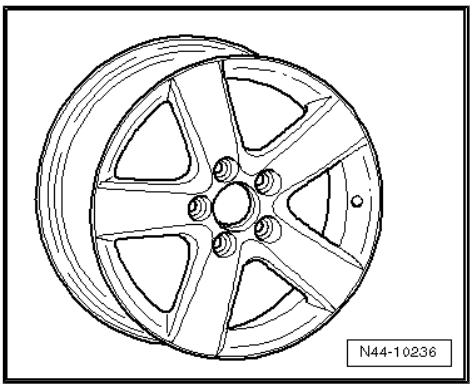

1K0 601 025 CG - Wheel and tyre combination ⇒ page 225

Size:	$6^1/_2$ J x 16
Wheel offset in mm:	50
Wheel load in kg:	615

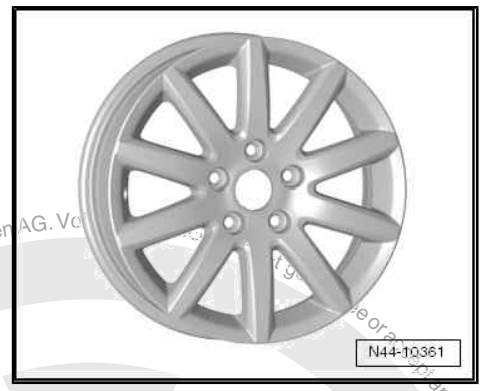

1T0 601 025 C - Wheel and tyre combination ⇒ page 225

Size:	$6^1/_2$ J x 16
Wheel offset in mm:	50
Wheel load in kg:	615

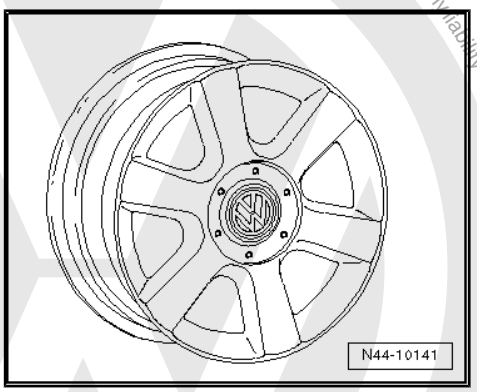

Protected by copyright. Copying for private or commercial purposes, in part or in whole, is not permitted unless authorised by Volkswagen AG. Volkswagen AG does not guarantee or assume any liability with respect to the correctness of information in this document. Copyright by Volkswagen AG.
satelettronica

1K0 601 025 F - Wheel and tyre combination ⇒ page 225

Size:	$6^1/_2$ J x 16
Wheel offset in mm:	50
Wheel load in kg:	615

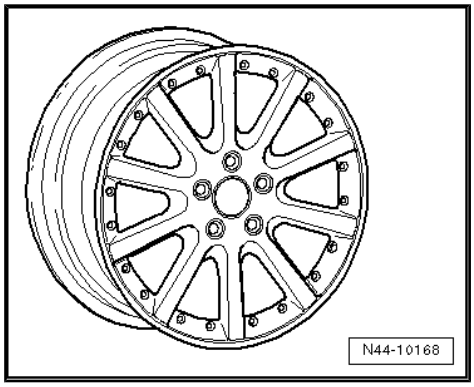

1K0 601 025 P - Wheel and tyre combination ⇒ page 225

Size:	$6^1/_2$ J x 16
Wheel offset in mm:	50
Wheel load in kg:	615

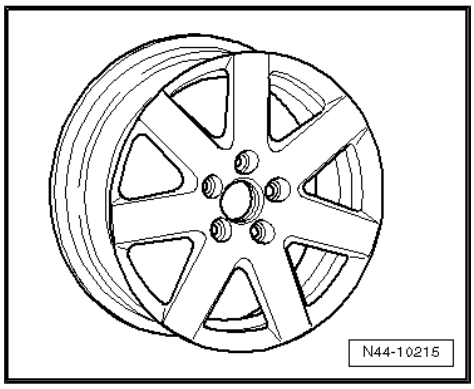

1K0 601 025 R - Wheel and tyre combination ⇒ page 225

Size:	$6^1/_2$ J x 16
Wheel offset in mm:	50
Wheel load in kg:	615

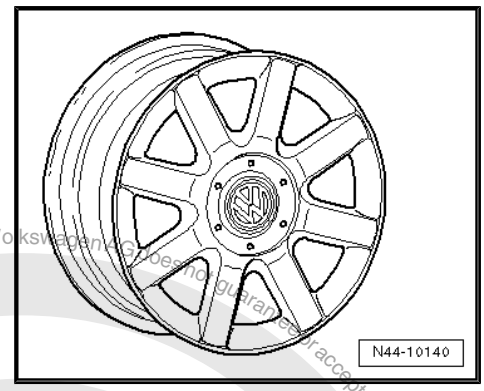

1T0 601 025 G, 1T0 601 025 K - Wheel and tyre combination ⇒ page 225

Size:	$6^1/_2$ J x 16
Wheel offset in mm:	50
Wheel load in kg:	615

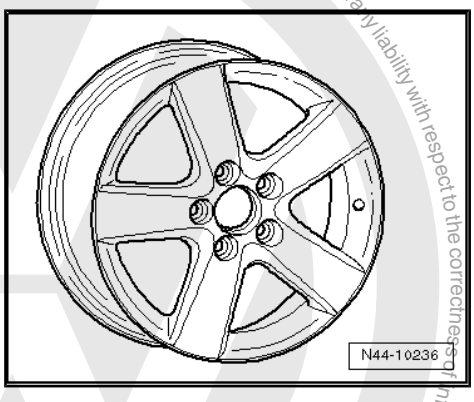

Protected by copyright. Copying for private or commercial purposes, in part or in whole, is not permitted unless authorised by Volkswagen AG. Volkswagen AG does not guarantee or accept any liability with respect to the correctness of information in this document. Copyright by Volkswagen AG.
satelettronica

1T0 601 025 M - Wheel and tyre combination ⇒ page 225

Size:	$6^1/_2$ J x 16
Wheel offset in mm:	50
Wheel load in kg:	615

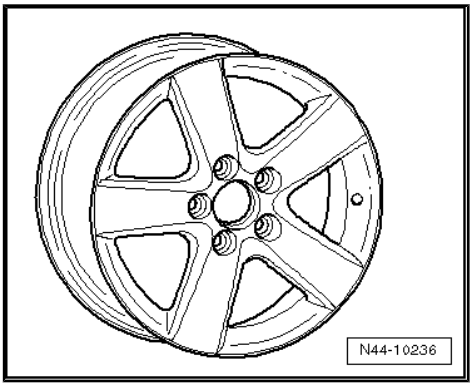

1T0 601 025 R - Wheel and tyre combination ⇒ page 225

Size:	$6^1/_2$ J x 16
Wheel offset in mm:	50
Wheel load in kg:	615

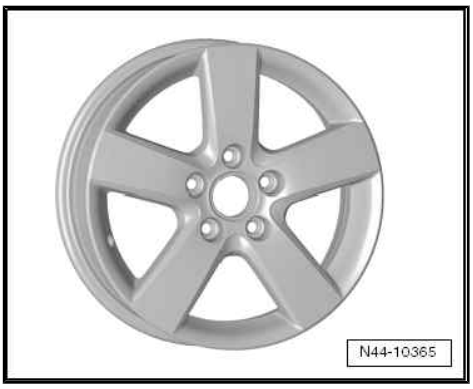

Protected by copyright. Copying for private or commercial purposes, in part or in whole, is not permitted unless authorised by Volkswagen AG. Volkswagen AG does not guarantee or accept any liability with respect to the correctness of information in this document. Copyright by Volkswagen AG.

satelettronica

31 Golf GTI model year 2005 to model year 2009

General

Volkswagen vehicles are built according to the latest findings in safety engineering. To keep it that way, we recommend the use of only genuine Volkswagen spare parts. You can recognise this by the VW Audi logo and by the part number. It has been established that these parts are reliable, safe and suitable.

Despite constant appraisal of the market, we cannot assess other products on these points, even when in isolated cases they have been passed by official inspectors or have been granted official approval. Therefore, we cannot, of course, assume any liability if these products are installed.

> ⚠ **WARNING**
>
> *The products from Volkswagen genuine parts and Votex genuine accessories may differ in fitting requirements, torque specifications and so on.*
>
> *Always follow the respective fitting and operating instructions.*

The wheel and tyre combinations or changes listed in the vehicle tables refer exclusively to Volkswagen Genuine wheels. Approval of wheel and tyre combinations or a change to wheels from the accessories trade is not possible with the parts certificate attached here.

> ⚠ **WARNING**
>
> *The fitting instructions and torque specifications for wheels from Votex genuine accessories may differ from those intended for wheels from Volkswagen genuine parts.*
>
> *Therefore, always observe the torque settings for the wheel bolts as well as the respective fitting and operating instructions.*

31.1 Golf GTI, type 1K model year 2005 to model year 2008

Appendix for parts certificate 2066/08

The parts certificate can be found on the Volkswagen ServiceNet under Technology; Guides; Wheels and Tyres Guide.

Type Approval No.: e1*2001/116*0242*07 to e1*2001/116*0242*22

Overview

Model engine output	Tyres	Tyre size	Wheel rim	Off-set in mm	Snow chains	Remarks
2.0l 147 kW; 2.0l 169 kW; petrol engine	Standard tyres	225/45 R 17 91W	$7^1/_2$ J x 17 ⇒ page 242	51	No	General information on: ◆ Winter tyres ⇒ page 15 ◆ Snow chains ⇒ page 18

Volkswagen AG does not guarantee or accept any liability with respect to the correctness of information in this document. Copyright by Volkswagen AG.
Protected by copyright. Copying for private or commercial purposes, in part or in whole, is not permitted unless authorised by Volkswagen AG.
satelettronica

Model engine output	Tyres	Tyre size	Wheel rim	Off-set in mm	Snow chains	Remarks
	Modification	205/55 R 16 91W	$6^1/_2$ J x 16 ⇒ page 235	50	No	Tyre makes recommended by Volkswagen: ◆ Summer tyres ⇒ page 646 ◆ Winter tyres ⇒ page 683
		225/45 R 17 91W	7 J x 17 ⇒ page 240	54	No	
		225/40 R 18 92Y	$7^1/_2$ J x 18 ⇒ page 243	51	No	
	Winter tyres	205/55 R 16 91Q/T/H	6 J x 16 ⇒ page 235	50	Yes	
		205/50 R 17 93Q/T/H	6 J x 17 ⇒ page 239	48.5	Yes* ⇒ page 233	* Only snow chains with fine links of no more than 8 mm may be used ⇒ page 233 .

Tyre inflation pressures are located on a sticker in the fuel tank flap or in ⇒ Maintenance ; Booklet ; Check tyres: condition, profile, inflation pressure, depth of tread .

Approved snow chains for 6 J x 17 offset 48.5 wheel rim

The following snow chains are only permissible in combination with the adjacent wheel and tyre combination!

Chain manufacturer Item no.	Accessory part number	Tyre size	Wheel rim	Part no.
Ottinger 100 956	-	205/50 R 17 93Q/T/H	6 J x 17 offset 48.5	1K0 601 025 N

31.2 Golf GTI, type 1K model year 2009

Appendix for parts certificate 2066/08

The parts certificate can be found on the Volkswagen ServiceNet under Technology; Guides; Wheels and Tyres Guide.

Type Approval No.: e1*2001/116*0242*23 to e1*2001/116*0242*24

Overview

Model engine output	Tyres	Tyre size	Wheel rim	Off-set in mm	Snow chains	Remarks
2.0l 147 kW; petrol engine	Standard tyres	225/45 R 17 91V	$7^1/_2$ J x 17 ⇒ page 242	51	No	General information on: ◆ Winter tyres ⇒ page 15 ◆ Snow chains ⇒ page 18

Protected by copyright. Copying for private or commercial purposes, in part or whole, is not permitted unless authorised by Volkswagen AG. Volkswagen AG does not guarantee or accept any liability with respect to the correctness of information in this document. Copyright by Volkswagen AG.

satelettronica

Model engine output	Tyres	Tyre size	Wheel rim	Off-set in mm	Snow chains	Remarks
	Modification	205/55 R 16 91V	6 1/2 J x 16 ⇒ page 235	50	No	Tyre makes recommended by Volkswagen: ♦ Summer tyres ⇒ page 646 ♦ Winter tyres ⇒ page 683
		225/45 R 17 91V	7 J x 17 ⇒ page 240	54	No	
		225/40 R 18 92Y	7 1/2 J x 18 ⇒ page 243	51	No	
	Winter tyres	205/55 R 16 91Q/T/H	6 J x 16 ⇒ page 235	50	Yes	
		205/50 R 17 93Q/T/H	6 J x 17 ⇒ page 239	48,5	Yes* ⇒ page 234	* Only snow chains with fine links of no more than 8 mm may be used ⇒ page 234 .
2.0l 169 kW; petrol engine	Standard tyres	225/45 R 17 91W	7 1/2 J x 17 ⇒ page 242	51	No	
	Modification	205/55 R 16 91W	6 1/2 J x 16 ⇒ page 235	50	No	
		225/45 R 17 91W	7 J x 17 ⇒ page 240	54	No	
		225/40 R 18 92Y	7 1/2 J x 18 ⇒ page 243	51	No	
	Winter tyres	205/55 R 16 91Q/T/H	6 J x 16 ⇒ page 235	50	Yes	
		205/50 R 17 93Q/T/H	6 J x 17 ⇒ page 239	48.5	Yes* ⇒ page 234	

Tyre inflation pressures are located on a sticker in the fuel tank flap or in ⇒ Maintenance ; Booklet ; Check tyres: condition, profile, inflation pressure, depth of tread .

Approved snow chains for 6 J x 17 offset 48.5 wheel rim

The following snow chains are only permissible in combination with the adjacent wheel and tyre combination!

Chain manufacturer Item no.	Accessory part number	Tyre size	Wheel rim	Part no.
Ottinger 100 956	-	205/50 R 17 93Q/T/H	6 J x 17 offset 48.5	1K0 601 025 N

Protected by copyright. Copying for private or commercial purposes, in part or in whole, is not permitted unless authorised by Volkswagen AG. Volkswagen AG does not guarantee or accept any liability with respect to the correctness of information in this document. Copyright by Volkswagen AG.
satelettronica

31.3 Wheel allocation for Golf GTI, type 1K model year 2005 to model year 2009

Explanation of information on wheels ⇒ page 59

Torque settings for wheel bolts ⇒ Running gear, axles, steering; Rep. gr. 44 ; Torque settings for fitting wheels

Pitch circle diameter:	112 mm
Number of wheel bolt holes:	5

31.3.1 6 J x 16

Caution

Observe the allocation of wheels and tyres to the respective engines, which are listed in the overview table *⇒ page 232* *.*

Winter wheels

8P0 601 027 - Wheel and tyre combination ⇒ page 233

Size:	6 J x 16
Wheel offset in mm:	50
Wheel load in kg:	600

Use the following wheel bolt caps for wheel bolts:

- 1K0.601.173 (4 per wheel)
- 1K0.601.173.A (1 per wheel)

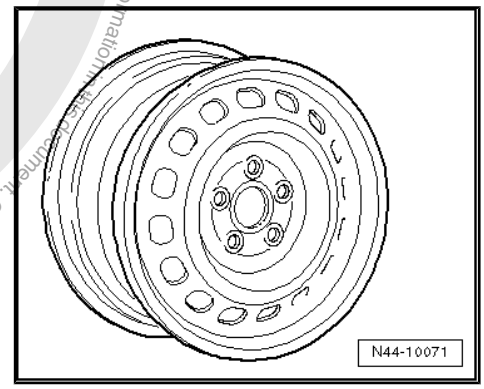

1K0 601 025 Q - Wheel and tyre combination ⇒ page 233

Size:	6 J x 16 EH2 ⇒ page 59
Wheel offset in mm:	50
Wheel load in kg:	615

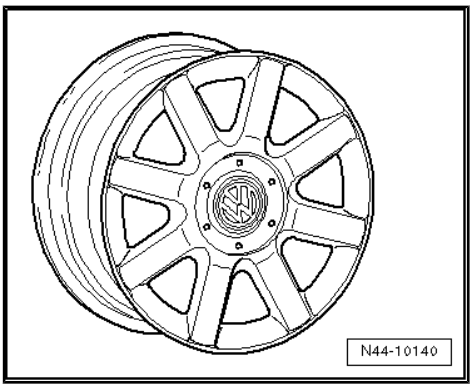

31.3.2 6 1/2 J x 16

Caution

Observe the allocation of wheels and tyres to the respective engines, which are listed in the overview table *⇒ page 232* *.*

satelettronica

1K0 601 027 A - Wheel and tyre combination ⇒ page 233

Size:	$6^1/_2$ J x 16
Wheel offset in mm:	50
Wheel load in kg:	615

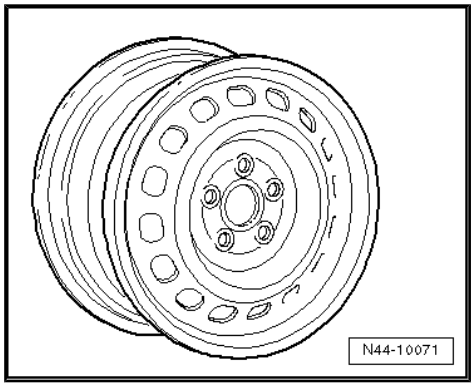

1K0 601 027 J, 1K0 601 027 K - Wheel and tyre combination ⇒ page 233

Size:	$6^1/_2$ J x 16
Wheel offset in mm:	50
Wheel load in kg:	615

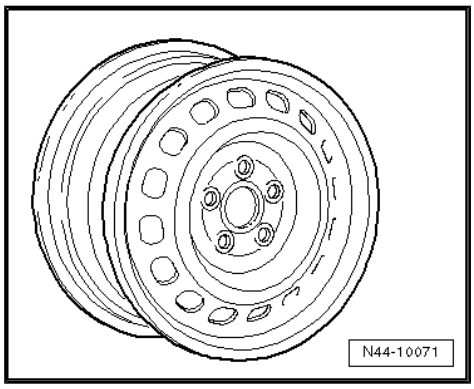

1K0 601 025 AJ - Wheel and tyre combination ⇒ page 233

Size:	$6^1/_2$ J x 16
Wheel offset in mm:	50
Wheel load in kg:	615

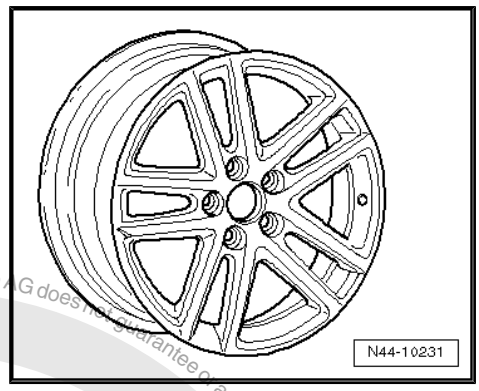

1K0 601 025 BC - Wheel and tyre combination ⇒ page 233

Size:	$6^1/_2$ J x 16
Wheel offset in mm:	50
Wheel load in kg:	615

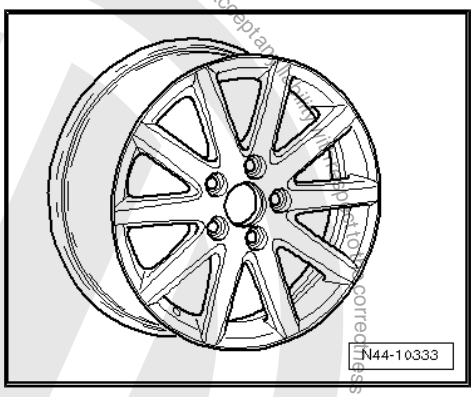

Protected by copyright. Copying for private or commercial purposes, in part or in whole, is not permitted unless authorised by Volkswagen AG. Volkswagen AG does not guarantee or accept any liability with respect to the correctness of information in this document. Copyright by Volkswagen AG.
satelettronica

1K0 601 025 BM - Wheel and tyre combination ⇒ page 233

Size:	$6^1/_2$ J x 16
Wheel offset in mm:	50
Wheel load in kg:	615

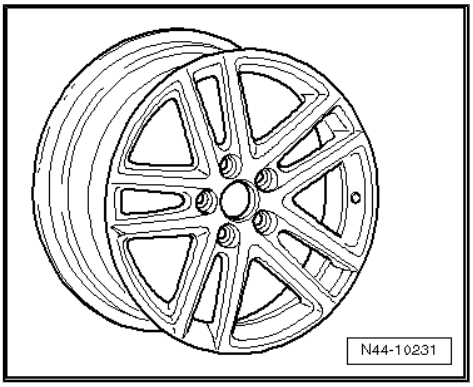

1K0 601 025 BR - Wheel and tyre combination ⇒ page 233

Size:	$6^1/_2$ J x 16
Wheel offset in mm:	50
Wheel load in kg:	615

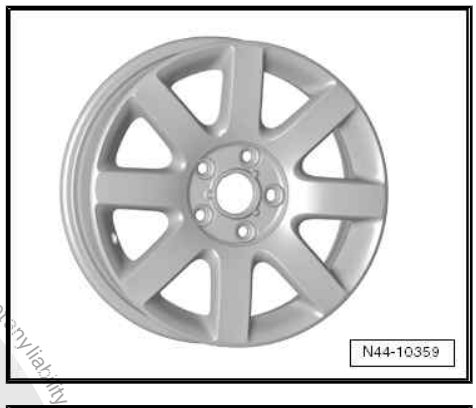

1K0 601 025 BS - Wheel and tyre combination ⇒ page 233

Size:	$6^1/_2$ J x 16
Wheel offset in mm:	50
Wheel load in kg:	615

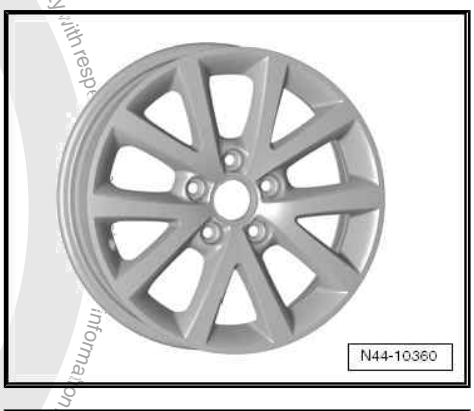

1K0 601 025 CB - Wheel and tyre combination ⇒ page 233

Size:	$6^1/_2$ J x 16
Wheel offset in mm:	50
Wheel load in kg:	615

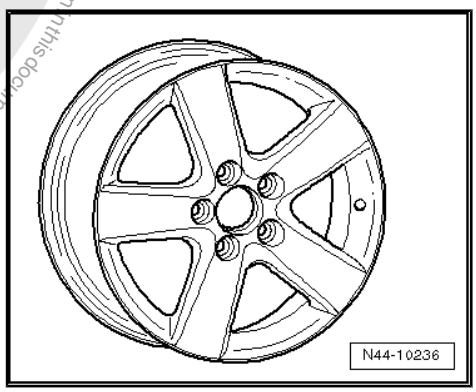

Protected by copyright. Copying for private or commercial purposes, in part or in whole, is not permitted unless authorised by Volkswagen AG. Volkswagen AG does not guarantee or accept any liability with respect to the correctness of information in this document. Copyright by Volkswagen AG.
satelettronica

1K0 601 025 CG - Wheel and tyre combination ⇒ page 233

Size:	$6^1/_2$ J x 16
Wheel offset in mm:	50
Wheel load in kg:	615

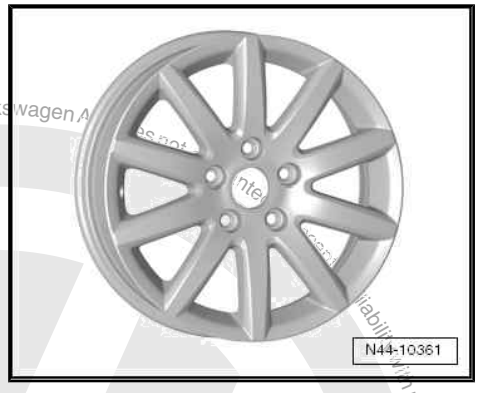

1K0 601 025 P - Wheel and tyre combination ⇒ page 233

Size:	$6^1/_2$ J x 16
Wheel offset in mm:	50
Wheel load in kg:	615

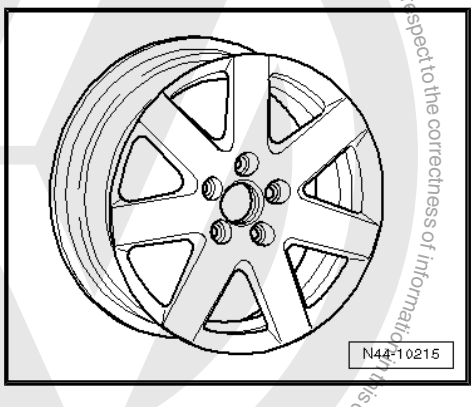

1K0 601 025 R - Wheel and tyre combination ⇒ page 233

Size:	$6^1/_2$ J x 16
Wheel offset in mm:	50
Wheel load in kg:	615

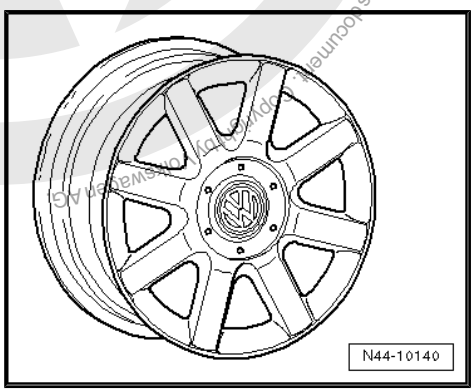

1T0 601 025 C - Wheel and tyre combination ⇒ page 233

Size:	$6^1/_2$ J x 16
Wheel offset in mm:	50
Wheel load in kg:	615

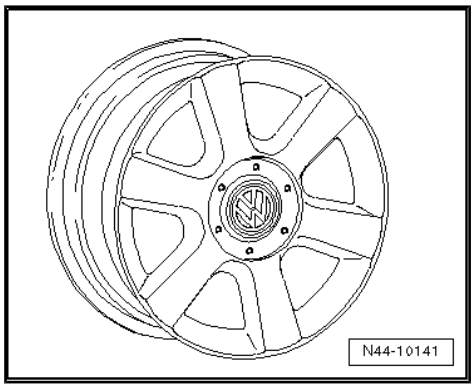

Protected by copyright. Copying for private or commercial purposes, in part or in whole, is not permitted unless authorised by Volkswagen AG. Volkswagen AG does not guarantee or accept any liability with respect to the correctness of information in this document.
satelettronica

1T0 601 025 G, 1T0 601 025 K - Wheel and tyre combination ⇒ page 233

Size:	$6^1/_2$ J x 16
Wheel offset in mm:	50
Wheel load in kg:	615

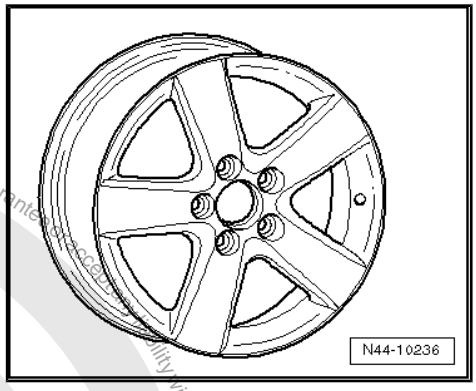

1T0 601 025 M - Wheel and tyre combination ⇒ page 233

Size:	$6^1/_2$ J x 16
Wheel offset in mm:	50
Wheel load in kg:	615

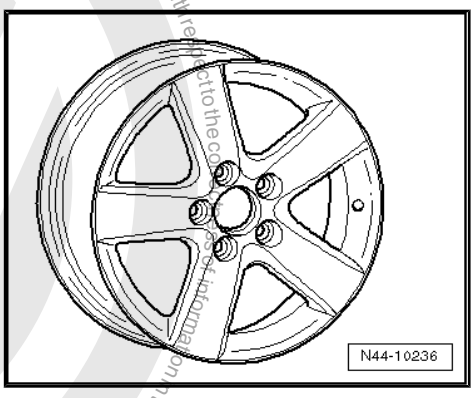

1T0 601 025 R - Wheel and tyre combination ⇒ page 233

Size:	$6^1/_2$ J x 16
Wheel offset in mm:	50
Wheel load in kg:	615

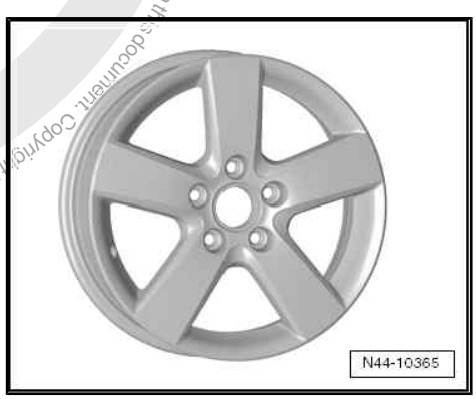

31.3.3 6 J x 17

Caution

Observe the allocation of wheels and tyres to the respective engines, which are listed in the overview table ⇒ page 232 *.*

Volkswagen AG. Volkswagen AG does not guarantee or accept any liability with respect to the correctness of information in this document. Copyright by Volkswagen AG.
Protected by copyright. Copying for private or commercial purposes, in whole or in part, is not permitted unless authorised by Volkswagen AG.
satelettronica

Winter wheel

1K0 601 025 N - Wheel and tyre combination ⇒ page 233

Size:	6 J x 17
Wheel offset in mm:	48.5
Wheel load in kg:	615

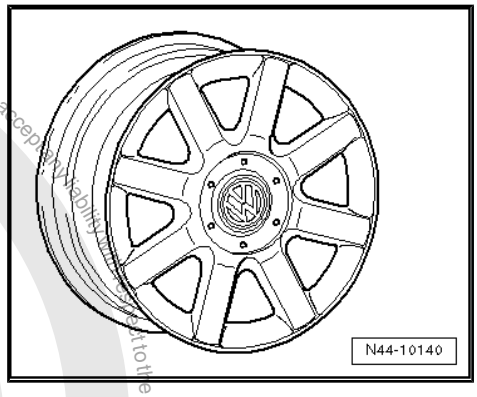

31.3.4 7 J x 17

Caution

Observe the allocation of wheels and tyres to the respective engines, which are listed in the overview table *⇒ page 232* *.*

1K0 601 025 B - Wheel and tyre combination ⇒ page 233

Size:	7 J x 17
Wheel offset in mm:	54
Wheel load in kg:	615

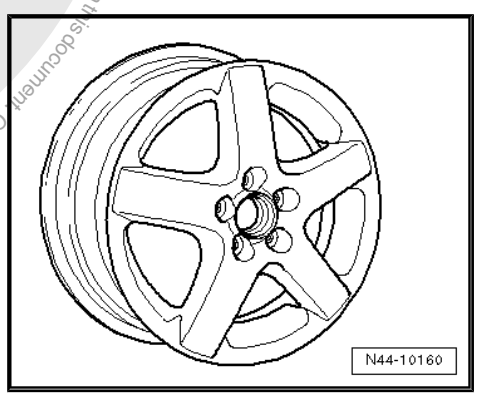

1K0 601 025 C - Wheel and tyre combination ⇒ page 233

Size:	7 J x 17
Wheel offset in mm:	54
Wheel load in kg:	615

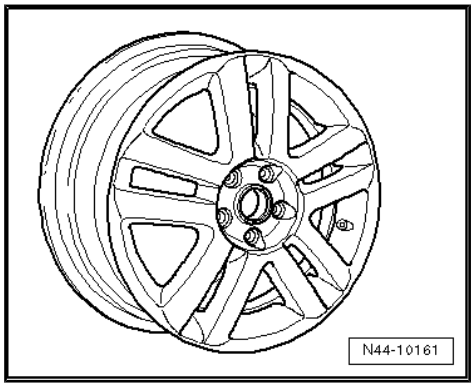

Protected by copyright. Copying for private or commercial purposes, in part or in whole, is not permitted unless authorised by Volkswagen AG. Volkswagen AG does not guarantee or accept any liability with respect to the correctness of information in this document. Copyright by Volkswagen AG.

satelettronica

1K0 601 025 J - Wheel and tyre combination ⇒ page 233

Size:	7 J x 17
Wheel offset in mm:	54
Wheel load in kg:	615

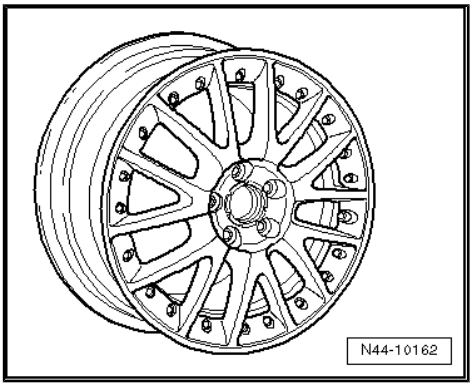

1K0 601 025 K - Wheel and tyre combination ⇒ page 233

Size:	7 J x 17
Wheel offset in mm:	54
Wheel load in kg:	615

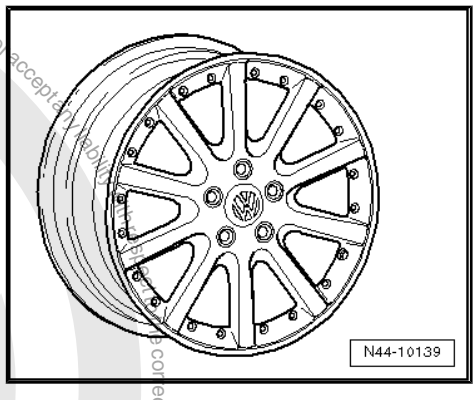

1K0 601 025 M - Wheel and tyre combination ⇒ page 233

Size:	7 J x 17
Wheel offset in mm:	54
Wheel load in kg:	615

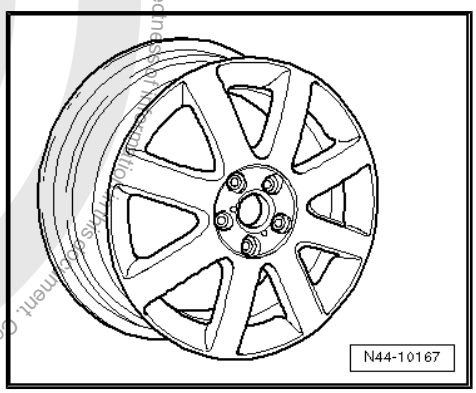

1K0 601 025 T - Wheel and tyre combination ⇒ page 233

Size:	7 J x 17
Wheel offset in mm:	54
Wheel load in kg:	615

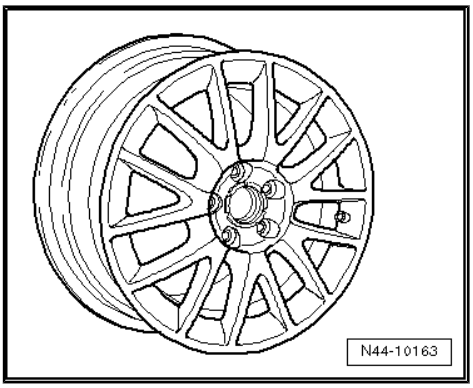

Protected by copyright. Copying for private or commercial purposes, in part or in whole, is not permitted unless authorised by Volkswagen AG. Volkswagen AG does not guarantee or accept any liability with respect to the correctness and completeness of this document. Copyright by Volkswagen AG.
satelettronica

1K0 601 025 AF - Wheel and tyre combination ⇒ page 233

Size:	7 J x 17
Wheel offset in mm:	54
Wheel load in kg:	630

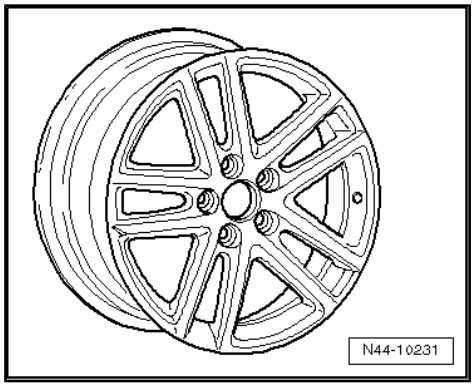

1K0 601 025 AE - Wheel and tyre combination ⇒ page 233

Size:	7 J x 17
Wheel offset in mm:	54
Wheel load in kg:	630

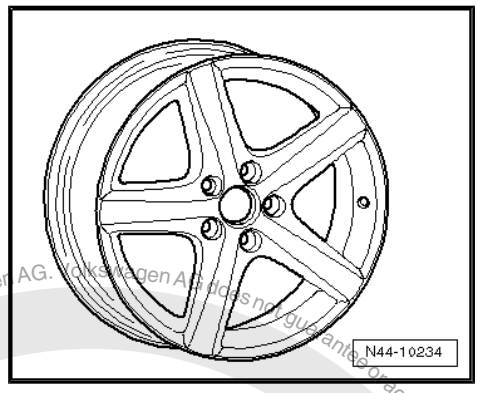

1K0 601 025 AN - Wheel and tyre combination ⇒ page 233

Size:	7 J x 17
Wheel offset in mm:	54
Wheel load in kg:	615

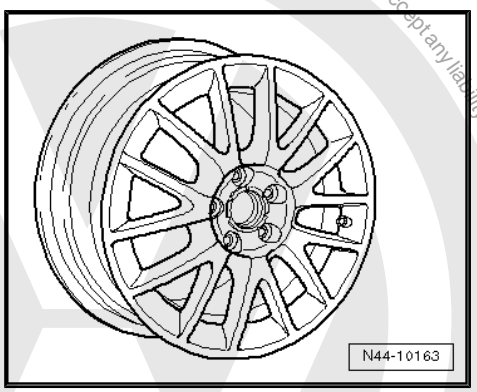

31.3.5 7 1/2 J x 17

> ⚠ **Caution**
>
> *Observe the allocation of wheels and tyres to the respective engines, which are listed in the overview table* *⇒ page 232* *.*

1K0 601 025 AC - Wheel and tyre combination ⇒ page 232

Size:	7 1/2 J x 17
Wheel offset in mm:	51
Wheel load in kg:	615

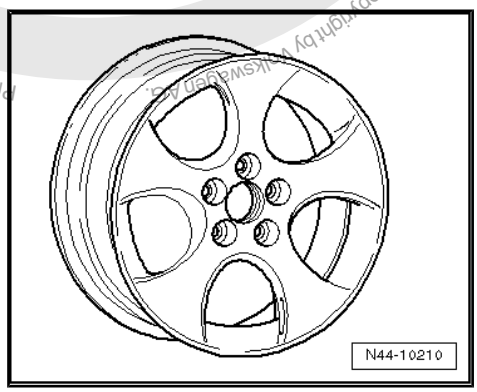

Protected by copyright. Copying for private or commercial purposes, in part or in whole, is not permitted unless authorised by Volkswagen AG. Volkswagen AG does not guarantee or accept any liability with respect to the correctness of information in this document. Copyright by Volkswagen AG.
satelettronica

1K0 601 025 BB - Wheel and tyre combination ⇒ page 232

Size:	$7^1/_2$ J x 17
Wheel offset in mm:	51
Wheel load in kg:	615

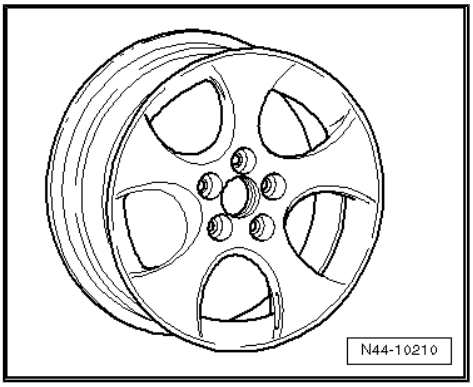

1K0 601 025 BK - Wheel and tyre combination ⇒ page 232

Size:	$7^1/_2$ J x 17
Wheel offset in mm:	51
Wheel load in kg:	615

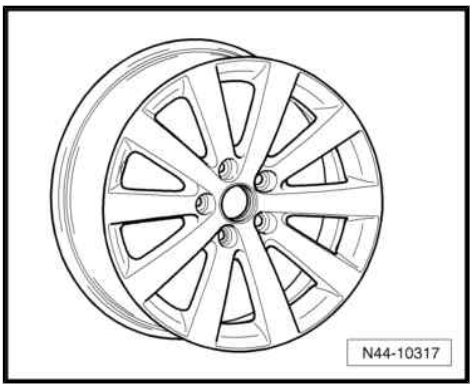

31.3.6 $7^1/_2$ J x 18

Caution

Observe the allocation of wheels and tyres to the respective engines, which are listed in the overview table ⇒ page 232 *.*

1K0 601 025 AD - Wheel and tyre combination ⇒ page 233

Size:	$7^1/_2$ J x 18
Wheel offset in mm:	51
Wheel load in kg:	630

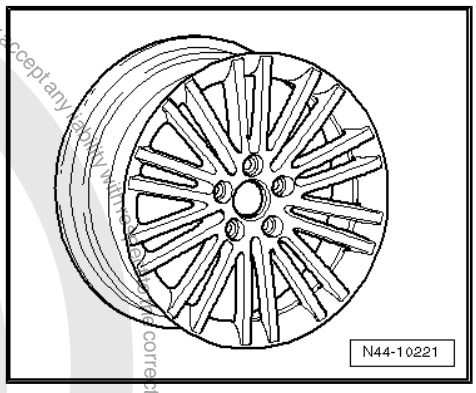

1K0 601 025 AG - Wheel and tyre combination ⇒ page 233

Size:	$7^1/_2$ J x 18
Wheel offset in mm:	51
Wheel load in kg:	630

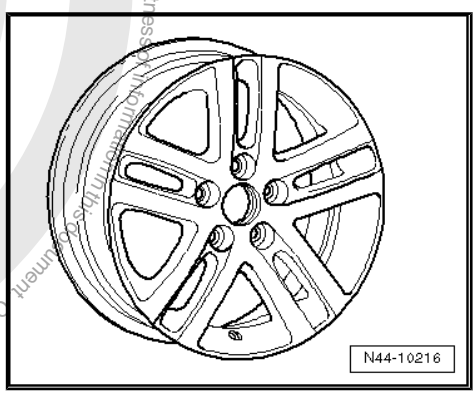

Protected by copyright. Copying for private or commercial purposes, in part or in whole, is not permitted unless authorised by Volkswagen AG. Volkswagen AG does not guarantee or accept any liability with respect to the correctness of information in this document. Copyright by Volkswagen AG.
satelettronica

1K0 601 025 AH - Wheel and tyre combination ⇒ page 233

Size:	$7^1/_2$ J x 18
Wheel offset in mm:	51
Wheel load in kg:	615

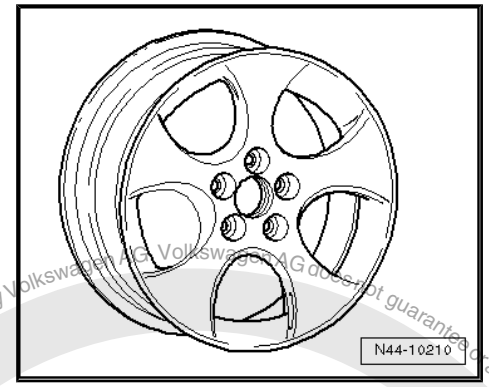

1K0 601 025 AM - Wheel and tyre combination ⇒ page 233

Size:	$7^1/_2$ J x 18
Wheel offset in mm:	51
Wheel load in kg:	615

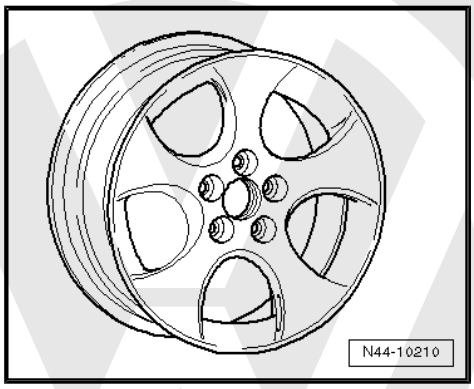

1K0 601 025 AT, 1K0 601 025 CC - Wheel and tyre combination ⇒ page 233

Size:	$7^1/_2$ J x 18
Wheel offset in mm:	51
Wheel load in kg:	615

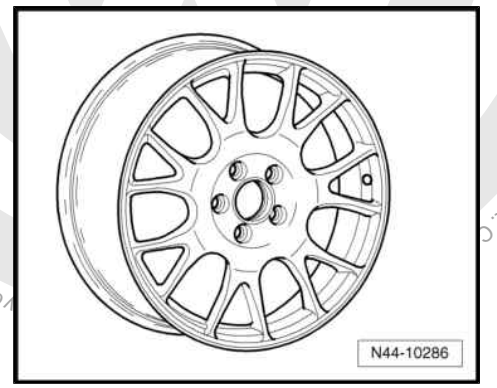

1K0 601 025 BA - Wheel and tyre combination ⇒ page 233

Size:	$7^1/_2$ J x 18
Wheel offset in mm:	51
Wheel load in kg:	615

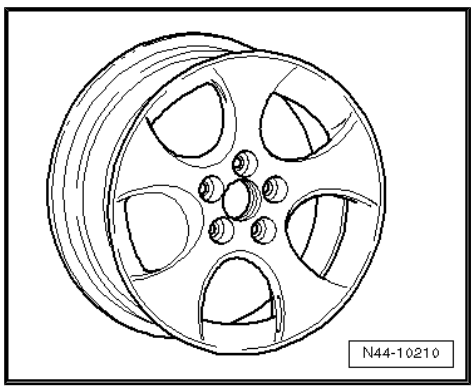

Volkswagen AG, Volkswagen AG does not guarantee or accept any liability with respect to the correctness of information in this document. Copyright. Copying for private or commercial purposes, in part or in whole, is not permitted unless authorised by Volkswagen AG
satelettronica

1K0 601 025 BE - Wheel and tyre combination ⇒ page 233

Size:	$7^1/_2$ J x 18
Wheel offset in mm:	51
Wheel load in kg:	615

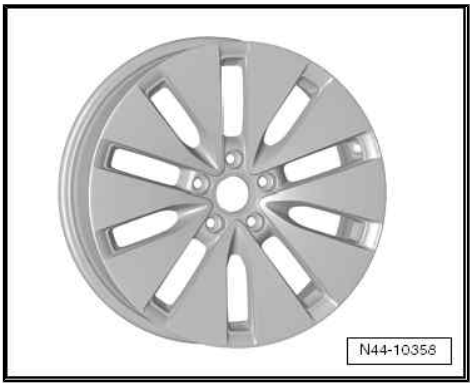

1K0 601 025 BL - Wheel and tyre combination ⇒ page 233

Size:	$7^1/_2$ J x 18
Wheel offset in mm:	51
Wheel load in kg:	615

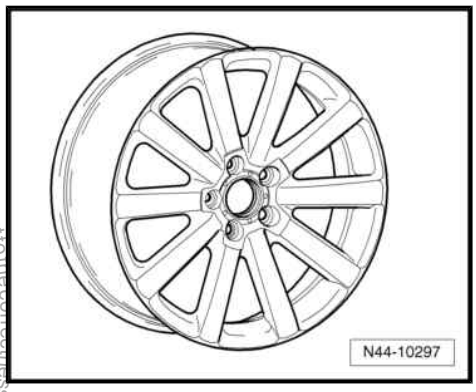

Protected by copyright. Copying for private or commercial purposes, in part or in whole, is not permitted unless authorised by Volkswagen AG. Volkswagen AG does not guarantee or accept any liability with respect to the correctness of information in this document. Copyright by Volkswagen AG.

satelettronica

32 Pirelli Golf model year 2008 to model year 2009

General

Volkswagen vehicles are built according to the latest findings in safety engineering. To keep it that way, we recommend the use of only genuine Volkswagen spare parts. You can recognise this by the VW Audi logo and by the part number. It has been established that these parts are reliable, safe and suitable.

Despite constant appraisal of the market, we cannot assess other products on these points, even when in isolated cases they have been passed by official inspectors or have been granted official approval. Therefore, we cannot, of course, assume any liability if these products are installed.

WARNING

The products from Volkswagen genuine parts and Votex genuine accessories may differ in fitting requirements, torque specifications and so on.

Always follow the respective fitting and operating instructions.

The wheel and tyre combinations or changes listed in the vehicle tables refer exclusively to Volkswagen Genuine wheels. Approval of wheel and tyre combinations or a change to wheels from the accessories trade is not possible with the parts certificate attached here.

WARNING

The fitting instructions and torque specifications for wheels from Votex genuine accessories may differ from those intended for wheels from Volkswagen genuine parts.

Therefore, always observe the torque settings for the wheel bolts as well as the respective fitting and operating instructions.

32.1 Pirelli Golf, type 1K model year 2008 to model year 2009

Appendix for parts certificate 2066/08

The parts certificate can be found on the Volkswagen ServiceNet under Technology; Guides; Wheels and Tyres Guide.

Type Approval No.: e1*2001/116*0242*20 to e1*2001/116*0242*24

Overview

Model engine output	Tyres	Tyre size	Wheel rim	Off-set in mm	Snow chains	Remarks
2.0l 169 kW; petrol engine	Standard tyres	225/40 R 18 92Y	$7^1/_2$ J x 18 ⇒ page 256	51	No	General information on: ◆ Winter tyres ⇒ page 15 ◆ Snow chains ⇒ page 18

Protected by copyright. Copyright by Volkswagen AG.
Copyright by Volkswagen AG. Volkswagen AG does not guarantee or accept any liability with respect to the correctness of information in this document.
satelettronica

Model engine output	Tyres	Tyre size	Wheel rim	Off-set in mm	Snow chains	Remarks
	Modification	205/55 R 16 91W	$6^1/_2$ J x 16 ⇒ page 248	50	No	Tyre makes recommended by Volkswagen: ◆ Summer tyres ⇒ page 646 ◆ Winter tyres ⇒ page 683
		225/45 R 17 91W	7 J x 17 ⇒ page 252	54	No	
		225/45 R 17 91W	$7^1/_2$ J x 17 ⇒ page 255	51	No	
	Winter tyres	205/55 R 16 91Q/T/H	6 J x 16 ⇒ page 247	50	Yes	
		205/50 R 17 93Q/T/H	6 J x 17 ⇒ page 252	48,5	Yes* ⇒ page 247	* Only snow chains with fine links of no more than 8 mm may be used ⇒ page 247 .

Tyre inflation pressures are located on a sticker in the fuel tank flap or in ⇒ Maintenance ; Booklet ; Check tyres: condition, profile, inflation pressure, depth of tread.

Approved snow chains for 6 J x 17 offset 48.5 wheel rim

The following snow chains are only permissible in combination with the adjacent wheel and tyre combination!

Chain manufacturer Item no.	Accessory part number	Tyre size	Wheel rim	Part no.
Ottinger 100 956	-	205/50 R 17 93Q/T/H	6 J x 17 offset 48.5	1K0 601 025 N

32.2 Wheel allocation for Pirelli Golf, type 1K model year 2008 to model year 2009

Explanation of information on wheels ⇒ page 59

Torque settings for wheel bolts ⇒ Running gear, axles, steering; Rep. gr. 44 ; Torque settings for fitting wheels

Pitch circle diameter:	112 mm
Number of wheel bolt holes:	5

32.2.1 6 J x 16

Caution

Observe the allocation of wheels and tyres to the respective engines, which are listed in the overview table ⇒ page 246 .

Protected by copyright. Copyright by Volkswagen AG. Volkswagen AG does not guarantee accuracy or liability with respect to the correctness of information in this document. Copyright by Volkswagen AG. Reproduction, in whole or in part, for commercial purposes, in part or in whole, is not permitted unless authorised by Volkswagen AG.
satelettronica

Winter wheels

8P0 601 027 - Wheel and tyre combination ⇒ page 247

Size:	6 J x 16
Wheel offset in mm:	50
Wheel load in kg:	600

Use the following wheel bolt caps for wheel bolts:

- 1K0.601.173 (4 per wheel)
- 1K0.601.173.A (1 per wheel)

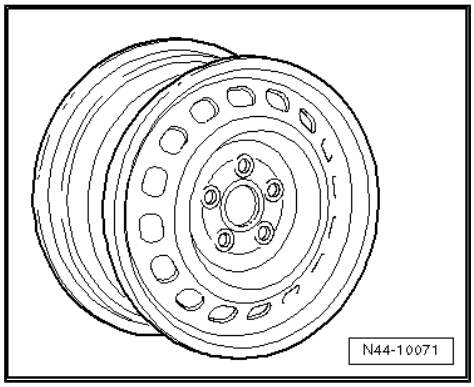

1K0 601 025 Q - Wheel and tyre combination ⇒ page 247

Size:	6 J x 16 EH2 ⇒ page 59
Wheel offset in mm:	50
Wheel load in kg:	615

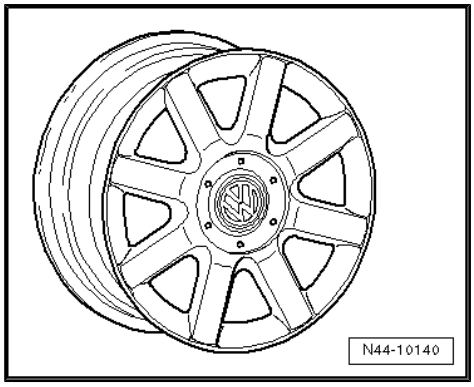

32.2.2 6 1/2 J x 16

Caution

Observe the allocation of wheels and tyres to the respective engines, which are listed in the overview table ⇒ page 246 *.*

1K0 601 027 A - Wheel and tyre combination ⇒ page 247

Size:	6 1/2 J x 16
Wheel offset in mm:	50
Wheel load in kg:	615

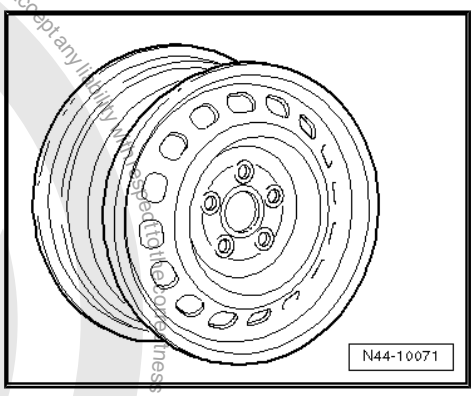

Protected by copyright. Copying for private or commercial purposes, in part or in whole, is not permitted unless authorised by Volkswagen AG. Volkswagen AG does not guarantee or accept any liability with respect to the correctness of information in this document. Copyright by Volkswagen AG.
satelettronica

1K0 601 027 J, 1K0 601 027 K - Wheel and tyre combination ⇒ page 247

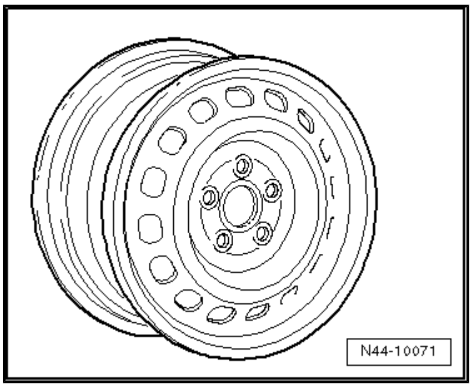

Size:	$6^{1}/_{2}$ J x 16
Wheel offset in mm:	50
Wheel load in kg:	615

1K0 601 025 AJ - Wheel and tyre combination ⇒ page 247

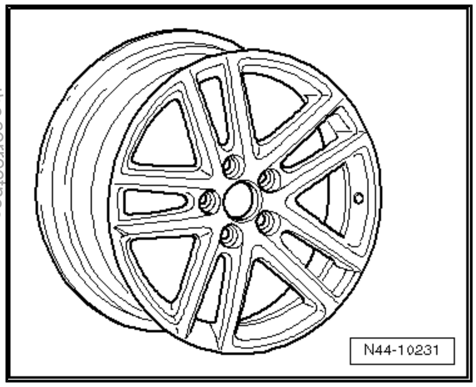

Size:	$6^{1}/_{2}$ J x 16
Wheel offset in mm:	50
Wheel load in kg:	615

1K0 601 025 BC - Wheel and tyre combination ⇒ page 247

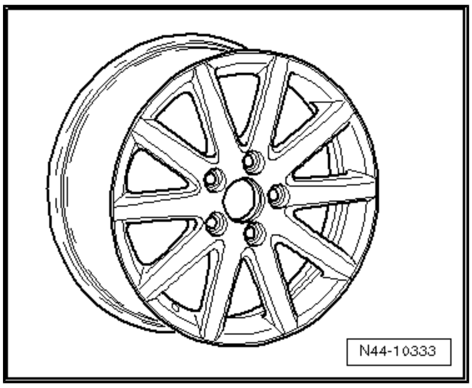

Size:	$6^{1}/_{2}$ J x 16
Wheel offset in mm:	50
Wheel load in kg:	615

1K0 601 025 BM - Wheel and tyre combination ⇒ page 247

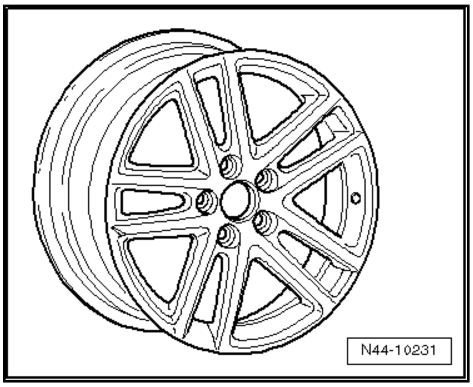

Size:	$6^{1}/_{2}$ J x 16
Wheel offset in mm:	50
Wheel load in kg:	615

Protected by copyright. Copying for private or commercial purposes, in part or in whole, is not permitted unless authorised by Volkswagen AG. Volkswagen AG does not guarantee or accept any liability with respect to the correctness of information in this document. Copyright by Volkswagen AG.
sateletronica

1K0 601 025 BR - Wheel and tyre combination ⇒ page 247

Size:	$6^1/_2$ J x 16
Wheel offset in mm:	50
Wheel load in kg:	615

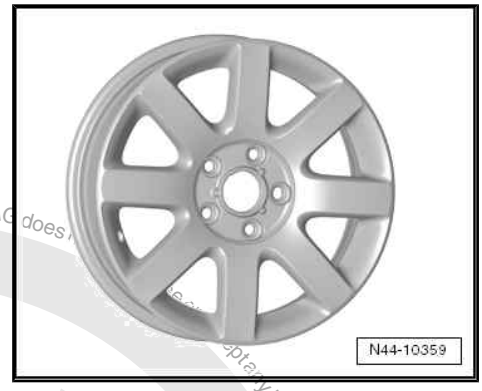

1K0 601 025 BS - Wheel and tyre combination ⇒ page 247

Size:	$6^1/_2$ J x 16
Wheel offset in mm:	50
Wheel load in kg:	615

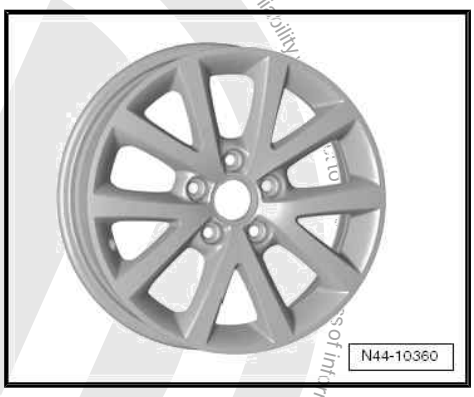

1K0 601 025 CB - Wheel and tyre combination ⇒ page 247

Size:	$6^1/_2$ J x 16
Wheel offset in mm:	50
Wheel load in kg:	615

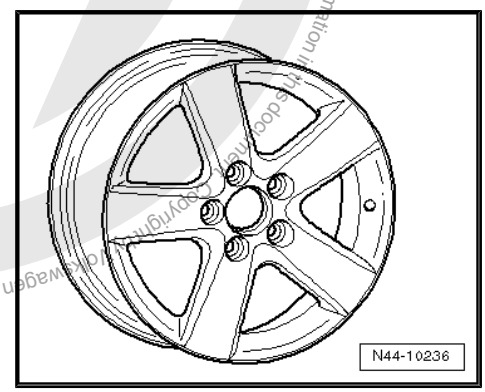

1K0 601 025 CG - Wheel and tyre combination ⇒ page 247

Size:	$6^1/_2$ J x 16
Wheel offset in mm:	50
Wheel load in kg:	615

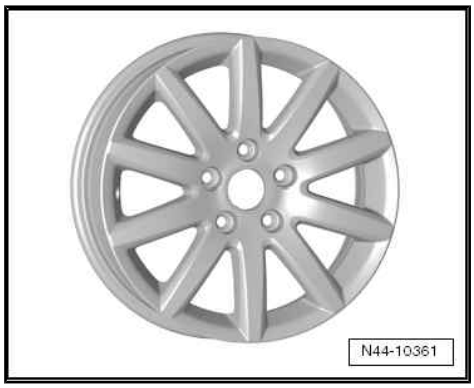

Protected by copyright. Copying for private or commercial purposes, in part or in whole, is not permitted unless authorised by Volkswagen AG. Volkswagen AG does not accept any liability for the accuracy of information in this document. Copyright © Volkswagen AG.

satelettronica

1K0 601 025 P - Wheel and tyre combination ⇒ page 247

Size:	$6^1/_2$ J x 16
Wheel offset in mm:	50
Wheel load in kg:	615

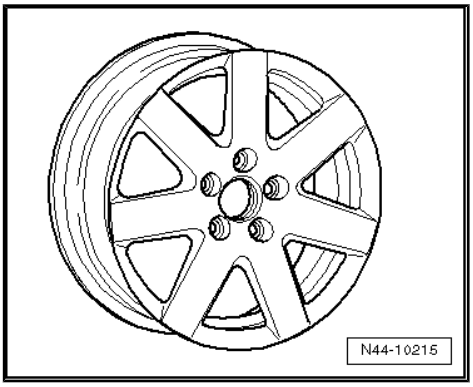

1K0 601 025 R - Wheel and tyre combination ⇒ page 247

Size:	$6^1/_2$ J x 16
Wheel offset in mm:	50
Wheel load in kg:	615

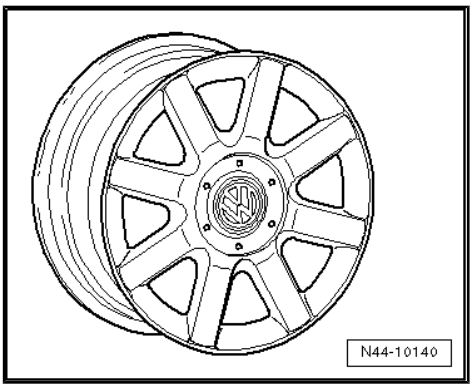

1T0 601 025 C - Wheel and tyre combination ⇒ page 247

Size:	$6^1/_2$ J x 16
Wheel offset in mm:	50
Wheel load in kg:	615

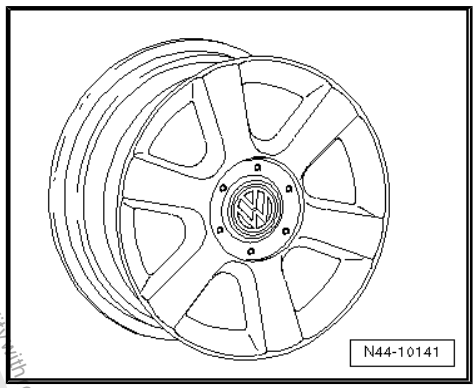

1T0 601 025 G, 1T0 601 025 K - Wheel and tyre combination ⇒ page 247

Size:	$6^1/_2$ J x 16
Wheel offset in mm:	50
Wheel load in kg:	615

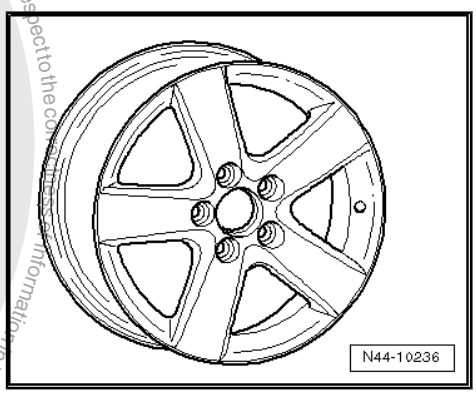

Protected by copyright. Copying for private or commercial purposes, in part or in whole, is not permitted unless authorised by Volkswagen AG. Volkswagen AG does not guarantee or accept any liability with respect to the correctness of information in this document. Copyright by Volkswagen AG.
satelettronica

1T0 601 025 M - Wheel and tyre combination ⇒ page 247

Size:	$6^1/_2$ J x 16
Wheel offset in mm:	50
Wheel load in kg:	615

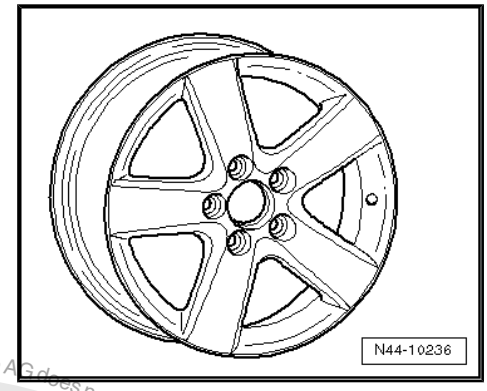

1T0 601 025 R - Wheel and tyre combination ⇒ page 247

Size:	$6^1/_2$ J x 16
Wheel offset in mm:	50
Wheel load in kg:	615

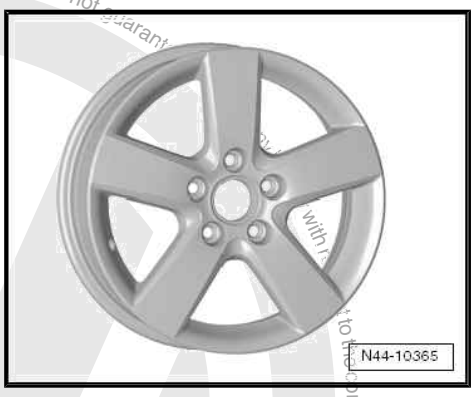

32.2.3 6 J x 17

Caution

Observe the allocation of wheels and tyres to the respective engines, which are listed in the overview table ⇒ page 246 *.*

Winter wheel

1K0 601 025 N - Wheel and tyre combination ⇒ page 247

Size:	6 J x 17
Wheel offset in mm:	48.5
Wheel load in kg:	615

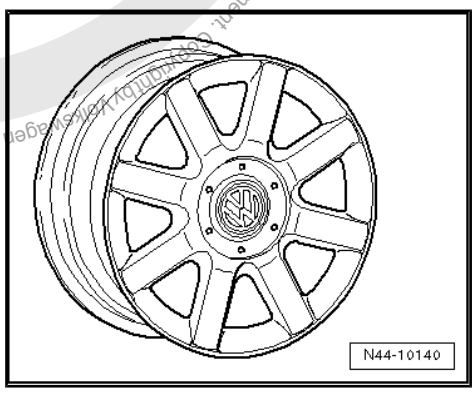

32.2.4 7 J x 17

Caution

Observe the allocation of wheels and tyres to the respective engines, which are listed in the overview table ⇒ page 246 *.*

Protected by copyright. Copying for private or commercial purposes, in part or in whole, is not permitted unless authorised by Volkswagen AG. Volkswagen AG does not guarantee the correctness of information in this document. Copyright by Volkswagen AG.
satelettronica

1K0 601 025 B - Wheel and tyre combination ⇒ page 247

Size:	7 J x 17
Wheel offset in mm:	54
Wheel load in kg:	615

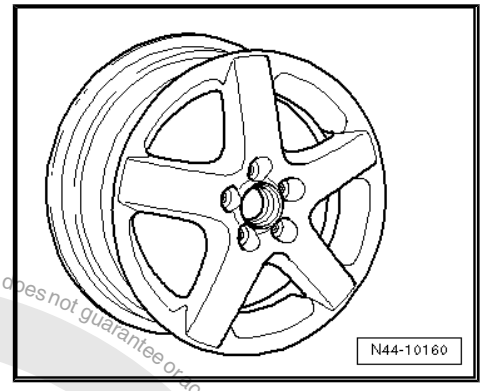

1K0 601 025 C - Wheel and tyre combination ⇒ page 247

Size:	7 J x 17
Wheel offset in mm:	54
Wheel load in kg:	615

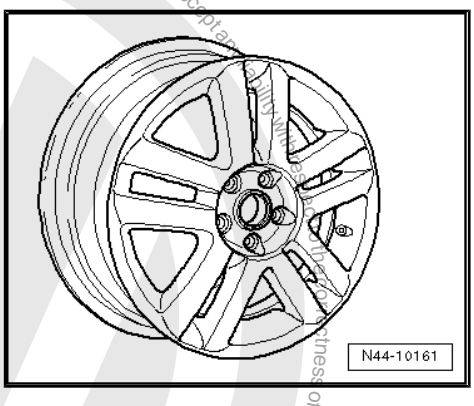

1K0 601 025 J - Wheel and tyre combination ⇒ page 247

Size:	7 J x 17
Wheel offset in mm:	54
Wheel load in kg:	615

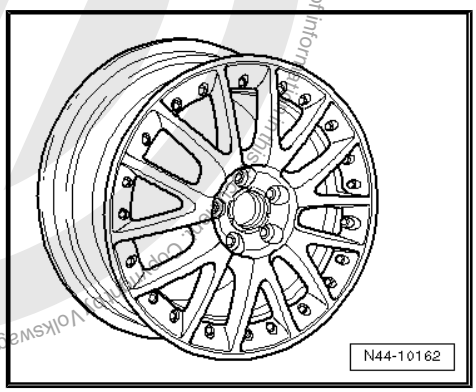

1K0 601 025 K - Wheel and tyre combination ⇒ page 247

Size:	7 J x 17
Wheel offset in mm:	54
Wheel load in kg:	615

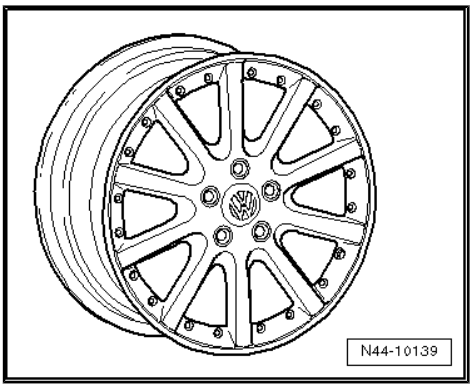

Protected by copyright. Copying for private or commercial purposes, in part or in whole, is not permitted unless authorised by Volkswagen AG. Volkswagen AG does not guarantee or accept any liability with respect to the correctness of information.
Copyright by Volkswagen AG.
satelettronica

1K0 601 025 M - Wheel and tyre combination ⇒ page 247

Size:	7 J x 17
Wheel offset in mm:	54
Wheel load in kg:	615

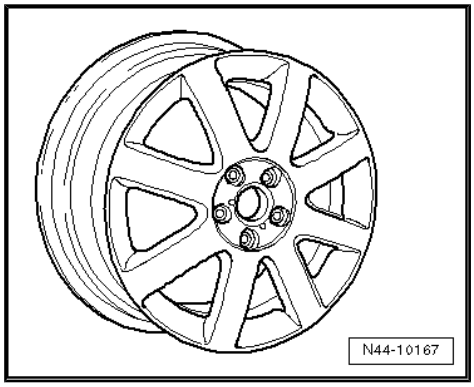

1K0 601 025 T - Wheel and tyre combination ⇒ page 247

Size:	7 J x 17
Wheel offset in mm:	54
Wheel load in kg:	615

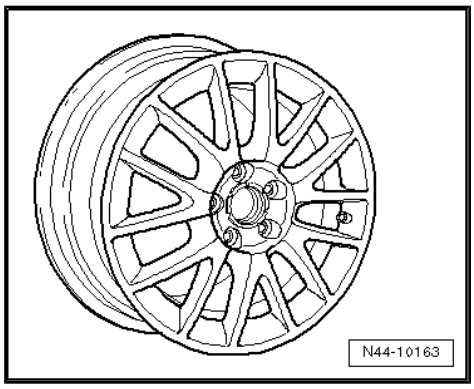

1K0 601 025 AF - Wheel and tyre combination ⇒ page 247

Size:	7 J x 17
Wheel offset in mm:	54
Wheel load in kg:	630

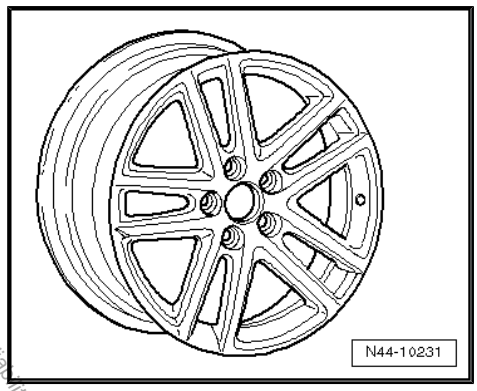

1K0 601 025 AE - Wheel and tyre combination ⇒ page 247

Size:	7 J x 17
Wheel offset in mm:	54
Wheel load in kg:	630

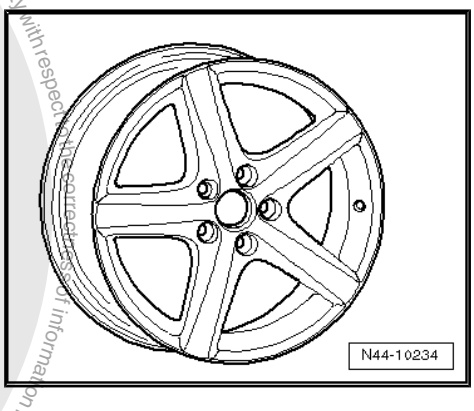

Protected by copyright. Copying for private or commercial purposes, in part, is not permitted unless authorised by Volkswagen AG. Volkswagen AG does not guarantee or accept any liability with respect to the correctness of information in this document. Copyright by Volkswagen AG.

satelettronica

1K0 601 025 AN - Wheel and tyre combination ⇒ page 247

Size:	7 J x 17
Wheel offset in mm:	54
Wheel load in kg:	615

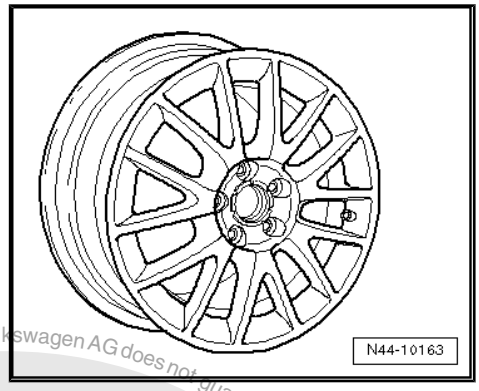

32.2.5 7 1/2 J x 17

Caution

Observe the allocation of wheels and tyres to the respective engines, which are listed in the overview table ⇒ page 246 *.*

1K0 601 025 AC - Wheel and tyre combination ⇒ page 247

Size:	7 1/2 J x 17
Wheel offset in mm:	51
Wheel load in kg:	615

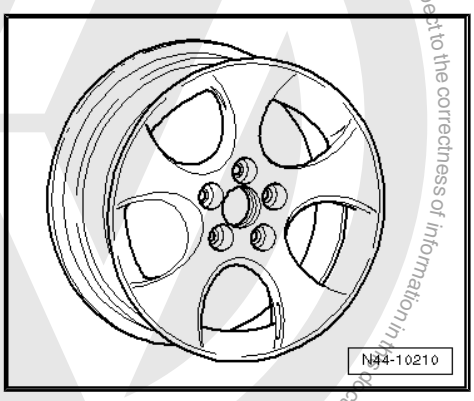

1K0 601 025 BB - Wheel and tyre combination ⇒ page 247

Size:	7 1/2 J x 17
Wheel offset in mm:	51
Wheel load in kg:	615

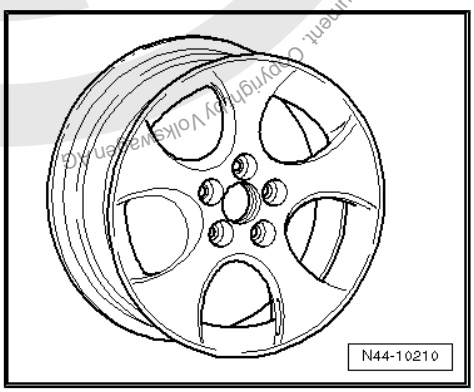

1K0 601 025 BK - Wheel and tyre combination ⇒ page 247

Size:	7 1/2 J x 17
Wheel offset in mm:	51
Wheel load in kg:	615

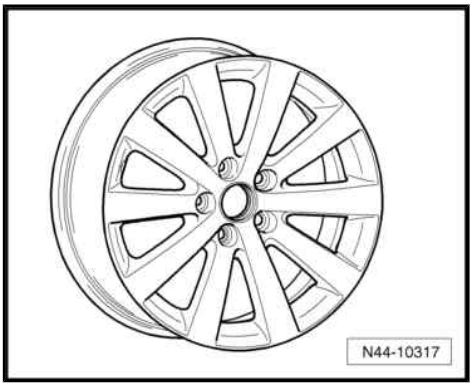

Protected by copyright. Copyright by Volkswagen AG.
Copyright by Volkswagen AG. Volkswagen AG does not guarantee or accept any liability with respect to the correctness of information in this document. Copying for private or commercial purposes, in part or whole, is not permitted unless authorised by Volkswagen AG.
satelettronica

32.2.6 7 1/2 J x 18

Caution

Observe the allocation of wheels and tyres to the respective engines, which are listed in the overview table ⇒ page 246 *.*

1K0 601 025 BT - Wheel and tyre combination ⇒ page 246

Size:	7 1/2 J x 18
Wheel offset in mm:	51
Wheel load in kg:	630

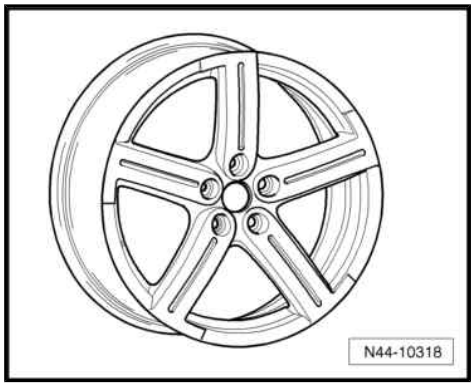

1K0 601 025 AD - Wheel and tyre combination ⇒ page 246

Size:	7 1/2 J x 18
Wheel offset in mm:	51
Wheel load in kg:	630

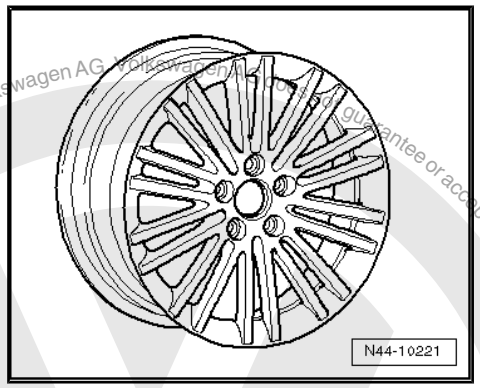

1K0 601 025 AG - Wheel and tyre combination ⇒ page 246

Size:	7 1/2 J x 18
Wheel offset in mm:	51
Wheel load in kg:	630

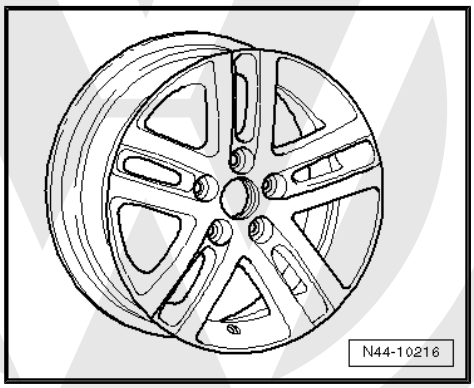

1K0 601 025 AH - Wheel and tyre combination ⇒ page 246

Size:	7 1/2 J x 18
Wheel offset in mm:	51
Wheel load in kg:	615

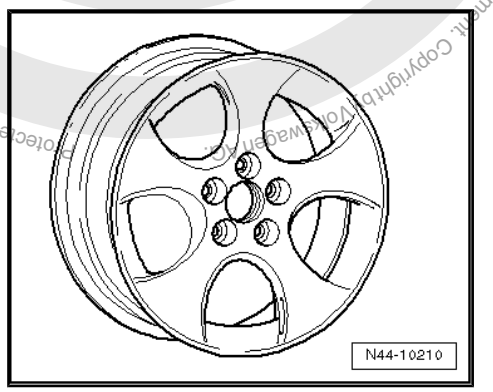

satelettronica
Copyright by Volkswagen AG. Volkswagen AG does not guarantee or accept any liability with respect to the correctness of information in this document. Copying for private or commercial purposes, in part or in whole, is not permitted unless authorised by Volkswagen AG. Protected by copyright. Copyright by Volkswagen AG.

Protected by copyright. Copying for private or commercial purposes, in part or in whole, is not permitted unless authorised by Volkswagen AG. Volkswagen AG does not guarantee or accept any liability with respect to the correct

1K0 601 025 AM - Wheel and tyre combination ⇒ page 246

Size:	$7^1/_2$ J x 18
Wheel offset in mm:	51
Wheel load in kg:	615

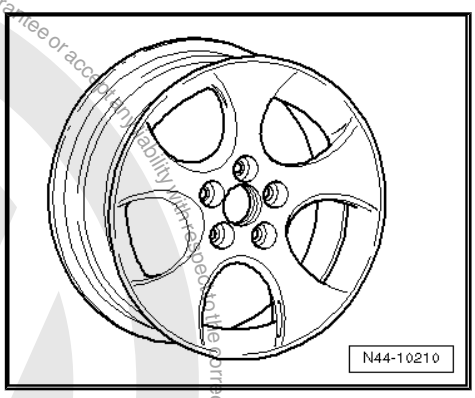

1K0 601 025 AT, 1K0 601 025 CC - Wheel and tyre combination ⇒ page 246

Size:	$7^1/_2$ J x 18
Wheel offset in mm:	51
Wheel load in kg:	615

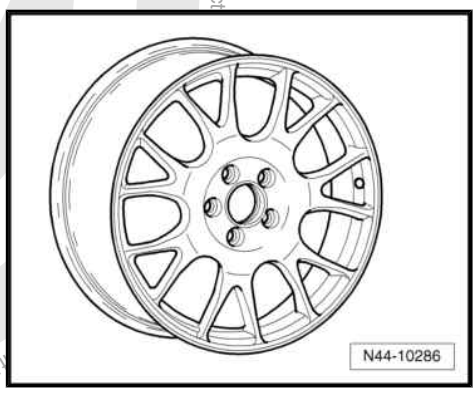

1K0 601 025 BA - Wheel and tyre combination ⇒ page 246

Size:	$7^1/_2$ J x 18
Wheel offset in mm:	51
Wheel load in kg:	615

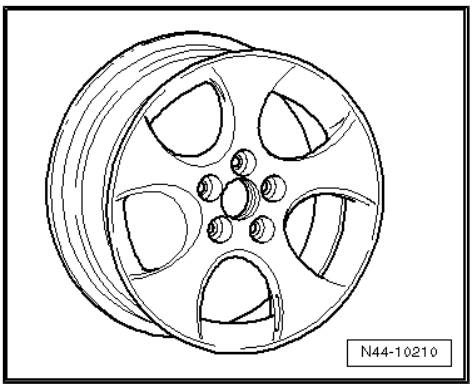

1K0 601 025 BE - Wheel and tyre combination ⇒ page 246

Size:	$7^1/_2$ J x 18
Wheel offset in mm:	51
Wheel load in kg:	615

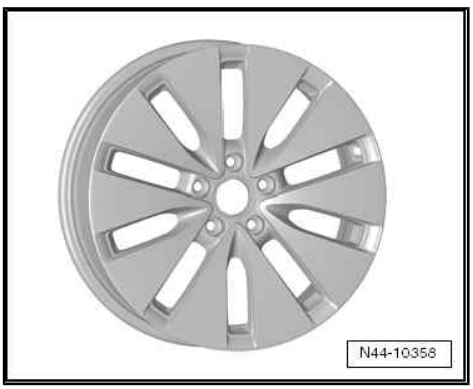

satelettronica

1K0 601 025 BL - Wheel and tyre combination ⇒ page 246

Size:	$7^1/_2$ J x 18
Wheel offset in mm:	51
Wheel load in kg:	615

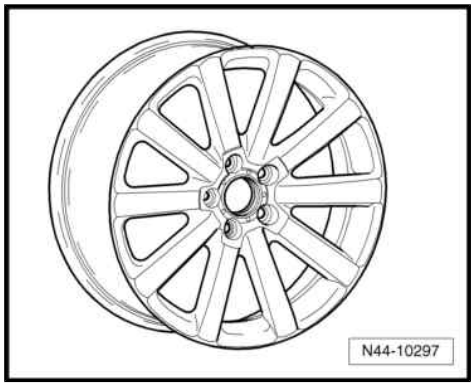

Protected by copyright. Copying for private or commercial purposes, in part or in whole, is not permitted unless authorised by Volkswagen AG. Volkswagen AG does not guarantee or accept any liability with respect to the correctness of information in this document. Copyright by Volkswagen AG.

satelettronica

33 Golf R32 model year 2006 to model year 2009

General

Volkswagen vehicles are built according to the latest findings in safety engineering. To keep it that way, we recommend the use of only genuine Volkswagen spare parts. You can recognise this by the VW Audi logo and by the part number. It has been established that these parts are reliable, safe and suitable.

Despite constant appraisal of the market, we cannot assess other products on these points, even when in isolated cases they have been passed by official inspectors or have been granted official approval. Therefore, we cannot, of course, assume any liability if these products are installed.

> ⚠ **WARNING**
>
> *The products from Volkswagen genuine parts and Votex genuine accessories may differ in fitting requirements, torque specifications and so on.*
>
> *Always follow the respective fitting and operating instructions.*

The wheel and tyre combinations or changes listed in the vehicle tables refer exclusively to Volkswagen Genuine wheels. Approval of wheel and tyre combinations or a change to wheels from the accessories trade is not possible with the parts certificate attached here.

> ⚠ **WARNING**
>
> *The fitting instructions and torque specifications for wheels from Votex genuine accessories may differ from those intended for wheels from Volkswagen genuine parts.*
>
> *Therefore, always observe the torque settings for the wheel bolts as well as the respective fitting and operating instructions.*

33.1 Golf R32, type 1K model year 2006 to model year 2009

Appendix for parts certificate 2066/08

The parts certificate can be found on the Volkswagen ServiceNet under Technology; Guides; Wheels and Tyres Guide.

Type Approval No.: e1*2001/116*0242*11 to e1*2001/116*0242*24

Overview

Model engine output	Tyres	Tyre size	Wheel rim	Off-set in mm	Snow chains	Remarks
3.2l 184 kW; petrol engine	Standard tyres	225/40 R 18 92Y	$7^1/_2$ J x 18 ⇒ page 263	51	No	General information on: ◆ Winter tyres ⇒ page 15 ◆ Snow chains ⇒ page 18

Protected by copyright. Copyright by Volkswagen AG. Volkswagen AG does not guarantee or accept any liability with respect to the correctness of information in this document. Copying and permitted only with the express authorised by Volkswagen AG.
satelettronica

Model engine output	Tyres	Tyre size	Wheel rim	Off-set in mm	Snow chains	Remarks
	Modification	225/45 R 17 94W	7 J x 17 ⇒ page 261	54	No	Tyre makes recommended by Volkswagen: ◆ Summer tyres ⇒ page 647 ◆ Winter tyres ⇒ page 684
	Winter tyres	205/50 R 17 93Q/T/H	6 J x 17 ⇒ page 260	48.5	Yes* ⇒ page 260	* Only fine-link snow chains, which do not add more than 8 mm may be used ⇒ page 260

Tyre inflation pressures are located on a sticker in the fuel tank flap or in ⇒ Maintenance ; Booklet ; Check tyres: condition, profile, inflation pressure, depth of tread .

Approved snow chains for 6 J x 17 offset 48.5 wheel rim

The following snow chains are only permissible in combination with the adjacent wheel and tyre combination!

Chain manufacturer Item no.	Accessory part number	Tyre size	Wheel rim	Part no.
Ottinger 100 956	-	205/50 R 17 93Q/T/H	6 J x 17 offset 48.5	1K0 601 025 N

33.2 Wheel allocation for Golf R32, type 1K model year 2006 to model year 2009

Explanation of information on wheels ⇒ page 59

Torque settings for wheel bolts ⇒ Running gear, axles, steering; Rep. gr. 44 ; Torque settings for fitting wheels

Pitch circle diameter: 112 mm

Number of wheel bolt holes: 5

33.2.1 6 J x 17

Caution

Observe the allocation of wheels and tyres to the respective engines, which are listed in the overview table ⇒ page 232 .

Protected by copyright. Copying for private or commercial purposes, in part or in whole, is not permitted unless authorised by Volkswagen AG. Volkswagen AG does not guarantee or accept any liability with respect to the correctness of information in this document. Copyright by Volkswagen AG.
satelettronica

Winter wheel

1K0 601 025 N - Wheel and tyre combination ⇒ page 260

Size:	6 J x 17
Wheel offset in mm:	48,5
Wheel load in kg:	615

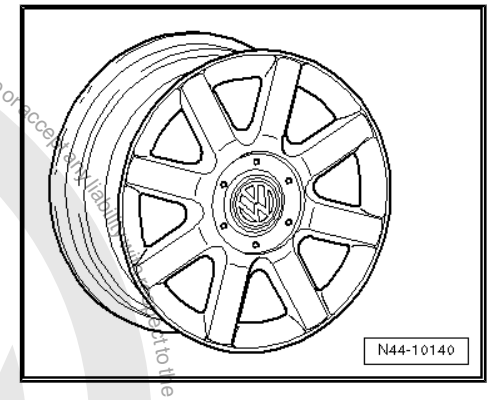

33.2.2 7 J x 17

Caution

Observe the allocation of wheels and tyres to the respective engines, which are listed in the overview table ⇒ page 259 ***.***

1K0 601 025 B - Wheel and tyre combination ⇒ page 260

Size:	7 J x 17
Wheel offset in mm:	54
Wheel load in kg:	615

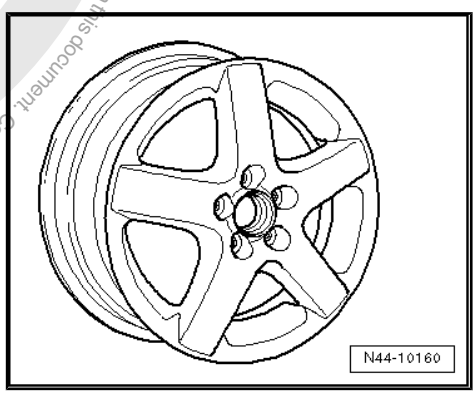

1K0 601 025 C - Wheel and tyre combination ⇒ page 260

Size:	7 J x 17
Wheel offset in mm:	54
Wheel load in kg:	615

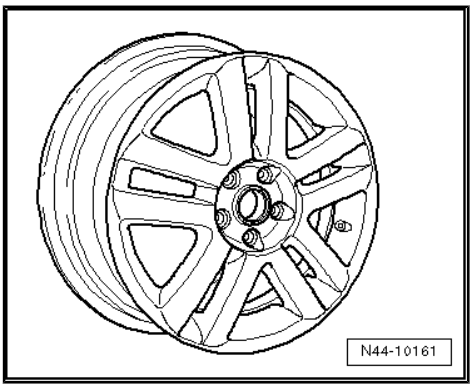

Protected by copyright. Copying for private or commercial purposes, in part or in whole, is not permitted unless authorised by Volkswagen AG. Volkswagen AG does not guarantee or accept any liability with respect to the correctness of information in this document. Copyright by Volkswagen AG.
satelettronica

1K0 601 025 J - Wheel and tyre combination ⇒ page 260

Size:	7 J x 17
Wheel offset in mm:	54
Wheel load in kg:	615

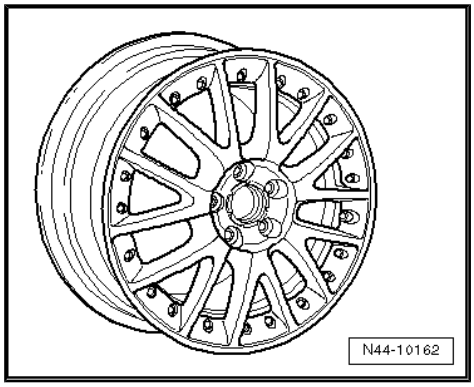

1K0 601 025 K - Wheel and tyre combination ⇒ page 260

Size:	7 J x 17
Wheel offset in mm:	54
Wheel load in kg:	615

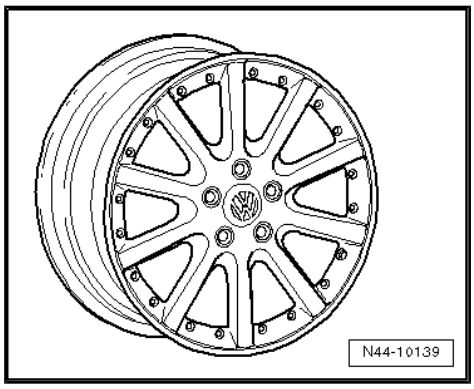

1K0 601 025 M - Wheel and tyre combination ⇒ page 260

Size:	7 J x 17
Wheel offset in mm:	54
Wheel load in kg:	615

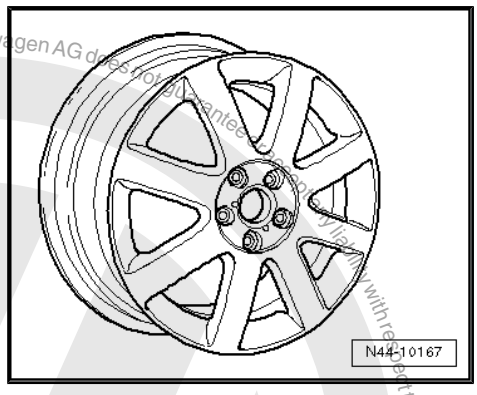

1K0 601 025 T - Wheel and tyre combination ⇒ page 260

Size:	7 J x 17
Wheel offset in mm:	54
Wheel load in kg:	615

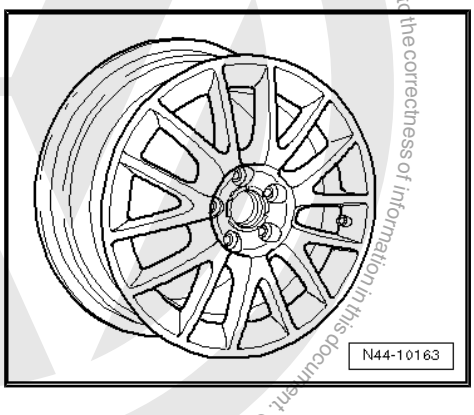

Protected by copyright. Copyright for private or commercial purposes, in part or in whole, is not permitted unless authorised by Volkswagen AG. Volkswagen AG does not guarantee or assume any liability with respect to the correctness of information in this document. Copyright by Volkswagen AG.
satelettronica

1K0 601 025 AF - Wheel and tyre combination ⇒ page 260

Size:	7 J x 17
Wheel offset in mm:	54
Wheel load in kg:	630

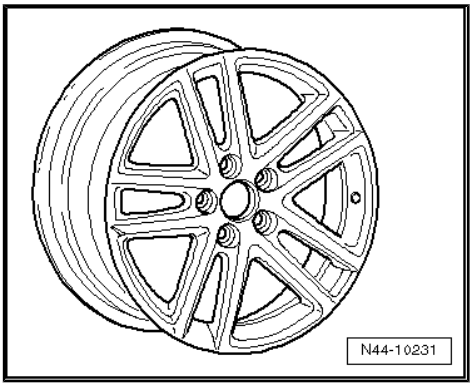

1K0 601 025 AE - Wheel and tyre combination ⇒ page 260

Size:	7 J x 17
Wheel offset in mm:	54
Wheel load in kg:	630

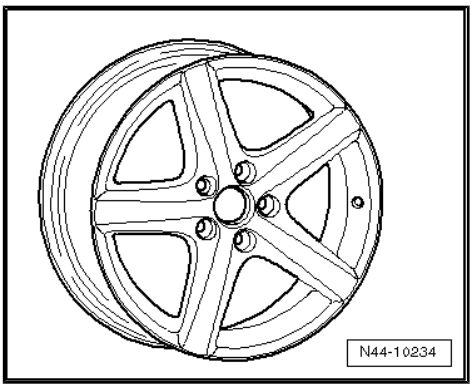

1K0 601 025 AN - Wheel and tyre combination ⇒ page 260

Size:	7 J x 17
Wheel offset in mm:	54
Wheel load in kg:	615

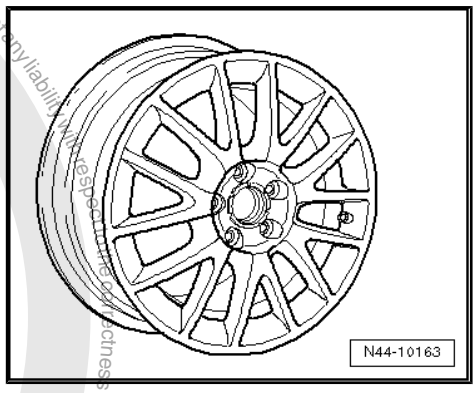

33.2.3 7 1/2 J x 18

Caution

Observe the allocation of wheels and tyres to the respective engines, which are listed in the overview table ⇒ page 259 *.*

1K0 601 025 AD - Wheel and tyre combination ⇒ page 259

Size:	7 1/2 J x 18
Wheel offset in mm:	51
Wheel load in kg:	630

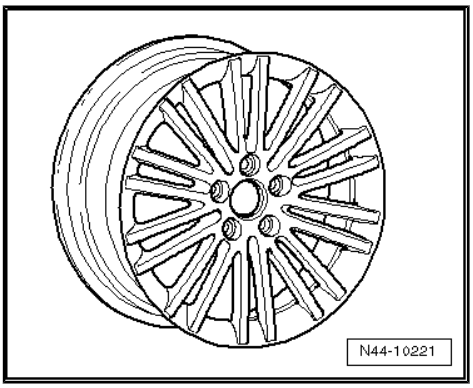

Protected by copyright. Copying for private or commercial purposes, in part or in whole, is not permitted unless authorised by Volkswagen AG. Volkswagen AG does not guarantee or accept any liability with respect to the correctness of information in this document. Copyright by Volkswagen AG.
satelettronica

1K0 601 025 AG - Wheel and tyre combination ⇒ page 259

Size:	$7^1/_2$ J x 18
Wheel offset in mm:	51
Wheel load in kg:	630

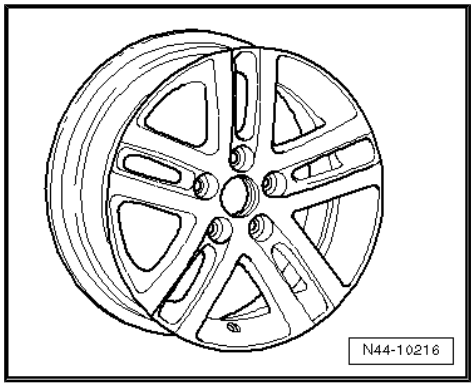

1K0 601 025 AH - Wheel and tyre combination ⇒ page 259

Size:	$7^1/_2$ J x 18
Wheel offset in mm:	51
Wheel load in kg:	615

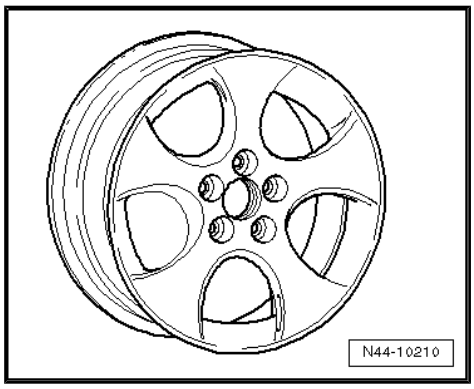

1K0 601 025 AM - Wheel and tyre combination ⇒ page 259

Size:	$7^1/_2$ J x 18
Wheel offset in mm:	51
Wheel load in kg:	615

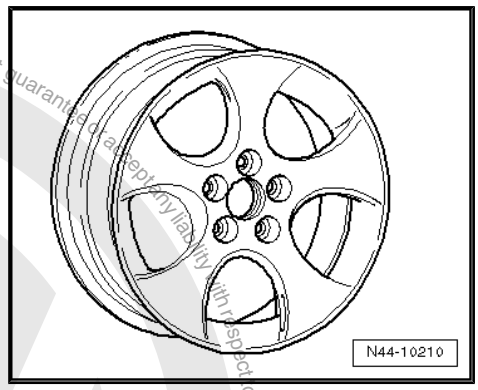

1K0 601 025 AT, 1K0 601 025 CC - Wheel and tyre combination ⇒ page 259

Size:	$7^1/_2$ J x 18
Wheel offset in mm:	51
Wheel load in kg:	615

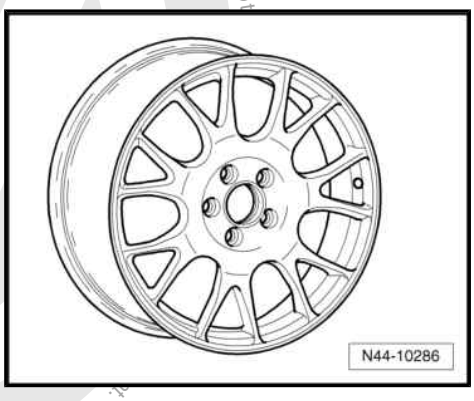

Protected by copyright. Copying for private or commercial purposes, in part or in whole, is not permitted unless authorised by Volkswagen AG. Volkswagen AG does not guarantee or accept any liability with respect to the
Copyright by Volkswagen AG.
satelettronica

1K0 601 025 BA - Wheel and tyre combination ⇒ page 259

Size:	$7^1/_2$ J x 18
Wheel offset in mm:	51
Wheel load in kg:	615

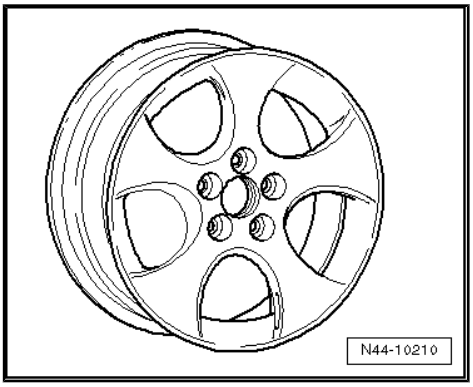

1K0 601 025 BE - Wheel and tyre combination ⇒ page 259

Size:	$7^1/_2$ J x 18
Wheel offset in mm:	51
Wheel load in kg:	615

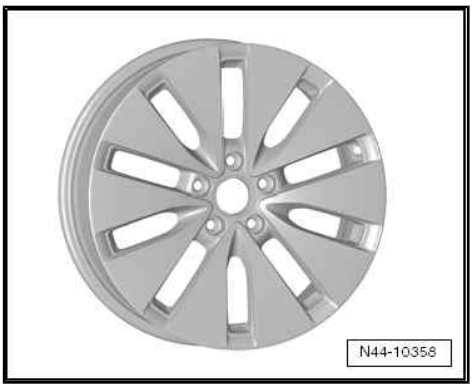

1K0 601 025 BL - Wheel and tyre combination ⇒ page 259

Size:	$7^1/_2$ J x 18
Wheel offset in mm:	51
Wheel load in kg:	615

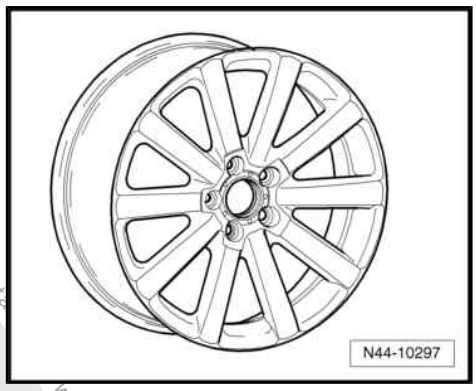

Protected by copyright. Copying for private or commercial purposes, in part or in whole, is not permitted unless authorised by Volkswagen AG. Volkswagen AG does not guarantee or accept any liability with respect to the correctness of information in this document. Copyright by Volkswagen AG.
satelettronica

34 CrossGolf from model year 2007

General

Volkswagen vehicles are built according to the latest findings in safety engineering. To keep it that way, we recommend the use of only genuine Volkswagen spare parts. You can recognise this by the VW Audi logo and by the part number. It has been established that these parts are reliable, safe and suitable.

Despite constant appraisal of the market, we cannot assess other products on these points, even when in isolated cases they have been passed by official inspectors or have been granted official approval. Therefore, we cannot, of course, assume any liability if these products are installed.

> ⚠ **WARNING**
>
> *The products from Volkswagen genuine parts and Votex genuine accessories may differ in fitting requirements, torque specifications and so on.*
>
> *Always follow the respective fitting and operating instructions.*

The wheel and tyre combinations or changes listed in the vehicle tables refer exclusively to Volkswagen Genuine wheels. Approval of wheel and tyre combinations or a change to wheels from the accessories trade is not possible with the parts certificate attached here.

> ⚠ **WARNING**
>
> *The fitting instructions and torque specifications for wheels from Votex genuine accessories may differ from those intended for wheels from Volkswagen genuine parts.*
>
> *Therefore, always observe the torque settings for the wheel bolts as well as the respective fitting and operating instructions.*

34.1 CrossGolf, type 1KP model year 2007 to model year 2009

Appendix for parts certificate 2066/08

The parts certificate can be found on the Volkswagen ServiceNet under Technology; Guides; Wheels and Tyres Guide.

Type Approval No.: e1*2001/116*0304*07 to e1*2001/116*0304*13

Overview

Model engine output	Tyres	Tyre size	Wheel rim	Off-set in mm	Snow chains	Remarks
1.9l 77 kW TDI diesel engine	Standard tyres	225/45 R 17 91W	7 J x 17 ⇒ page 276	47	No	General information on: ◆ Winter tyres ⇒ page 15 ◆ Snow chains ⇒ page 18
	Modification	195/65 R 15 91T/H/V	6 J x 15 ⇒ page 269	47	Yes	Tyre makes recommended by Volkswagen:

Protected by copyright. Copying for private or commercial purposes, in part or whole, is not permitted unless authorised by Volkswagen AG. Volkswagen AG does not guarantee or accept any liability with respect to the correctness of information in this document. Copyright by Volkswagen AG.

satelettronica

Model engine output	Tyres	Tyre size	Wheel rim	Off-set in mm	Snow chains	Remarks
		195/65 R 15 91T/H/V	$6^1/_2$ J x 15 ⇒ page 270	50	Yes	◆ Summer tyres ⇒ page 647 ◆ All-season tyres ⇒ page 669 ◆ Winter tyres ⇒ page 684
		205/60 R 15 91T/H/V	6 J x 15 ⇒ page 269	47	Yes	
		205/55 R 16 91T/H/V	$6^1/_2$ J x 16 ⇒ page 272	50	No	
		225/45 R 17 91T/H/V	7 J x 17 ⇒ page 277	54	No	
		225/45 R 17 91W	$7^1/_2$ J x 17 ⇒ page 279	47	No	
	Winter tyres	195/65 R 15 91T/H/V	6 J x 15 ⇒ page 269	47	Yes	
		205/55 R 16 91Q/T/H	6 J x 16 ⇒ page 271	50	Yes	
1.6l 75 kW petrol engine with manual gearbox	Standard tyres	225/45 R 17 91W	7 J x 17 ⇒ page 276	47	No	
	Modification	195/65 R 15 91T/H/V	6 J x 15 ⇒ page 269	47	Yes	
		195/65 R 15 91T/H/V	$6^1/_2$ J x 15 ⇒ page 270	50	Yes	
		205/60 R 15 91T/H/V	6 J x 15 ⇒ page 269	47	Yes	
		205/55 R 16 91H/V	$6^1/_2$ J x 16 ⇒ page 272	50	No	
		225/45 R 17 91H/V	7 J x 17 ⇒ page 277	54	No	
		225/45 R 17 91W	$7^1/_2$ J x 17 ⇒ page 279	47	No	
	Winter tyres	195/65 R 15 91T/H/V	6 J x 15 ⇒ page 269	47	Yes	
		205/55 R 16 91Q/T/H	6 J x 16 ⇒ page 271	50	Yes	
1.6l 75 kW petrol engine with automatic gear-box	Standard tyres	225/45 R 17 91H/V	7 J x 17 ⇒ page 277	54	No	

Volkswagen AG. Volkswagen AG does not guarantee or accept any liability with respect to the correctness of information in this document. Copyright by Volkswagen AG. Protected by copyright. Reproduction, distribution or publishing for private or commercial purposes, in part or in whole, is not permitted unless authorised by Volkswagen AG.

satelettronica

Model engine output	Tyres	Tyre size	Wheel rim	Off-set in mm	Snow chains	Remarks
	Modification	195/65 R 15 91T/H/V	6 J x 15 ⇒ page 269	47	Yes	
		195/65 R 15 91T/H/V	6 1/2 J x 15 ⇒ page 270	50	Yes	
		205/60 R 15 91T/H/V	6 J x 15 ⇒ page 269	47	Yes	
		205/55 R 16 91H/V	6 1/2 J x 16 ⇒ page 272	50	No	
	Winter tyres	195/65 R 15 91T/H/V	6 J x 15 ⇒ page 269	47	Yes	
		205/55 R 16 91Q/T/H	6 J x 16 ⇒ page 271	50	Yes	
1.4l 103 kW petrol engine; 2.0l 103 kW TDI; diesel engine	Standard tyres	225/45 R 17 91W	7 J x 17 ⇒ page 276	47	No	
	Modification	195/65 R 15 91H/V	6 J x 15 ⇒ page 269	47	Yes	
		195/65 R 15 91H/V	6 1/2 J x 15	50	Yes	
		205/60 R 15 91H/V	6 J x 15 ⇒ page 269	47	Yes	
		205/55 R 16 91H/V	6 1/2 J x 16 ⇒ page 277	50	No	
		225/45 R 17 91H/V	7 J x 17 ⇒ page 277	54	No	
		225/45 R 17 91W	7 1/2 J x 17 ⇒ page 279	47	No	
	Winter tyres	195/65 R 15 91T/H/V	6 J x 15 ⇒ page 269	47	Yes	
		205/55 R 16 91Q/T/H	6 J x 16 ⇒ page 271	50	Yes	
1.4l 118 kW petrol engine	Standard tyres	225/45 R 17 91W	7 J x 17 ⇒ page 276	47	No	
	Modification	205/55 R 16 91V	6 1/2 J x 16 ⇒ page 277	50	No	
		225/45 R 17 91V/W	7 J x 17 ⇒ page 277	54	No	

Protected by copyright. Copyright by Volkswagen AG. Volkswagen AG does not guarantee or accept any liability with respect to the correctness of information in this document. Copying for private or commercial purposes, in part or in whole, is not permitted unless authorised by Volkswagen AG.

satelettronica

Model engine output	Tyres	Tyre size	Wheel rim	Off-set in mm	Snow chains	Remarks
		225/45 R 17 91W	7 1/2 J x 17 ⇒ page 279	47	No	
	Winter tyres	205/55 R 16 91Q/T/H	6 J x 16 ⇒ page 271	50	Yes	
		205/50 R 17 93Q/T/H	6 J x 17 ⇒ page 276	48,5	Yes	.

Tyre inflation pressures are located on a sticker in the fuel tank flap or in ⇒ Maintenance ; Booklet ; Check tyres: condition, profile, inflation pressure, depth of tread .

34.2 Wheel allocation for CrossGolf, type 1KP model year 2007 to model year 2009

Explanation of information on wheels ⇒ page 59

Torque specifications for wheel bolts ⇒ Running gear, axles, steering; Rep. gr. 44 ; Torque specifications for fitting wheels

Pitch circle diameter:	112 mm
Number of wheel bolt holes:	5

34.2.1 6 J x 15

Caution

Observe the allocation of wheels and tyres to the respective engines, which are listed in the overview table ⇒ page 266 .

1K0 601 027 C, 1K0 601 027 H - Wheel and tyre combination ⇒ page 266

Size:	6 J x 15
Wheel offset in mm:	47
Wheel load in kg:	615

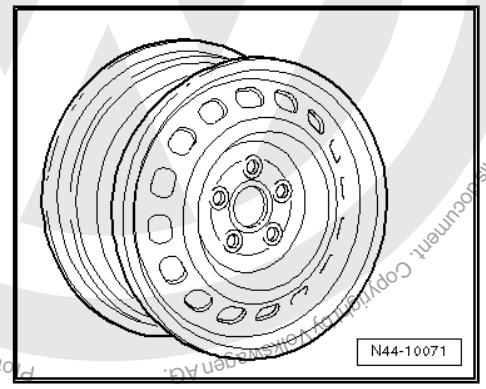

Protected by copyright. Copying for private or commercial purposes, in part or in whole, is not permitted unless authorised by Volkswagen AG. Volkswagen AG does not guarantee or accept any liability with respect to the correctness of information in this document. Copyright by Volkswagen AG.
satelettronica

1K0 601 027 T - Wheel and tyre combination ⇒ page 266

Size:	6 J x 15
Wheel offset in mm:	47
Wheel load in kg:	615

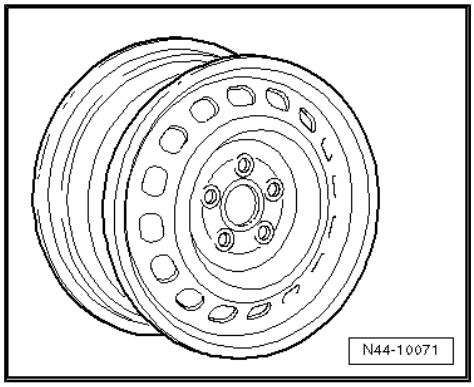

2K0 601 027 - Wheel and tyre combination ⇒ page 266

Size:	6 J x 15
Wheel offset in mm:	47
Wheel load in kg:	650

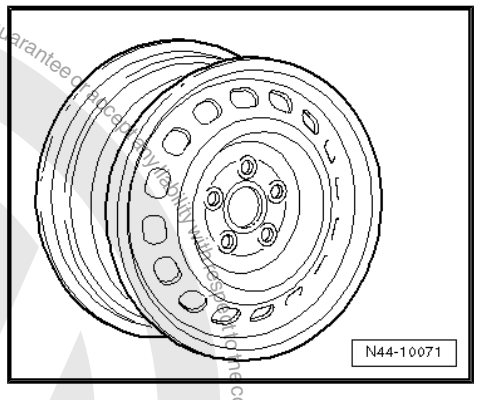

34.2.2 6 1/2 J x 15

> ⚠ **Caution**
>
> *Observe the allocation of wheels and tyres to the respective engines, which are listed in the overview table* *⇒ page 266* *.*

1K0 601 025 A - Wheel and tyre combination ⇒ page 267

Size:	6 1/2 J x 15
Wheel offset in mm:	50
Wheel load in kg:	600

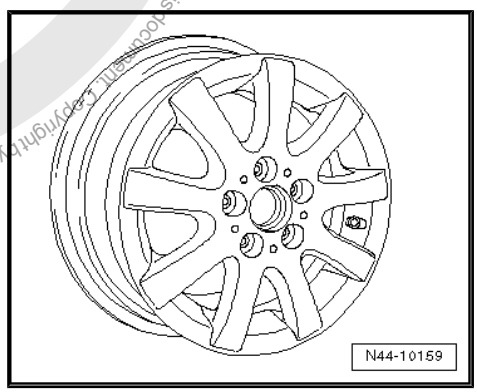

1K0 601 025 AK - Wheel and tyre combination ⇒ page 267

Size:	6 1/2 J x 15
Wheel offset in mm:	50
Wheel load in kg:	600

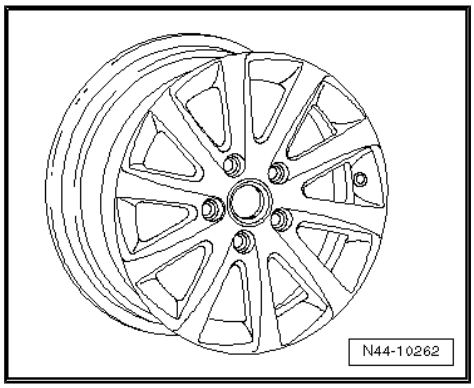

Protected by copyright. Copying for private or commercial purposes, in part or in whole, is not permitted unless authorised by Volkswagen AG. Volkswagen AG does not guarantee or accept any liability with respect to the correctness of information in this document. Copyright by Volkswagen AG.

satelettronica

© 2015 Volkswagen AG. Protected by copyright. Copying for private, commercial purposes, in part or in whole, is not permitted unless authorised by Volkswagen AG. Volkswagen AG does not guarantee or accept any liability with respect to the correctness of information in this document. Copyright by Volkswagen AG.

1K0 601 025 AQ - Wheel and tyre combination ⇒ page 267

Size:	$6^1/_2$ J x 15
Wheel offset in mm:	50
Wheel load in kg:	600

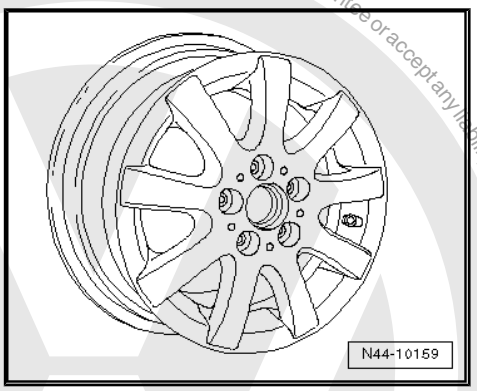

1K0 601 025 CA - Wheel and tyre combination ⇒ page 267

Size:	$6^1/_2$ J x 15
Wheel offset in mm:	50
Wheel load in kg:	600

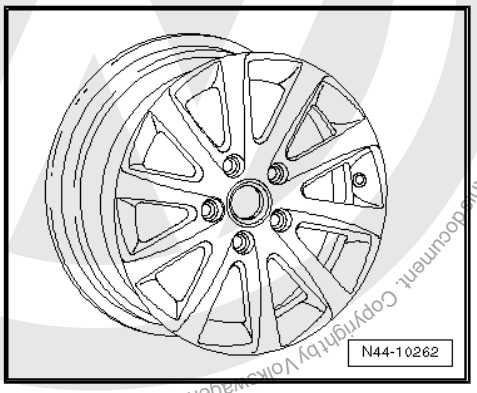

34.2.3 6 J x 16

Caution

Observe the allocation of wheels and tyres to the respective engines, which are listed in the overview table *⇒ page 266* *.*

Winter wheels

8P0 601 027 - Wheel and tyre combination ⇒ page 267

Size:	6 J x 16
Wheel offset in mm:	50
Wheel load in kg:	600

Use the following wheel bolt caps for wheel bolts:

- 1K0.601.173 (4 per wheel)
- 1K0.601.173.A (1 per wheel)

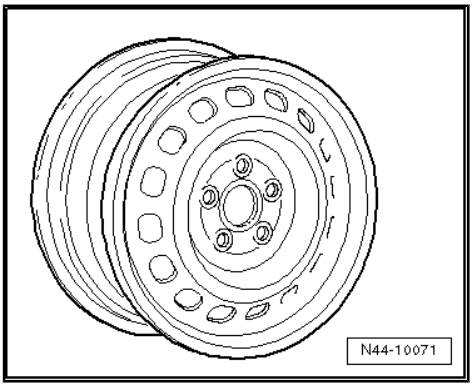

satelettronica

1K0 601 025 Q - Wheel and tyre combination ⇒ page 267

Size:	6 J x 16 EH2 ⇒ page 59
Wheel offset in mm:	50
Wheel load in kg:	615

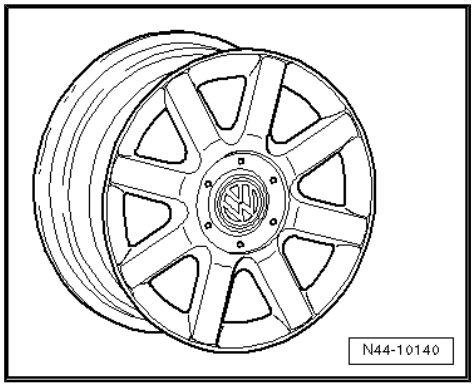

34.2.4 6$^1/_2$ J x 16

Caution

Observe the allocation of wheels and tyres to the respective engines, which are listed in the overview table *⇒ page 266* *.*

1K0 601 027 A - Wheel and tyre combination ⇒ page 267

Size:	6$^1/_2$ J x 16
Wheel offset in mm:	50
Wheel load in kg:	615

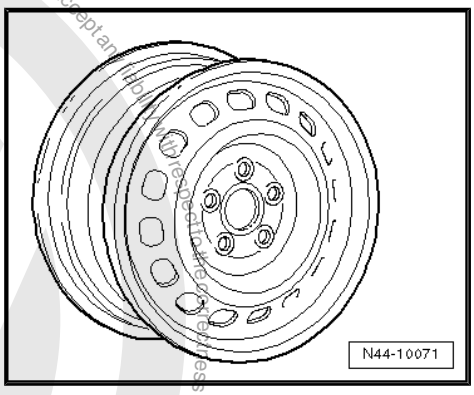

1K0 601 027 J, 1K0 601 027 K - Wheel and tyre combination ⇒ page 267

Size:	6$^1/_2$ J x 16
Wheel offset in mm:	50
Wheel load in kg:	615

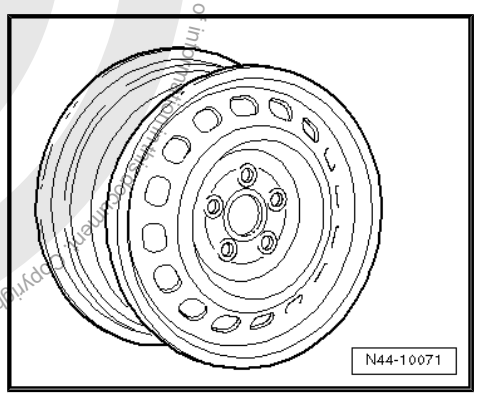

1K0 601 025 AJ - Wheel and tyre combination ⇒ page 267

Size:	6$^1/_2$ J x 16
Wheel offset in mm:	50
Wheel load in kg:	615

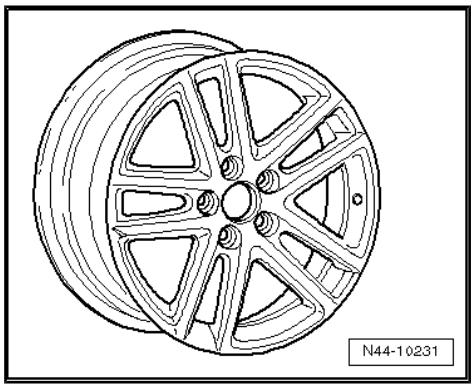

Protected by copyright. Copying for private or commercial purposes, in part or in whole, is not permitted unless authorised by Volkswagen AG. Volkswagen AG does not guarantee or accept any liability with respect to the correctness of information in this document. Copyright by Volkswagen AG.

satelettronica

1K0 601 025 BC - Wheel and tyre combination ⇒ page 267

Size:	$6^1/_2$ J x 16
Wheel offset in mm:	50
Wheel load in kg:	615

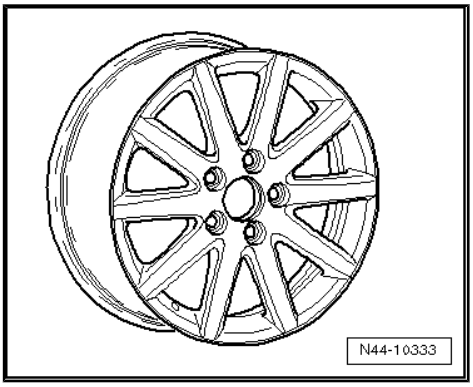

1K0 601 025 BM - Wheel and tyre combination ⇒ page 267

Size:	$6^1/_2$ J x 16
Wheel offset in mm:	50
Wheel load in kg:	615

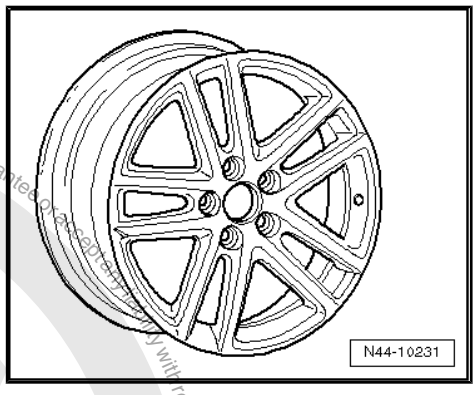

1K0 601 025 BR - Wheel and tyre combination ⇒ page 267

Size:	$6^1/_2$ J x 16
Wheel offset in mm:	50
Wheel load in kg:	615

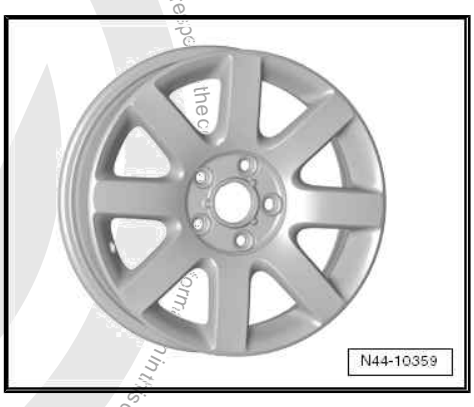

1K0 601 025 BS - Wheel and tyre combination ⇒ page 267

Size:	$6^1/_2$ J x 16
Wheel offset in mm:	50
Wheel load in kg:	615

Protected by copyright. Copying for private or commercial purposes, in part or in whole, is not permitted unless authorised by Volkswagen AG. Volkswagen AG does not guarantee or accept any liability with respect to the correctness of information in this document. Copyright by Volkswagen AG.
satelettronica

1K0 601 025 CB - Wheel and tyre combination ⇒ page 267

Size:	$6^1/_2$ J x 16
Wheel offset in mm:	50
Wheel load in kg:	615

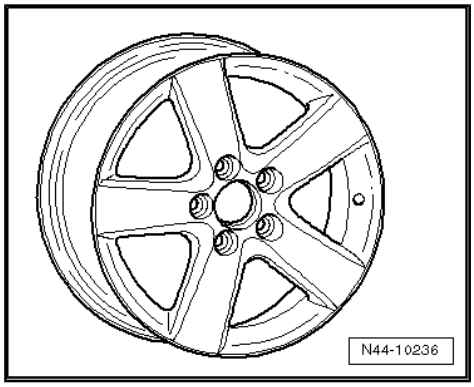

1K0 601 025 CG - Wheel and tyre combination ⇒ page 267

Size:	$6^1/_2$ J x 16
Wheel offset in mm:	50
Wheel load in kg:	615

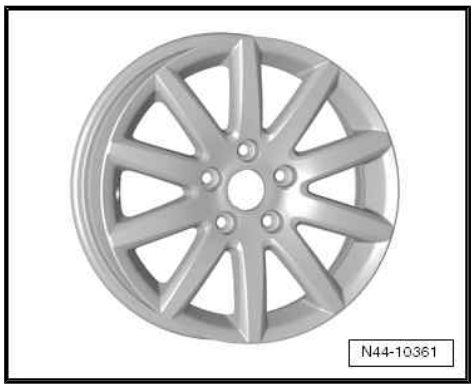

1T0 601 025 C - Wheel and tyre combination ⇒ page 267

Size:	$6^1/_2$ J x 16
Wheel offset in mm:	50
Wheel load in kg:	615

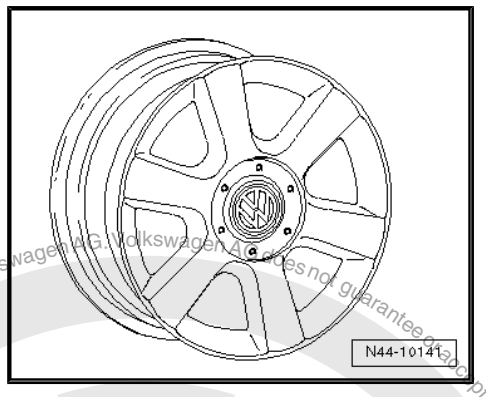

1K0 601 025 F - Wheel and tyre combination ⇒ page 267

Size:	$6^1/_2$ J x 16
Wheel offset in mm:	50
Wheel load in kg:	615

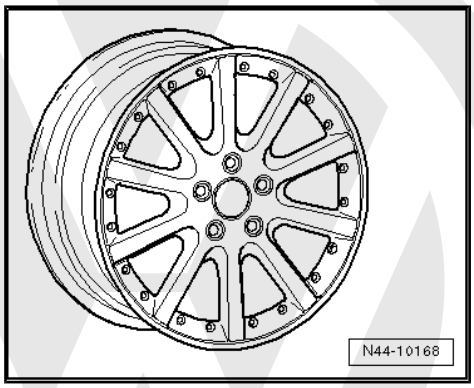

Protected by copyright. Copying for private or commercial purposes, in part or in whole, is not permitted unless authorised by Volkswagen AG. Volkswagen AG does not guarantee or accept any liability with respect to the correctness of information in this document. Copyright by Volkswagen AG.
satelettronica

1K0 601 025 P - Wheel and tyre combination ⇒ page 267

Size:	$6^1/_2$ J x 16
Wheel offset in mm:	50
Wheel load in kg:	615

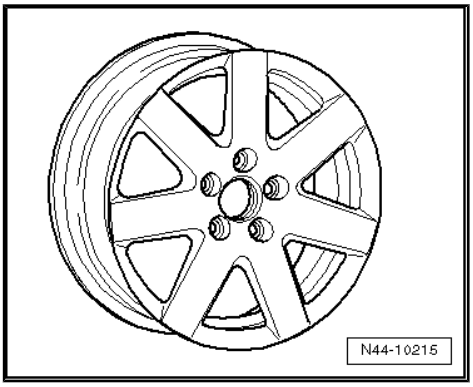

1K0 601 025 R - Wheel and tyre combination ⇒ page 267

Size:	$6^1/_2$ J x 16
Wheel offset in mm:	50
Wheel load in kg:	615

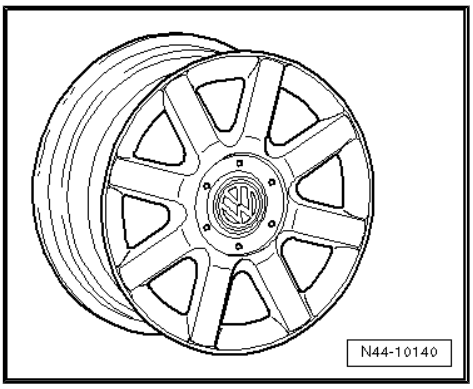

1T0 601 025 G, 1T0 601 025 K - Wheel and tyre combination ⇒ page 267

Size:	$6^1/_2$ J x 16
Wheel offset in mm:	50
Wheel load in kg:	615

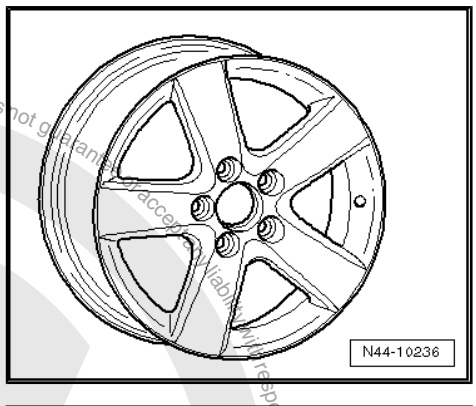

1T0 601 025 M - Wheel and tyre combination ⇒ page 267

Size:	$6^1/_2$ J x 16
Wheel offset in mm:	50
Wheel load in kg:	615

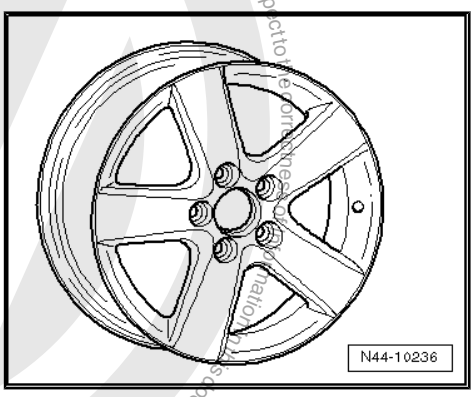

Protected by copyright. Copying for private or commercial purposes, in part or in whole, is not permitted unless authorised by Volkswagen AG. Volkswagen AG does not guarantee or accept any liability with respect to the correctness of information in this document. Copyright by Volkswagen AG.
satelettronica

1T0 601 025 R - Wheel and tyre combination ⇒ page 267

Size:	$6^1/_2$ J x 16
Wheel offset in mm:	50
Wheel load in kg:	615

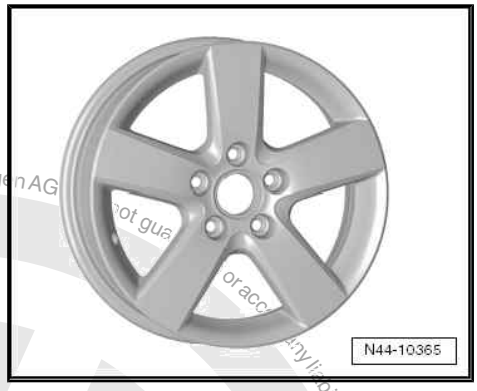

34.2.5 6 J x 17

Caution

Observe the allocation of wheels and tyres to the respective engines, which are listed in the overview table ⇒ page 266 *.*

Winter wheel

1K0 601 025 N - Wheel and tyre combination ⇒ page 269

Size:	6 J x 17
Wheel offset in mm:	48,5
Wheel load in kg:	615

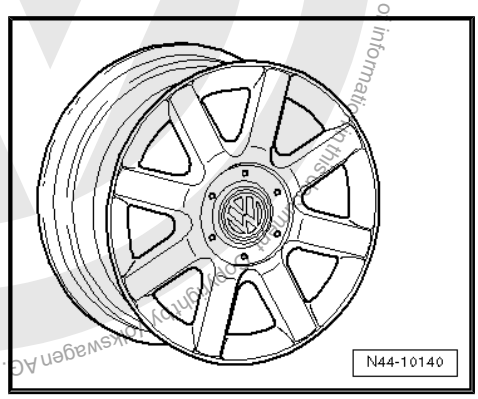

34.2.6 7 J x 17 offset 47

Caution

Observe the allocation of wheels and tyres to the respective engines, which are listed in the overview table ⇒ page 266 *.*

5M0 601 025 - Wheel and tyre combination ⇒ page 266

Size:	7 J x 17
Wheel offset in mm:	47
Wheel load in kg:	630

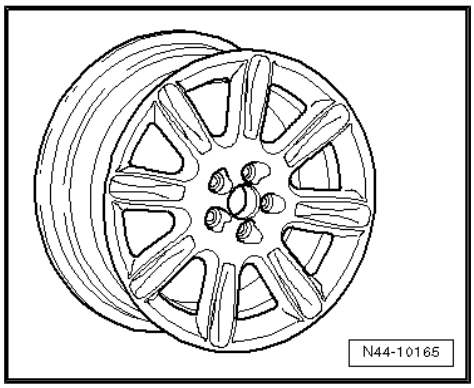

Protected by copyright. Copying for private or commercial purposes, in part or in whole, is not permitted unless authorised by Volkswagen AG. Volkswagen AG does not guarantee or accept any liability with respect to the correctness of information in this document. Copyright by Volkswagen AG.

satelettronica

34.2.7 7 J x 17 offset 54

Caution

Observe the allocation of wheels and tyres to the respective engines, which are listed in the overview table ⇒ page 266 *.*

1K0 601 025 B - Wheel and tyre combination ⇒ page 267

Size:	7 J x 17
Wheel offset in mm:	54
Wheel load in kg:	615

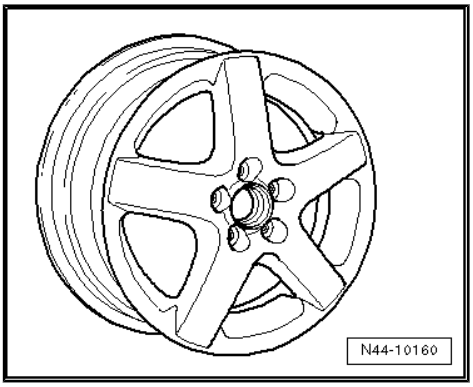

1K0 601 025 C - Wheel and tyre combination ⇒ page 267

Size:	7 J x 17
Wheel offset in mm:	54
Wheel load in kg:	615

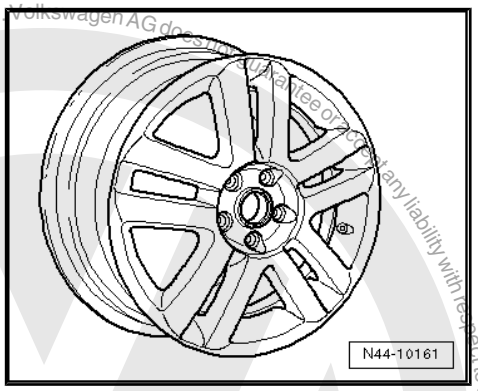

1K0 601 025 J - Wheel and tyre combination ⇒ page 267

Size:	7 J x 17
Wheel offset in mm:	54
Wheel load in kg:	615

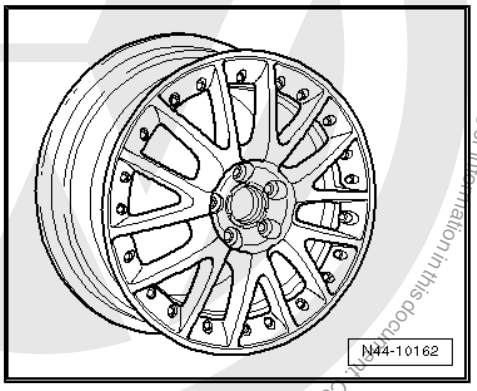

1K0 601 025 K - Wheel and tyre combination ⇒ page 267

Size:	7 J x 17
Wheel offset in mm:	54
Wheel load in kg:	615

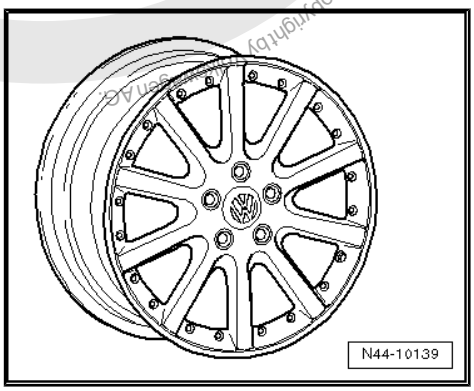

Protected by copyright. Copying for private or commercial purposes, in part or in whole, is not permitted unless authorised by Volkswagen AG. Volkswagen AG does not guarantee or assume any liability with respect to the correctness of information in this document. Copyright by Volkswagen AG.
satelettronica

Protected by copyright. Copyright by Volkswagen AG. Copyright for private or commercial purposes, in part or in whole, is not permitted unless authorised by Volkswagen AG. Volkswagen AG does not guarantee or accept any liability with respect to the correctness of information in this document.

1K0 601 025 M - Wheel and tyre combination ⇒ page 267

Size:	7 J x 17
Wheel offset in mm:	54
Wheel load in kg:	615

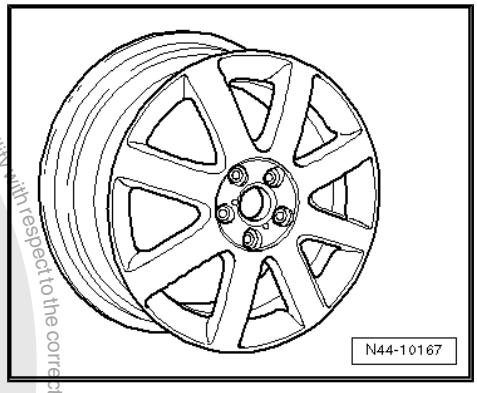

1K0 601 025 T - Wheel and tyre combination ⇒ page 267

Size:	7 J x 17
Wheel offset in mm:	54
Wheel load in kg:	615

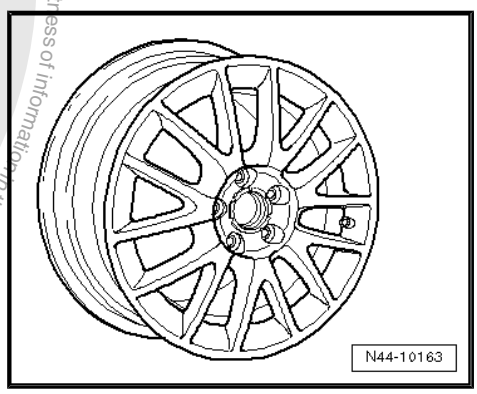

1K0 601 025 AF - Wheel and tyre combination ⇒ page 267

Size:	7 J x 17
Wheel offset in mm:	54
Wheel load in kg:	630

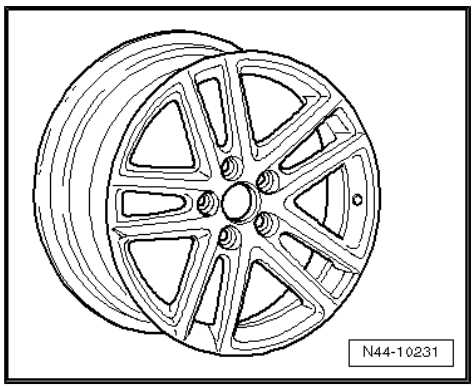

1K0 601 025 AE - Wheel and tyre combination ⇒ page 267

Size:	7 J x 17
Wheel offset in mm:	54
Wheel load in kg:	630

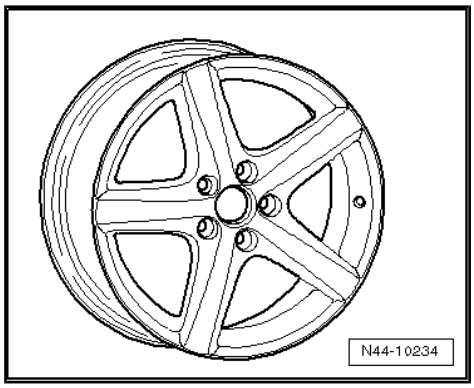

satelettronica

1K0 601 025 AN - Wheel and tyre combination ⇒ page 267

Size:	7 J x 17
Wheel offset in mm:	54
Wheel load in kg:	615

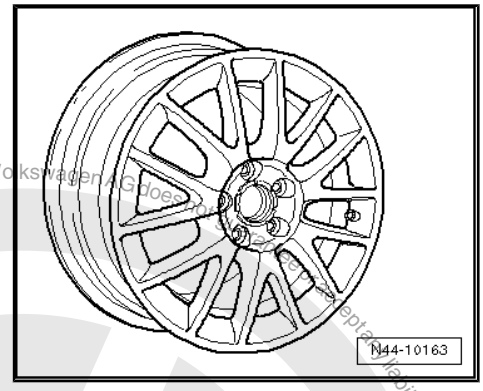

34.2.8 7 1/2 J x 17

Caution

Observe the allocation of wheels and tyres to the respective engines, which are listed in the overview table ⇒ page 266 *.*

3C0 601 025 R - Wheel and tyre combination ⇒ page 267

Size:	7 1/2 J x 17
Wheel offset in mm:	47
Wheel load in kg:	650

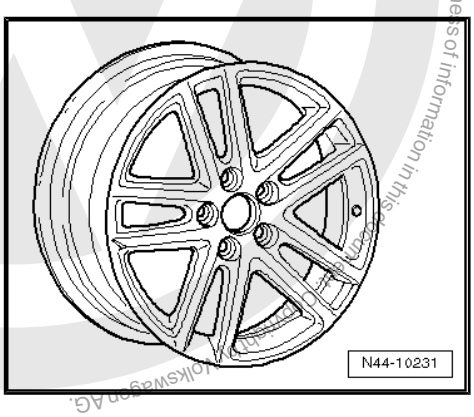

Protected by copyright. Copying for private or commercial purposes, in part or in whole, is not permitted unless authorised by Volkswagen AG. Volkswagen AG does not guarantee or accept any liability with respect to the correctness of information in this document.
satelettronica

35 Golf Plus from model year 2005

General

Volkswagen vehicles are built according to the latest findings in safety engineering. To keep it that way, we recommend the use of only genuine Volkswagen spare parts. You can recognise this by the VW Audi logo and by the part number. It has been established that these parts are reliable, safe and suitable.

Despite constant appraisal of the market, we cannot assess other products on these points, even when in isolated cases they have been passed by official inspectors or have been granted official approval. Therefore, we cannot, of course, assume any liability if these products are installed.

> ⚠ **WARNING**
>
> *The products from Volkswagen genuine parts and Votex genuine accessories may differ in fitting requirements, torque specifications and so on.*
>
> *Always follow the respective fitting and operating instructions.*

The wheel and tyre combinations or changes listed in the vehicle tables refer exclusively to Volkswagen Genuine wheels. Approval of wheel and tyre combinations or a change to wheels from the accessories trade is not possible with the parts certificate attached here.

> ⚠ **WARNING**
>
> *The fitting instructions and torque specifications for wheels from Votex genuine accessories may differ from those intended for wheels from Volkswagen genuine parts.*
>
> *Therefore, always observe the torque settings for the wheel bolts as well as the respective fitting and operating instructions.*

35.1 Golf Plus, type 1KP model year 2005 to model year 2006

Appendix for parts certificate 2066/08

The parts certificate can be found on the Volkswagen ServiceNet under Technology; Guides; Wheels and Tyres Guide.

Type Approval No.: e1*2001/116*0304*00 to e1*2001/116*0304*05

Overview

Model engine output	Tyres	Tyre size	Wheel rim	Off-set in mm	Snow chains	Remarks
1.4l 55 kW; 1.6l 66 kW petrol engines;	Standard tyres	195/65 R 15 91T	6 J x 15 ⇒ page 286	47	Yes	General information on: ◆ Winter tyres ⇒ page 15 ◆ Snow chains ⇒ page 18
1.9l 66 kW TDI diesel engine	Modification	195/65 R 15 91H/V	6 J x 15 ⇒ page 286	47	Yes	

Copyright by Volkswagen AG. Volkswagen AG does not guarantee or accept any liability with respect to the correctness of information in this document. Copyright by Volkswagen AG.
satelettronica

Model engine output	Tyres	Tyre size	Wheel rim	Off-set in mm	Snow chains	Remarks
		195/65 R 15 91T/H/V	$6^1/_2$ J x 15 ⇒ page 286	50	Yes	Tyre makes recommended by Volkswagen: ◆ Summer tyres ⇒ page 648 ◆ All-season tyres ⇒ page 670 ◆ Winter tyres ⇒ page 684
		205/60 R 15 91T/H/V	6 J x 15 ⇒ page 286	47	Yes	
		205/55 R 16 91H/V/W	$6^1/_2$ J x 16 ⇒ page 288	50	No	
		225/45 R 17 91H/V/W	7 J x 17 ⇒ page 293	54	No	
		225/40 R 18 92Y* ⇒ page 281	$7^1/_2$ J x 18 ⇒ page 295	51	No	* 225/40 R 18 92Y tyres on $7^1/_2$ J x 18 rims with an offset of 51 are permitted only on vehicles with sports running gear and rear axle camber of -1°45'!
	Winter tyres	195/65 R 15 91Q/T/H	6 J x 15 ⇒ page 286	47	Yes	
		205/55 R 16 91Q/T/H	6 J x 16 ⇒ page 287	50	Yes	
1.6l 75 kW; 1.6l 85 kW petrol engines; 1.9l 77 kW TDI diesel engine	Standard tyres	195/65 R 15 91H	6 J x 15 ⇒ page 286	47	Yes	
	Modification	195/65 R 15 91V	6 J x 15 ⇒ page 286	47	Yes	
		195/65 R 15 91H/V	$6^1/_2$ J x 15 ⇒ page 286	50	Yes	
		205/60 R 15 91H/V	6 J x 15 ⇒ page 286	47	Yes	
		205/55 R 16 91H/V/W	$6^1/_2$ J x 16 ⇒ page 288	50	No	
		225/45 R 17 91H/V/W	7 J x 17 ⇒ page 293	54	No	
		225/40 R 18 92Y* ⇒ page 281	$7^1/_2$ J x 18 ⇒ page 295	51	No	
	Winter tyres	195/65 R 15 91Q/T/H	6 J x 15 ⇒ page 286	47	Yes	

satelettronica

Model engine output	Tyres	Tyre size	Wheel rim	Off-set in mm	Snow chains	Remarks
		205/55 R 16 91Q/T/H	6 J x 16 ⇒ page 287	50	Yes	
2.0l 110 kW; petrol engine	Standard tyres	205/55 R 16 91V	6 1/2 J x 16 ⇒ page 288	50	No	
2.0l 96 kW TDI; 2.0l 100 kW TDI; 2.0l 103 kW TDI; diesel engines	Modification	195/65 R 15 91V	6 J x 15 ⇒ page 286	47	Yes	
		195/65 R 15 91V	6 1/2 J x 15 ⇒ page 286	50	Yes	
		205/60 R 15 91V	6 J x 15 ⇒ page 286	47	Yes	
		205/55 R 16 91W	6 1/2 J x 16 ⇒ page 288	50	No	
		225/45 R 17 91V/W	7 J x 17 ⇒ page 293	54	No	
		225/40 R 18 92Y* ⇒ page 281	7 1/2 J x 18 ⇒ page 295	51	No	
	Winter tyres	195/65 R 15 91Q/T/H	6 J x 15 ⇒ page 286	47	Yes	
		205/55 R 16 91Q/T/H	6 J x 16 ⇒ page 287	50	Yes	

Tyre inflation pressures are located on a sticker in the fuel tank flap or in ⇒ Maintenance ; Booklet ; Check tyres: condition, profile, inflation pressure, depth of tread .

35.2 Golf Plus, type 1KP model year 2007 to model year 2009

Appendix for parts certificate 2066/08

The parts certificate can be found on the Volkswagen ServiceNet under Technology; Guides; Wheels and Tyres Guide.

Type Approval No.: e1*2001/116*0304*06 to e1*2001/116*0304*13

Overview

Model engine output	Tyres	Tyre size	Wheel rim	Off-set in mm	Snow chains	Remarks
1.9l 66 kW TDI diesel engine (engine codes: BXF and BXJ)	Standard tyres	195/65 R 15 91T	6 J x 15 ⇒ page 286	47	Yes	

Copyright by Volkswagen AG. Volkswagen AG does not guarantee or accept any liability with respect to the correctness of information in this document. Copyright by Volkswagen AG. Protected by copyright. Copying for private or commercial purposes, in part or in whole, is not permitted unless authorised by Volkswagen AG.
satelettronica

Protected by copyright. Copyright by Volkswagen AG. Volkswagen AG does not guarantee or accept any liability with respect to the correctness of information in this document. Copying for private or commercial purposes, in part or in whole, is not permitted unless authorised by Volkswagen AG.

Model engine output	Tyres	Tyre size	Wheel rim	Off-set in mm	Snow chains	Remarks
1.6l 85 kW petrol engine with automatic gear-box	Modification	195/65 R 15 91H/V	6 J x 15 ⇒ page 286	47	Yes	General information on: ◆ Winter tyres ⇒ page 15 ◆ Snow chains ⇒ page 18
1.9l 77 kW TDI diesel engine (engine code: BLS, BXE)		195/65 R 15 91T/H/V	$6^1/_2$ J x 15 ⇒ page 286	50	Yes	Tyre makes recom-mended by Volkswa-gen: ◆ Summer tyres ⇒ page 648 ◆ All-season tyres ⇒ page 670 ◆ Winter tyres ⇒ page 684
		205/60 R 15 91T/H/V	6 J x 15 ⇒ page 286	47	Yes	
		205/55 R 16 91T/H/V	$6^1/_2$ J x 16 ⇒ page 288	50	No	
		225/45 R 17 91T/H/V	7 J x 17 ⇒ page 293	54	No	
		225/40 R 18 92Y* ⇒ page 283	$7^1/_2$ J x 18 ⇒ page 295	51	No	* 225/40 R 18 92Y tyres on $7^1/_2$ J x 18 rims with an offset of 51 are permitted only on vehicles with sports running gear and rear axle camber of -1°45'!
	Winter tyres	195/65 R 15 91Q/T/H	6 J x 15 ⇒ page 286	47	Yes	
		205/55 R 16 91Q/T/H	6 J x 16 ⇒ page 287	50	Yes	
1.4l 55 kW; 1.4l 59 kW; 1.6l 66 kW; 1.6l 75 kW; petrol engines	Standard tyres	195/65 R 15 91T	6 J x 15 ⇒ page 286	47	Yes	
1.9l 66 kW TDI diesel engine (engine code: BRU)	Modification	195/65 R 15 91H/V	6 J x 15 ⇒ page 286	47	Yes	
		195/65 R 15 91T/H/V	$6^1/_2$ J x 15 ⇒ page 286	50	Yes	
		205/60 R 15 91T/H/V	6 J x 15 ⇒ page 286	47	Yes	
		205/55 R 16 91H/V/W	$6^1/_2$ J x 16 ⇒ page 288	50	No	

satelettronica

Model engine output	Tyres	Tyre size	Wheel rim	Off-set in mm	Snow chains	Remarks
		225/45 R 17 91H/V/W	7 J x 17 ⇒ page 293	54	No	
		225/40 R 18 92Y* ⇒ page 283	7 1/2 J x 18 ⇒ page 295	51	No	
	Winter tyres	195/65 R 15 91Q/T/H	6 J x 15 ⇒ page 286	47	Yes	
		205/55 R 16 91Q/T/H	6 J x 16 ⇒ page 287	50	Yes	
1.6l 85 kW petrol engine with manual gearbox	Standard tyres	195/65 R 15 91H	6 J x 15 ⇒ page 286	47	Yes	
1.4l 90 kW 1.4l 103 kW petrol engine	Modification	195/65 R 15 91V	6 J x 15 ⇒ page 286	47	Yes	
1.9l 77 kW TDI diesel engine (engine code: BKC)		195/65 R 15 91H/V	6 1/2 J x 15 ⇒ page 286	50	Yes	
		205/60 R 15 91H/V	6 J x 15 ⇒ page 286	47	Yes	
		205/55 R 16 91H/V/W	6 1/2 J x 16 ⇒ page 288	50	No	
		225/45 R 17 91H/V/W	7 J x 17 ⇒ page 293	54	No	
		225/40 R 18 92Y* ⇒ page 283	7 1/2 J x 18 ⇒ page 295	51	No	
	Winter tyres	195/65 R 15 91Q/T/H	6 J x 15 ⇒ page 286	47	Yes	
		205/55 R 16 91Q/T/H	6 J x 16 ⇒ page 287	50	Yes	
2.0l 110 kW; petrol engine	Standard tyres	205/55 R 16 91H	6 1/2 J x 16 ⇒ page 288	50	No	
2.0l 96 kW TDI; 2.0l 100 kW TDI; 2.0l 103 kW TDI; Diesel engines	Modification	195/65 R 15 91H/V	6 J x 15 ⇒ page 286	47	Yes	
		195/65 R 15 91H/V	6 1/2 J x 15 ⇒ page 286	50	Yes	
		205/60 R 15 91H/V	6 J x 15 ⇒ page 286	47	Yes	
		205/55 R 16 91V/W	6 1/2 J x 16 ⇒ page 288	50	No	

Reproduced by copyright. Copyright for private or commercial purposes, in part or in whole, not permitted unless authorised by Volkswagen AG. Volkswagen AG does not guarantee or accept any liability with respect to the correctness of information in this document. Copyright by Volkswagen AG.

satelettronica

Model engine output	Tyres	Tyre size	Wheel rim	Off-set in mm	Snow chains	Remarks
		225/45 R 17 91H/V/W	7 J x 17 ⇒ page 293	54	No	
		225/40 R 18 92Y* ⇒ page 283	7 1/2 J x 18 ⇒ page 295	51	No	
	Winter tyres	195/65 R 15 91Q/T/H	6 J x 15 ⇒ page 286	47	Yes	
		205/55 R 16 91Q/T/H	6 J x 16 ⇒ page 287	50	Yes	
1.4l 118 kW; 1.4l 125 kW; petrol engine	Standard tyres	205/55 R 16 91V	6 1/2 J x 16 ⇒ page 288	50	No	
	Modification	205/55 R 16 91W	6 1/2 J x 16 ⇒ page 288	50	No	
		225/45 R 17 91V/W	7 J x 17 ⇒ page 293	54	No	
		225/40 R 18 92Y* ⇒ page 283	7 1/2 J x 18 ⇒ page 295	51	No	
	Winter tyres	205/55 R 16 91Q/T/H	6 J x 16 ⇒ page 287	50	Yes	
		205/50 R 17 93Q/T/H	6 J x 17 ⇒ page 292	48,5	Yes** ⇒ page 285	** Only snow chains with fine links of no more than 8 mm may be used ⇒ page 285 .

Tyre inflation pressures are located on a sticker in the fuel tank flap or in ⇒ Maintenance ; Booklet ; Check tyres: condition, profile, inflation pressure, depth of tread .

Approved snow chains for 6 J x 17 offset 48.5 wheel rim

The following snow chains are only permissible in combination with the adjacent wheel and tyre combination!

Chain manufacturer Item no.	Accessory part number	Tyre size	Wheel rim	Part no.
Ottinger 100 956	-	205/50 R 17 93Q/T/H	6 J x 17 offset 48.5	1K0 601 025 N

35.3 Wheel allocation for Golf Plus, type 1KP model year 2005 to model year 2009

Explanation of information on wheels ⇒ page 59

Torque specifications for wheel bolts ⇒ Running gear, axles, steering; Rep. gr. 44 ; Torque specifications for fitting wheels

Pitch circle diameter: 112 mm

Protected by copyright. Copying for private or commercial purposes, in part or in whole, is not permitted unless authorised by Volkswagen AG. Volkswagen AG does not guarantee or accept any liability with respect to the correctness of information in this document. Copyright by Volkswagen AG.

satelettronica

Number of wheel bolt holes: 5

35.3.1 6 J x 15

Caution

Observe the allocation of wheels and tyres to the respective engines, which are listed in the overview table ⇒ page 280 .

1K0 601 027 C, 1K0 601 027 H - Wheel and tyre combination ⇒ page 280

Size:	6 J x 15
Wheel offset in mm:	47
Wheel load in kg:	615

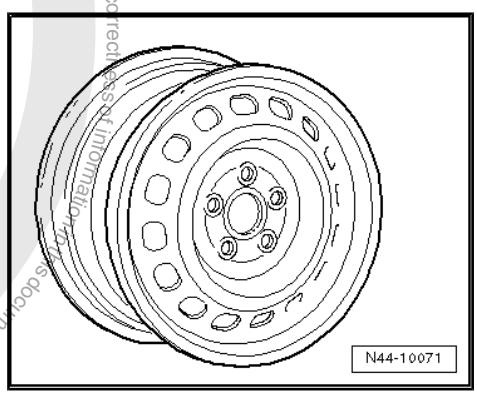

1K0 601 027 T - Wheel and tyre combination ⇒ page 280

Size:	6 J x 15
Wheel offset in mm:	47
Wheel load in kg:	615

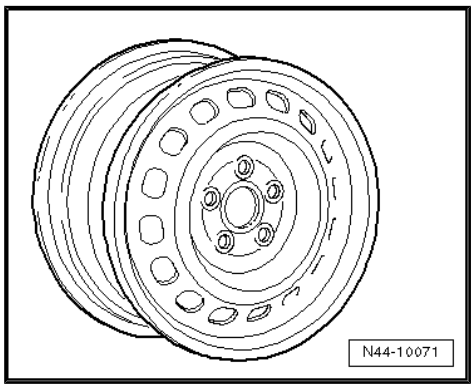

2K0 601 027 - Wheel and tyre combination ⇒ page 280

Size:	6 J x 15
Wheel offset in mm:	47
Wheel load in kg:	650

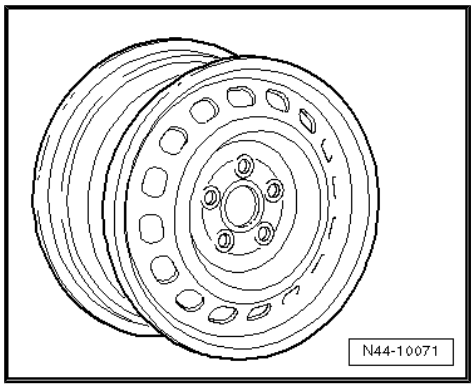

35.3.2 6 1/2 J x 15

Caution

Observe the allocation of wheels and tyres to the respective engines, which are listed in the overview table ⇒ page 280 .

Protected by copyright. Copying for private or commercial purposes, in part or in whole, is not permitted unless authorised by Volkswagen AG. Volkswagen AG does not guarantee or accept any liability with respect to the correctness of information in this document. Copyright by Volkswagen AG.
satelettronica

1K0 601 025 A - Wheel and tyre combination ⇒ page 281

Size:	$6^1/_2$ J x 15
Wheel offset in mm:	50
Wheel load in kg:	600

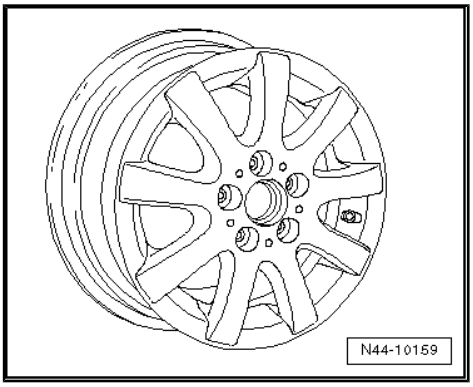

1K0 601 025 AK - Wheel and tyre combination ⇒ page 281

Size:	$6^1/_2$ J x 15
Wheel offset in mm:	50
Wheel load in kg:	600

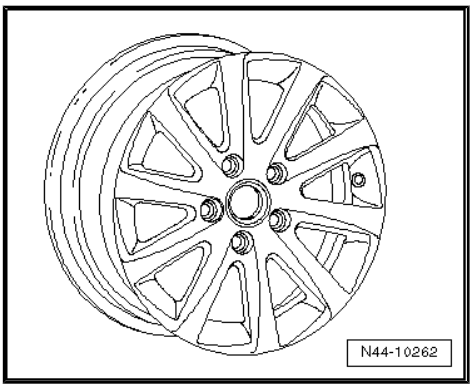

1K0 601 025 AQ - Wheel and tyre combination ⇒ page 281

Size:	$6^1/_2$ J x 15
Wheel offset in mm:	50
Wheel load in kg:	600

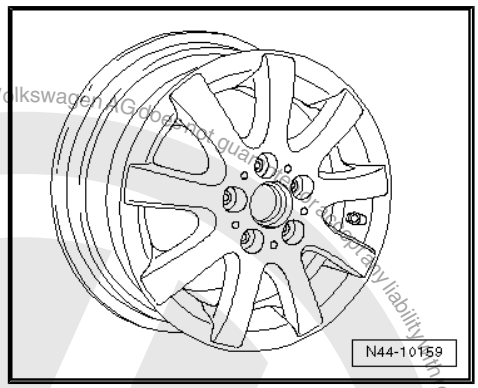

1K0 601 025 CA - Wheel and tyre combination ⇒ page 281

Size:	$6^1/_2$ J x 15
Wheel offset in mm:	50
Wheel load in kg:	600

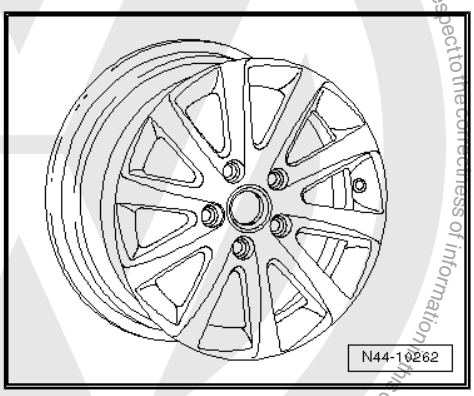

35.3.3 6 J x 16

Caution

Observe the allocation of wheels and tyres to the respective engines, which are listed in the overview table ⇒ page 280 *.*

satelettronica
Copyright by Volkswagen AG. Volkswagen AG does not guarantee or assume any liability with respect to the correctness of information in this document. Copyright by Volkswagen AG. Protected by copyright. Copying for private or commercial purposes, in part or in whole, is not permitted unless authorised by Volkswagen AG.

Winter wheels

8P0 601 027 - Wheel and tyre combination ⇒ page 281

Size:	6 J x 16
Wheel offset in mm:	50
Wheel load in kg:	600

Use the following wheel bolt caps for wheel bolts:

- 1K0.601.173 (4 per wheel)
- 1K0.601.173.A (1 per wheel)

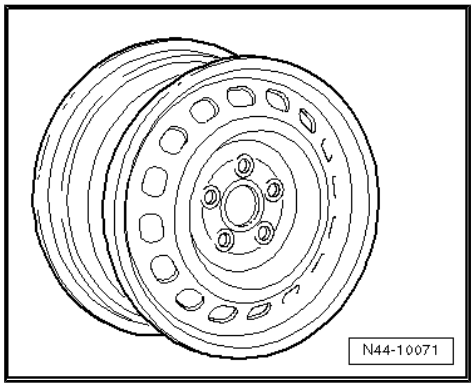

1K0 601 025 Q - Wheel and tyre combination ⇒ page 281

Size:	6 J x 16 EH2 ⇒ page 59
Wheel offset in mm:	50
Wheel load in kg:	615

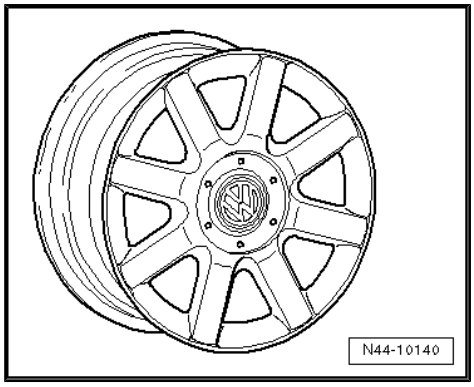

35.3.4 6 1/2 J x 16

Caution

Observe the allocation of wheels and tyres to the respective engines, which are listed in the overview table ⇒ page 280 *.*

1K0 601 027 A - Wheel and tyre combination ⇒ page 281

Size:	6 1/2 J x 16
Wheel offset in mm:	50
Wheel load in kg:	615

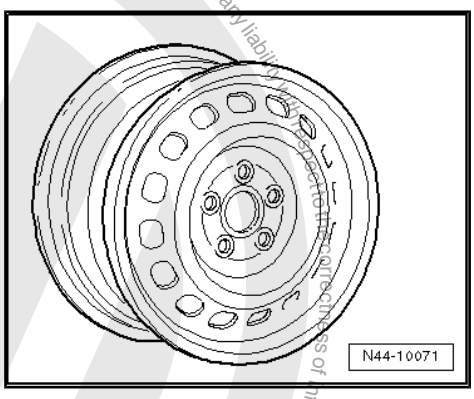

Protected by copyright. Copying for private or commercial purposes, in part or in whole, is not permitted unless authorised by Volkswagen AG. Volkswagen AG does not guarantee or accept any liability with respect to the correctness of information in this document. Copyright by Volkswagen AG.
satelettronica

1K0 601 027 J, 1K0 601 027 K - Wheel and tyre combination ⇒ page 281

Size:	$6^1/_2$ J x 16
Wheel offset in mm:	50
Wheel load in kg:	615

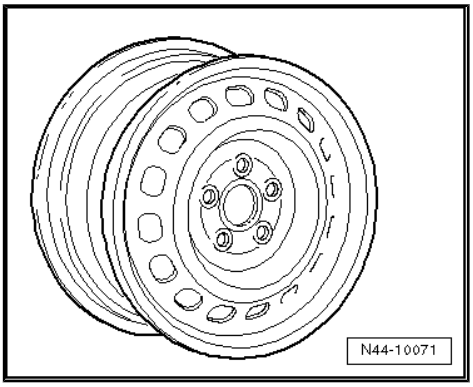

1K0 601 025 AJ - Wheel and tyre combination ⇒ page 281

Size:	$6^1/_2$ J x 16
Wheel offset in mm:	50
Wheel load in kg:	615

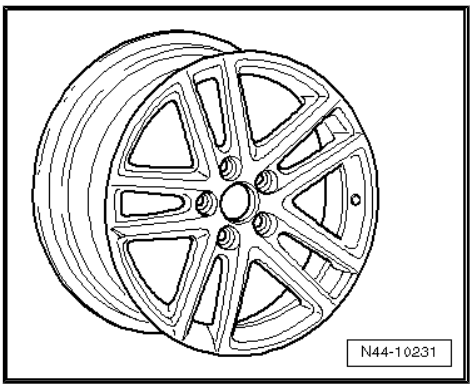

1K0 601 025 BC - Wheel and tyre combination ⇒ page 281

Size:	$6^1/_2$ J x 16
Wheel offset in mm:	50
Wheel load in kg:	615

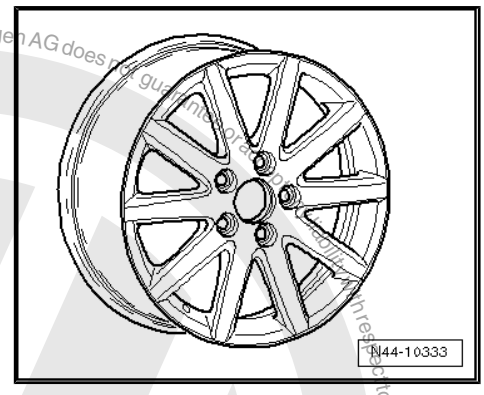

1K0 601 025 BM - Wheel and tyre combination ⇒ page 281

Size:	$6^1/_2$ J x 16
Wheel offset in mm:	50
Wheel load in kg:	615

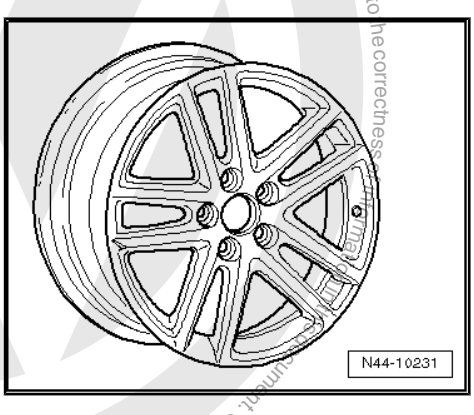

Protected by copyright. Copying for private or commercial purposes, in part or in whole, is not permitted unless authorised by Volkswagen AG. Volkswagen AG does not guarantee or accept any liability with respect to the correctness of information. Copyright by Volkswagen AG.
satelettronica

1K0 601 025 BR - Wheel and tyre combination ⇒ page 281

Size:	$6^1/_2$ J x 16
Wheel offset in mm:	50
Wheel load in kg:	615

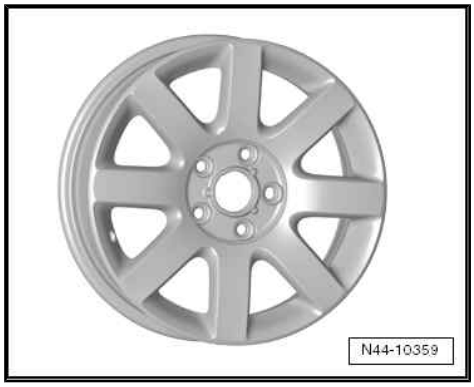

1K0 601 025 BS - Wheel and tyre combination ⇒ page 281

Size:	$6^1/_2$ J x 16
Wheel offset in mm:	50
Wheel load in kg:	615

1K0 601 025 CB - Wheel and tyre combination ⇒ page 281

Size:	$6^1/_2$ J x 16
Wheel offset in mm:	50
Wheel load in kg:	615

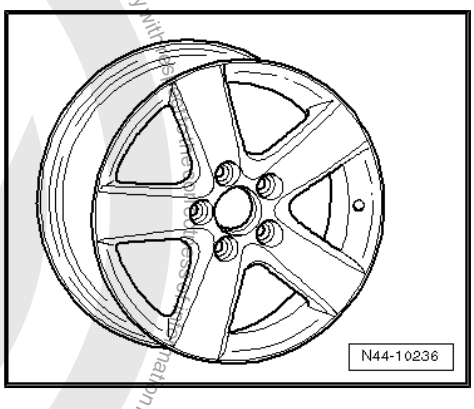

1K0 601 025 CG - Wheel and tyre combination ⇒ page 281

Size:	$6^1/_2$ J x 16
Wheel offset in mm:	50
Wheel load in kg:	615

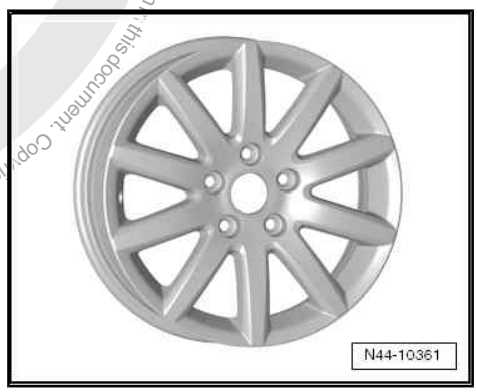

Protected by copyright. Copyright by Volkswagen AG.
Volkswagen AG does not guarantee or accept any liability with respect to the correctness of information in this document. Copyright by Volkswagen AG.
Copying for private or commercial purposes, in part or in whole, is not permitted unless authorised by Volkswagen AG.
satelettronica

1T0 601 025 C - Wheel and tyre combination ⇒ page 281

Size:	$6^1/_2$ J x 16
Wheel offset in mm:	50
Wheel load in kg:	615

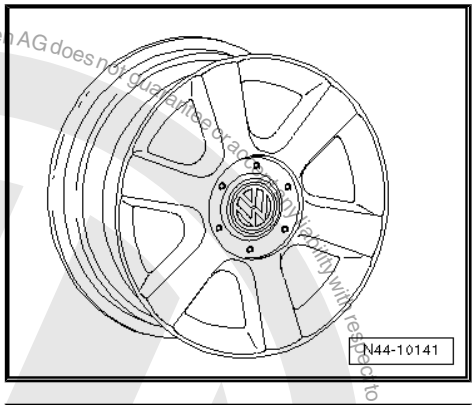

1K0 601 025 F - Wheel and tyre combination ⇒ page 281

Size:	$6^1/_2$ J x 16
Wheel offset in mm:	50
Wheel load in kg:	615

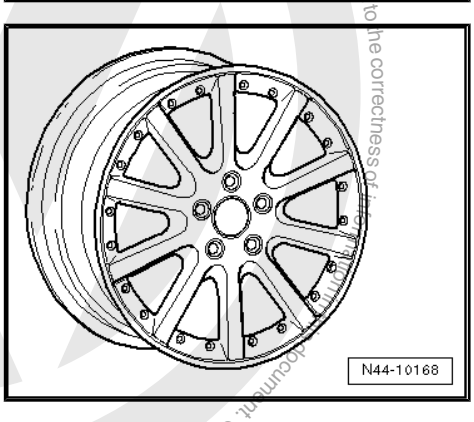

1K0 601 025 P - Wheel and tyre combination ⇒ page 281

Size:	$6^1/_2$ J x 16
Wheel offset in mm:	50
Wheel load in kg:	615

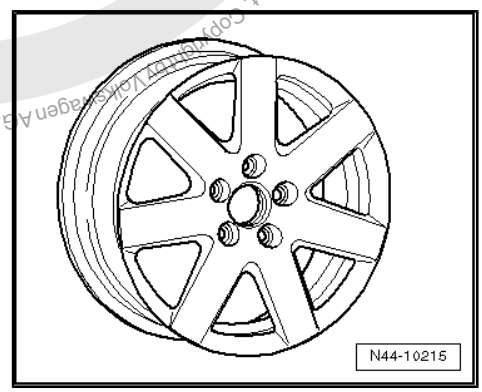

1K0 601 025 R - Wheel and tyre combination ⇒ page 281

Size:	$6^1/_2$ J x 16
Wheel offset in mm:	50
Wheel load in kg:	615

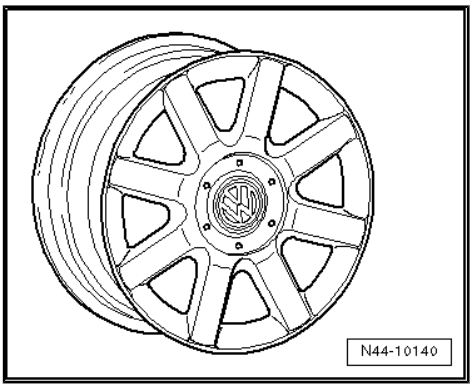

Protected by copyright. Copying for private or commercial purposes, in part or in whole, is not permitted unless authorised by Volkswagen AG. Volkswagen AG does not guarantee or accept any liability with respect to the correctness of information in this document. Copyright by Volkswagen AG.
satelettronica

1T0 601 025 G, 1T0 601 025 K - Wheel and tyre combination
⇒ page 281

Size:	$6^1/_2$ J x 16
Wheel offset in mm:	50
Wheel load in kg:	615

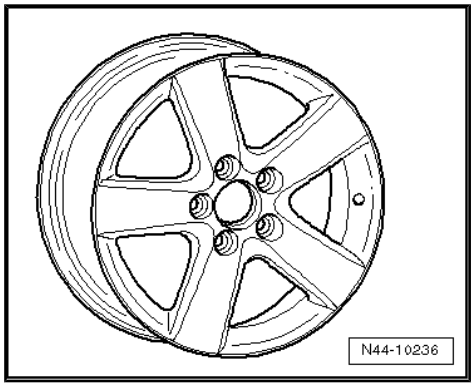

1T0 601 025 M - Wheel and tyre combination ⇒ page 281

Size:	$6^1/_2$ J x 16
Wheel offset in mm:	50
Wheel load in kg:	615

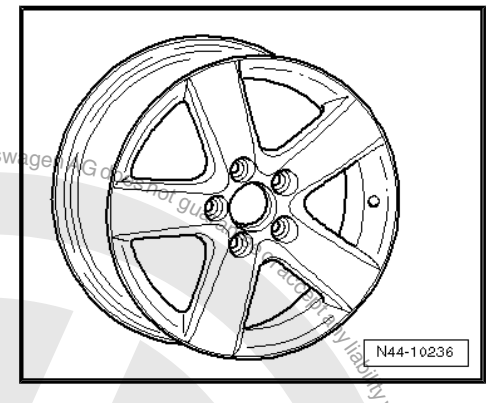

1T0 601 025 R - Wheel and tyre combination ⇒ page 281

Size:	$6^1/_2$ J x 16
Wheel offset in mm:	50
Wheel load in kg:	615

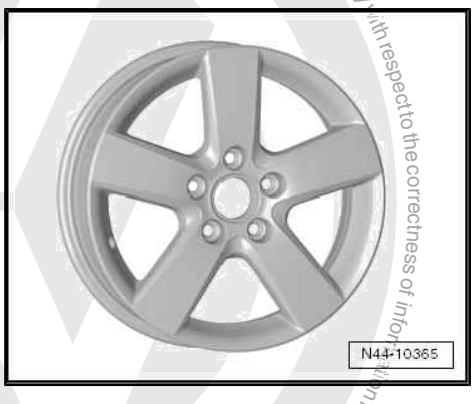

35.3.5 6 J x 17

Caution

Observe the allocation of wheels and tyres to the respective engines, which are listed in the overview table *⇒ page 282* *.*

Protected by copyright. Copying for private or commercial purposes, in part or in whole, is not permitted unless authorised by Volkswagen AG. Volkswagen AG does not guarantee or accept any liability with respect to the correctness of information in this document. Copyright by Volkswagen AG.
satelettronica

Protected by copyright. Copyright by Volkswagen AG. Volkswagen AG does not guarantee or accept any liability with respect to the correctness of information in this document. Copyright by Volkswagen AG. Protected by copyright. Copying for private or commercial purposes, in part or in whole, is not permitted unless authorised by Volkswagen AG.

Winter wheel

1K0 601 025 N - Wheel and tyre combination ⇒ page 285

Size:	6 J x 17
Wheel offset in mm:	48.5
Wheel load in kg:	615

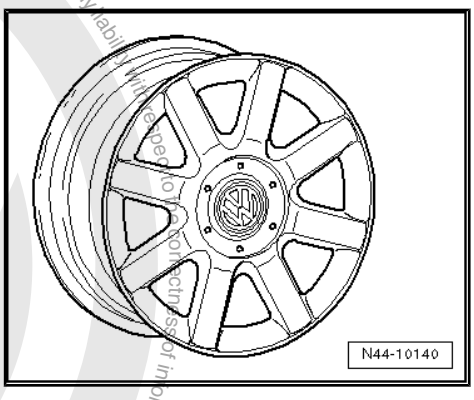

35.3.6 7 J x 17

Caution

Observe the allocation of wheels and tyres to the respective engines, which are listed in the overview table *⇒ page 280* *.*

1K0 601 025 B - Wheel and tyre combination ⇒ page 281

Size:	7 J x 17
Wheel offset in mm:	54
Wheel load in kg:	615

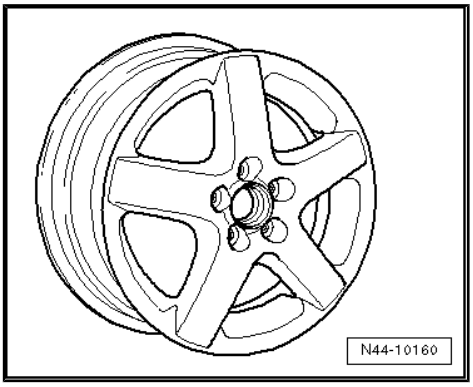

1K0 601 025 C - Wheel and tyre combination ⇒ page 281

Size:	7 J x 17
Wheel offset in mm:	54
Wheel load in kg:	615

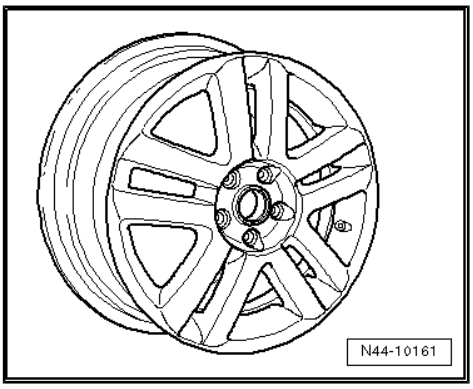

satelettronica

1K0 601 025 J - Wheel and tyre combination ⇒ page 281

Size:	7 J x 17
Wheel offset in mm:	54
Wheel load in kg:	615

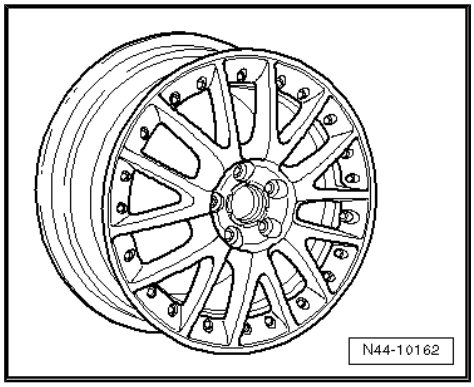

1K0 601 025 K - Wheel and tyre combination ⇒ page 281

Size:	7 J x 17
Wheel offset in mm:	54
Wheel load in kg:	615

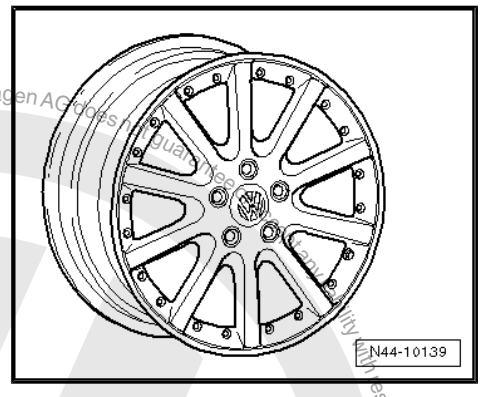

1K0 601 025 M - Wheel and tyre combination ⇒ page 281

Size:	7 J x 17
Wheel offset in mm:	54
Wheel load in kg:	615

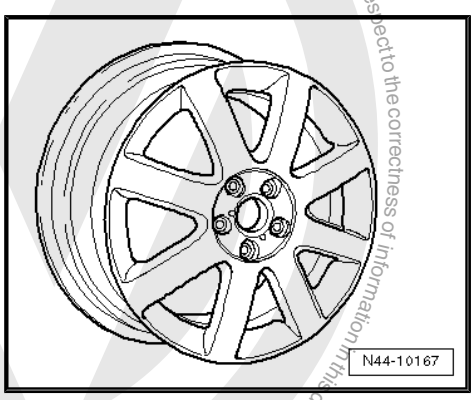

1K0 601 025 T - Wheel and tyre combination ⇒ page 281

Size:	7 J x 17
Wheel offset in mm:	54
Wheel load in kg:	615

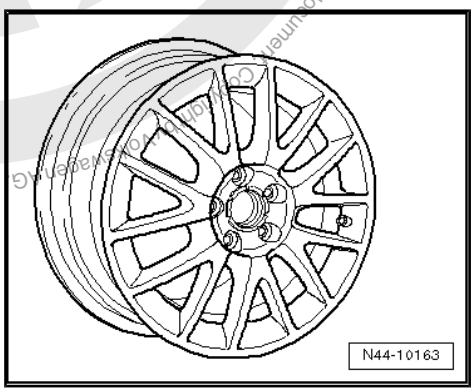

Protected by copyright. Copying for private or commercial purposes, in part or in whole, is not permitted unless authorised by Volkswagen AG. Volkswagen AG does not guarantee or accept any liability with respect to the correctness of information in this document. Copyright by Volkswagen AG.
satelettronica

1K0 601 025 AF - Wheel and tyre combination ⇒ page 281

Size:	7 J x 17
Wheel offset in mm:	54
Wheel load in kg:	630

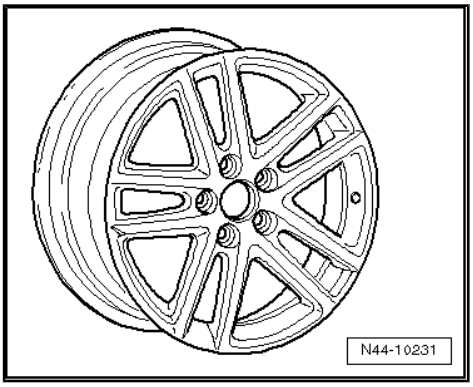

1K0 601 025 AE - Wheel and tyre combination ⇒ page 281

Size:	7 J x 17
Wheel offset in mm:	54
Wheel load in kg:	630

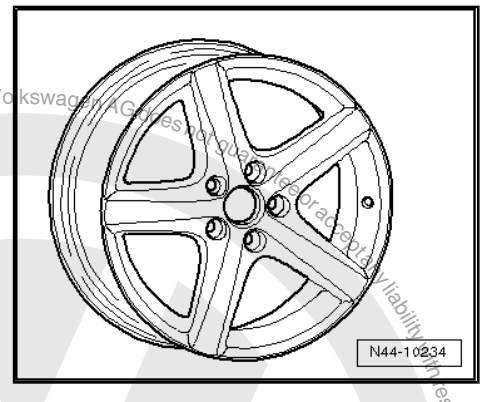

1K0 601 025 AN - Wheel and tyre combination ⇒ page 281

Size:	7 J x 17
Wheel offset in mm:	54
Wheel load in kg:	615

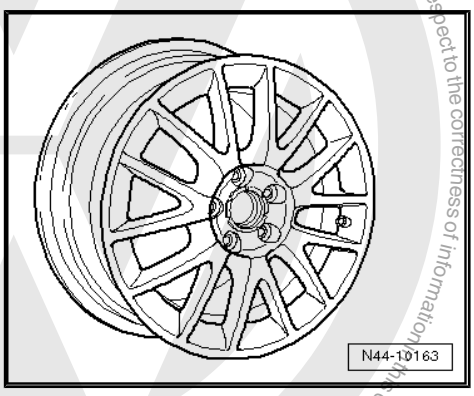

35.3.7 7 1/2 J x 18

Caution

Observe the allocation of wheels and tyres to the respective engines, which are listed in the overview table ⇒ page 280 *.*

1K0 601 025 AD - Wheel and tyre combination ⇒ page 281

Only for vehicles with sports running gear and rear axle camber of -1°45'

Size:	7 1/2 J x 18
Wheel offset in mm:	51
Wheel load in kg:	630

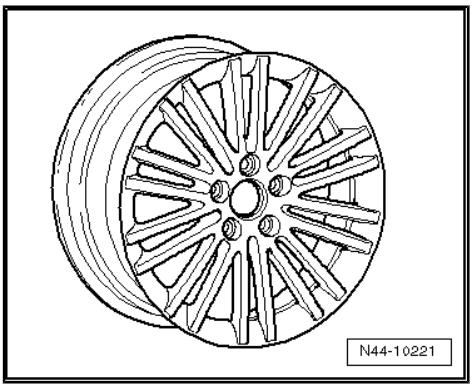

Protected by copyright. Copying for private or commercial purposes, in part or in whole, is not permitted unless authorised by Volkswagen AG. Volkswagen AG does not guarantee or accept any liability with respect to the correctness of information in this document. Copyright by Volkswagen AG.
satelettronica

1K0 601 025 AH - Wheel and tyre combination ⇒ page 281

Only for vehicles with sports running gear and rear axle camber of -1°45'

Size:	$7^1/_2$ J x 18
Wheel offset in mm:	51
Wheel load in kg:	615

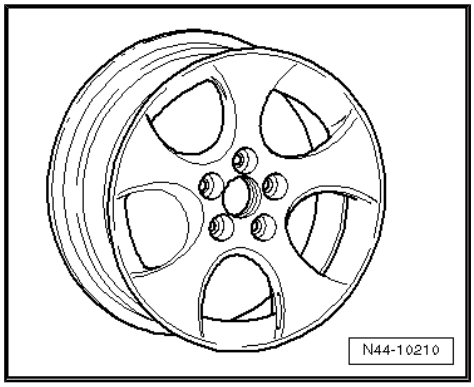

1K0 601 025 AG - Wheel and tyre combination ⇒ page 281

Only for vehicles with sports running gear and rear axle camber of -1°45'

Size:	$7^1/_2$ J x 18
Wheel offset in mm:	51
Wheel load in kg:	630

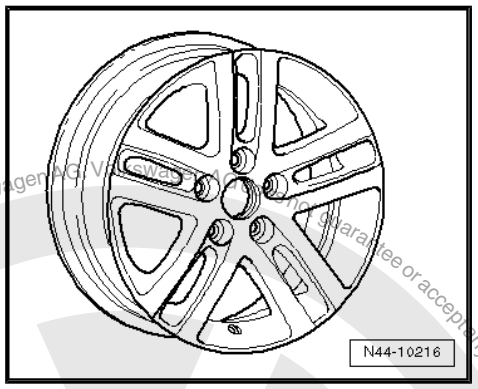

1K0 601 025 AM - Wheel and tyre combination ⇒ page 281

Only for vehicles with sports running gear and rear axle camber of -1°45'

Size:	$7^1/_2$ J x 18
Wheel offset in mm:	51
Wheel load in kg:	615

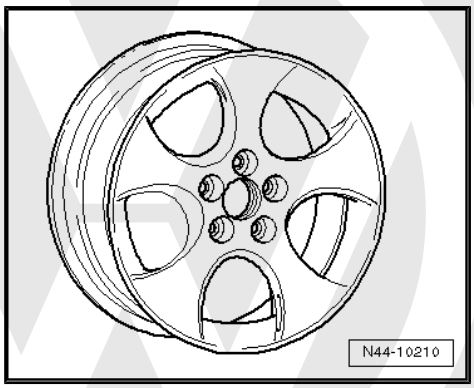

1K0 601 025 BA - Wheel and tyre combination ⇒ page 281

Only for vehicles with sports running gear and rear axle camber of -1°45'

Size:	$7^1/_2$ J x 18
Wheel offset in mm:	51
Wheel load in kg:	615

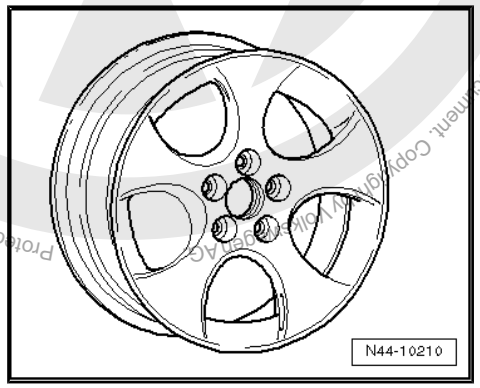

Protected by copyright. Copying for private or commercial purposes, in part or in whole, is not permitted unless authorised by Volkswagen AG. Volkswagen AG does not guarantee or accept any liability with respect to the correctness of information in this document. Copyright by Volkswagen AG.
satelettronica

1K0 601 025 BE - Wheel and tyre combination ⇒ page 281

Only for vehicles with sports running gear and rear axle camber of -1°45'

Size:	$7^1/_2$ J x 18
Wheel offset in mm:	51
Wheel load in kg:	615

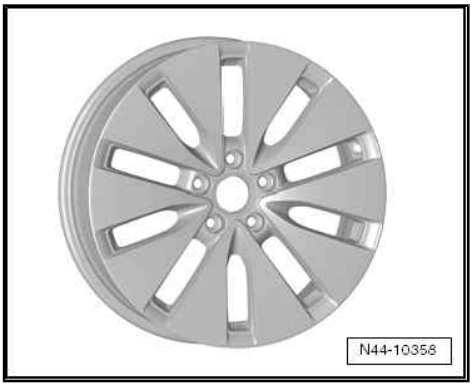

1K0 601 025 BL - Wheel and tyre combination ⇒ page 281

Only for vehicles with sports running gear and rear axle camber of -1°45'

Size:	$7^1/_2$ J x 18
Wheel offset in mm:	51
Wheel load in kg:	615

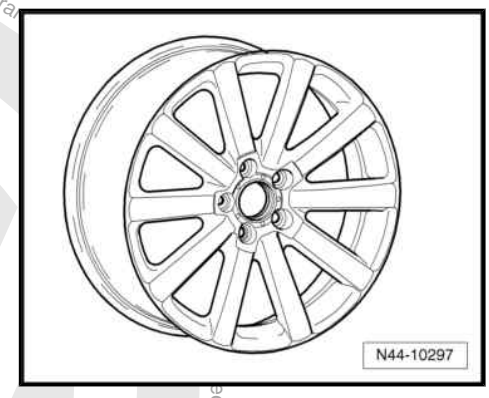

Protected by copyright. Copying for private or commercial purposes, in part or in whole, is not permitted unless authorised by Volkswagen AG. Volkswagen AG does not guarantee the correctness of information in this document. Copyright by Volkswagen AG.

satelettronica

36 Golf Plus BlueMotion from model year 2008

General

Volkswagen vehicles are built according to the latest findings in safety engineering. To keep it that way, we recommend the use of only genuine Volkswagen spare parts. You can recognise this by the VW Audi logo and by the part number. It has been established that these parts are reliable, safe and suitable.

Despite constant appraisal of the market, we cannot assess other products on these points, even when in isolated cases they have been passed by official inspectors or have been granted official approval. Therefore, we cannot, of course, assume any liability if these products are installed.

> ⚠ **WARNING**
>
> *The products from Volkswagen genuine parts and Votex genuine accessories may differ in fitting requirements, torque specifications and so on.*
>
> *Always follow the respective fitting and operating instructions.*

The wheel and tyre combinations or changes listed in the vehicle tables refer exclusively to Volkswagen Genuine wheels. Approval of wheel and tyre combinations or a change to wheels from the accessories trade is not possible with the parts certificate attached here.

> ⚠ **WARNING**
>
> *The fitting instructions and torque specifications for wheels from Votex genuine accessories may differ from those intended for wheels from Volkswagen genuine parts.*
>
> *Therefore, always observe the torque settings for the wheel bolts as well as the respective fitting and operating instructions.*

36.1 Golf Plus BlueMotion, type 1KP model year 2008 to model year 2009

Appendix for parts certificate 2066/08

The parts certificate can be found on the Volkswagen ServiceNet under Technology; Guides; Wheels and Tyres Guide.

Type Approval No.: e1*2001/116*0304*12 to e1*2001/116*0304*13

Overview

Model engine output	Tyres	Tyre size	Wheel rim	Off-set in mm	Snow chains	Remarks
1.9l 77 kW TDI diesel engine	Standard tyres	195/65 R 15 91T	6 J x 15 ⇒ page 299	47	Yes	General information on: ◆ Winter tyres ⇒ page 15 ◆ Snow chains ⇒ page 18

Protected by copyright. Copyright by Volkswagen AG. Volkswagen AG does not guarantee or accept any liability with respect to the correctness of information in this document. Copying for private or commercial purposes, in part or in whole, is not permitted unless authorised by Volkswagen AG.
satelettronica

Model engine output	Tyres	Tyre size	Wheel rim	Off-set in mm	Snow chains	Remarks
	Modification	195/65 R 15 91H/V	6 J x 15 ⇒ page 299	47	Yes	Tyre makes recommended by Volkswagen: ◆ Summer tyres ⇒ page 649 ◆ Winter tyres ⇒ page 685
		195/65 R 15 91T/H/V	6 1/2 J x 15 ⇒ page 300	50	Yes	
		205/60 R 15 91T/H/V	6 J x 15 ⇒ page 299	47	Yes	
		205/55 R 16 91T/H/V/W	6 1/2 J x 16 ⇒ page 301	50	No	
	Winter tyres	195/65 R 15 91Q/T/H	6 J x 15 ⇒ page 299	47	Yes	

Tyre inflation pressures are located on a sticker in the fuel tank flap or in ⇒ Maintenance ; Booklet ; Check tyres: condition, profile, inflation pressure, depth of tread .

36.2 Wheel allocation for Golf Plus BlueMotion, type 1KP model year 2008 to model year 2009

Explanation of information on wheels ⇒ page 59

Torque specifications for wheel bolts ⇒ Running gear, axles, steering; Rep. gr. 44 ; Torque specifications for fitting wheels

Pitch circle diameter:	112 mm
Number of wheel bolt holes:	5

36.2.1 6 J x 15

Caution

Observe the allocation of wheels and tyres to the respective engines, which are listed in the overview table ⇒ page 298 .

1K0 601 027 C, 1K0 601 027 H - Wheel and tyre combination ⇒ page 298

Size:	6 J x 15
Wheel offset in mm:	47
Wheel load in kg:	615

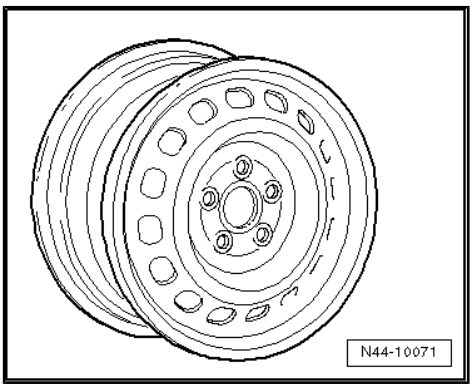

Protected by copyright. Copying for private or commercial purposes, in part or in whole, is not permitted unless authorised by Volkswagen AG. Volkswagen AG does not guarantee or accept any liability with respect to the correctness of information in this document. Copyright by Volkswagen AG.
satelettronica

1K0 601 027 T - Wheel and tyre combination ⇒ page 298

Size:	6 J x 15
Wheel offset in mm:	47
Wheel load in kg:	615

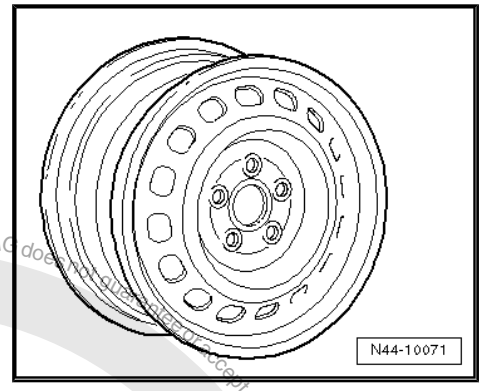

2K0 601 027 - Wheel and tyre combination ⇒ page 298

Size:	6 J x 15
Wheel offset in mm:	47
Wheel load in kg:	650

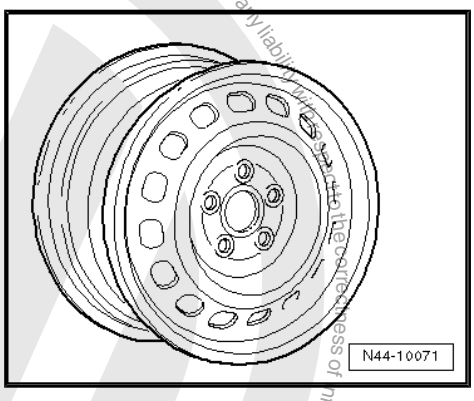

36.2.2 6 1/2 J x 15

Caution

Observe the allocation of wheels and tyres to the respective engines, which are listed in the overview table *⇒ page 298* *.*

1K0 601 025 A - Wheel and tyre combination ⇒ page 299

Size:	6 1/2 J x 15
Wheel offset in mm:	50
Wheel load in kg:	600

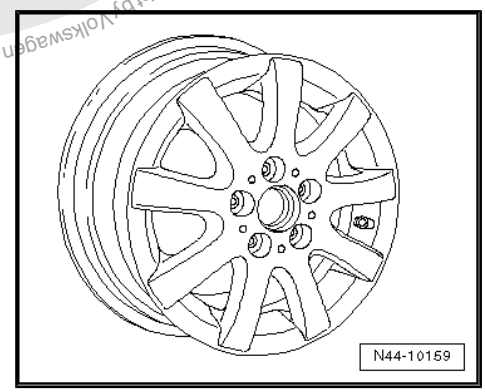

1K0 601 025 AK - Wheel and tyre combination ⇒ page 299

Size:	6 1/2 J x 15
Wheel offset in mm:	50
Wheel load in kg:	600

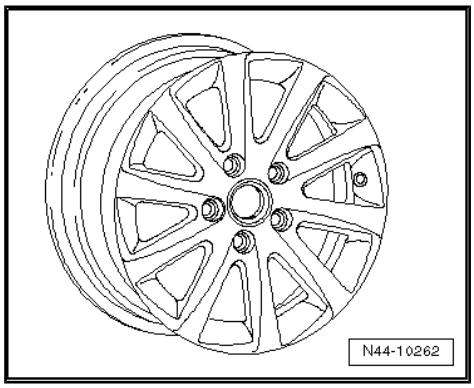

Protected by copyright. Copyright by Volkswagen AG.
Copyright by Volkswagen AG. Volkswagen AG does not guarantee or accept any liability with respect to the correctness of information in this document. Copying for private or commercial purposes, in part or in whole, is not permitted unless authorised by Volkswagen AG.
satelettronica

1K0 601 025 AQ - Wheel and tyre combination ⇒ page 299

Size:	$6^1/_2$ J x 15
Wheel offset in mm:	50
Wheel load in kg:	600

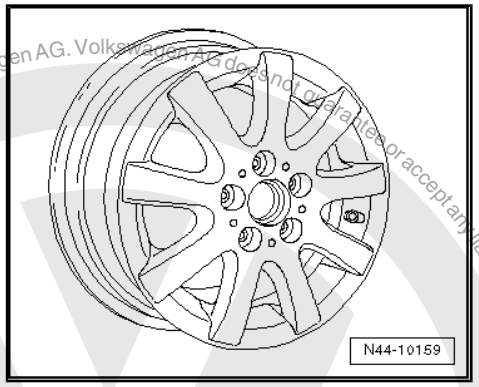

1K0 601 025 CA - Wheel and tyre combination ⇒ page 299

Size:	$6^1/_2$ J x 15
Wheel offset in mm:	50
Wheel load in kg:	600

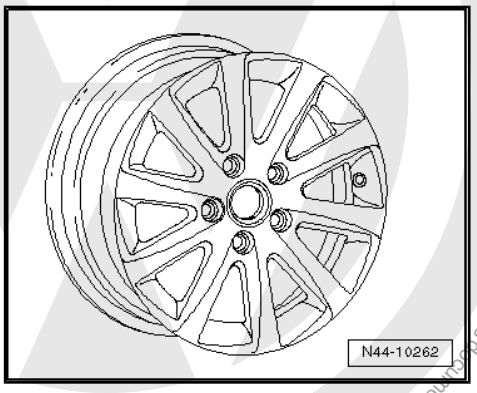

36.2.3 $6^1/_2$ J x 16

Caution

Observe the allocation of wheels and tyres to the respective engines, which are listed in the overview table ⇒ page 298 *.*

1K0 601 027 A - Wheel and tyre combination ⇒ page 299

Size:	$6^1/_2$ J x 16
Wheel offset in mm:	50
Wheel load in kg:	615

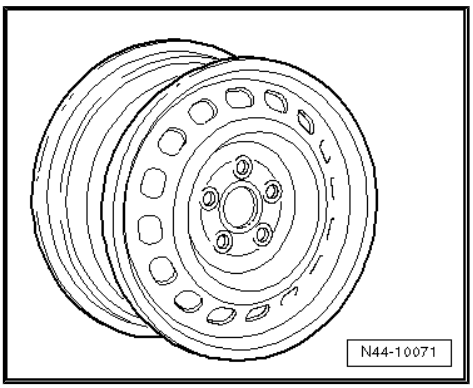

1K0 601 027 J, 1K0 601 027 K - Wheel and tyre combination ⇒ page 299

Size:	$6^1/_2$ J x 16
Wheel offset in mm:	50
Wheel load in kg:	615

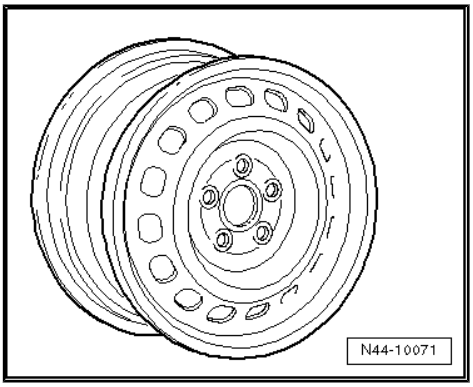

Protected by copyright. Copying for private or commercial purposes, in part or in whole, is not permitted unless authorised by Volkswagen AG. Volkswagen AG does not guarantee or accept any liability with respect to the correctness of information in this document. Copyright by Volkswagen AG.
satelettronica

1K0 601 025 AJ - Wheel and tyre combination ⇒ page 299

Size:	$6^1/_2$ J x 16
Wheel offset in mm:	50
Wheel load in kg:	615

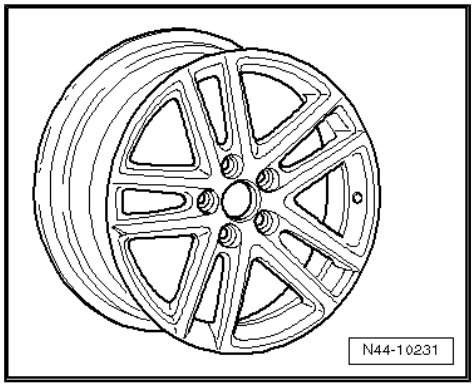

1K0 601 025 BC - Wheel and tyre combination ⇒ page 299

Size:	$6^1/_2$ J x 16
Wheel offset in mm:	50
Wheel load in kg:	615

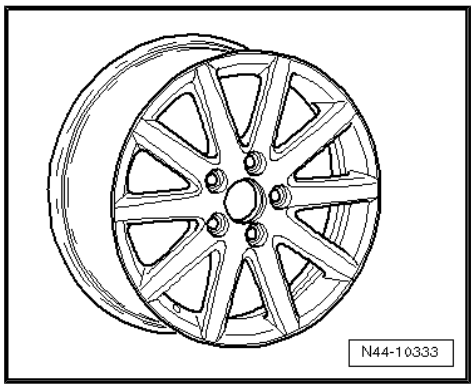

1K0 601 025 BM - Wheel and tyre combination ⇒ page 299

Size:	$6^1/_2$ J x 16
Wheel offset in mm:	50
Wheel load in kg:	615

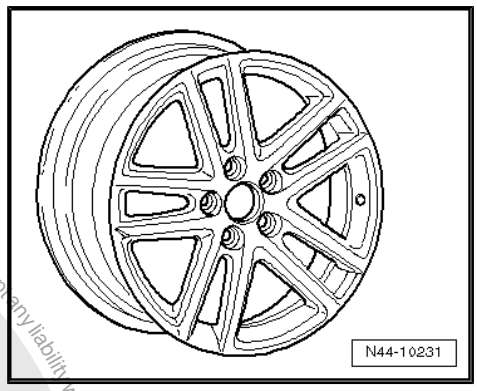

1K0 601 025 BR - Wheel and tyre combination ⇒ page 299

Size:	$6^1/_2$ J x 16
Wheel offset in mm:	50
Wheel load in kg:	615

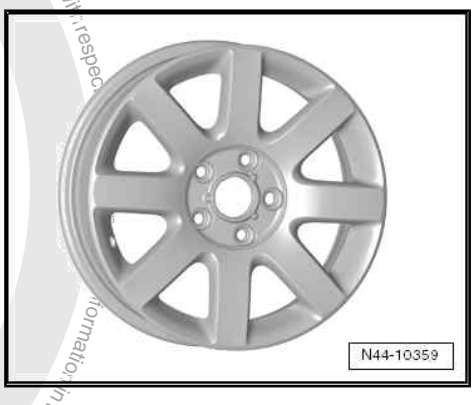

Protected by copyright. Copying for private or commercial purposes, in part or in whole is not permitted unless authorised by Volkswagen AG. Volkswagen AG does not guarantee or accept any liability with respect to the correctness of information in this document. Copyright by Volkswagen AG.

satelettronica

1K0 601 025 BS - Wheel and tyre combination ⇒ page 299

Size:	$6^1/_2$ J x 16
Wheel offset in mm:	50
Wheel load in kg:	615

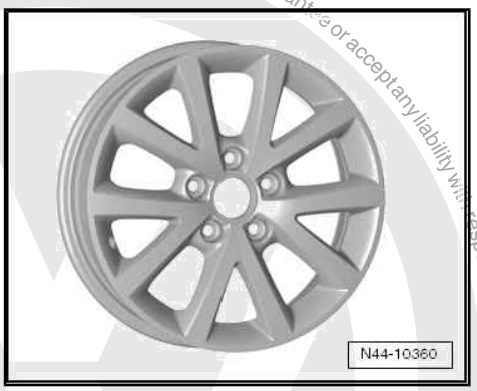

1K0 601 025 CB - Wheel and tyre combination ⇒ page 299

Size:	$6^1/_2$ J x 16
Wheel offset in mm:	50
Wheel load in kg:	615

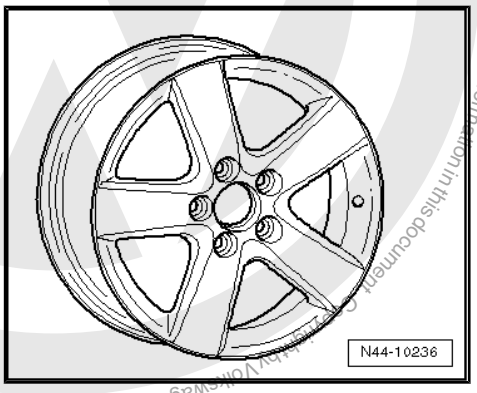

1K0 601 025 CG - Wheel and tyre combination ⇒ page 299

Size:	$6^1/_2$ J x 16
Wheel offset in mm:	50
Wheel load in kg:	615

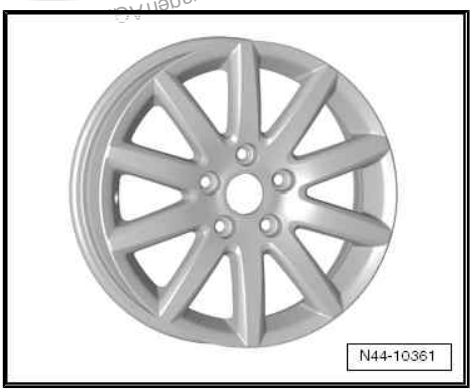

1T0 601 025 C - Wheel and tyre combination ⇒ page 299

Size:	$6^1/_2$ J x 16
Wheel offset in mm:	50
Wheel load in kg:	615

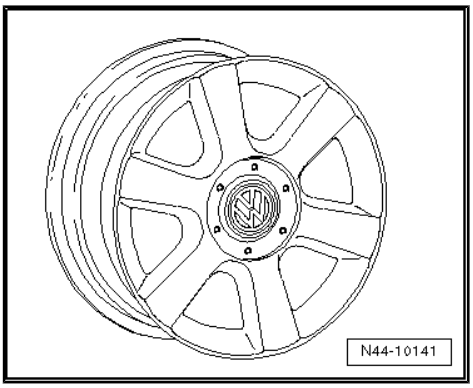

Protected by copyright. Copying for private or commercial purposes, in part or in whole, is not permitted unless authorised by Volkswagen AG. Volkswagen AG does not guarantee or accept any liability with respect to the correctness of information in this document.
satelettronica

1K0 601 025 F - Wheel and tyre combination ⇒ page 299

Size:	$6^1/_2$ J x 16
Wheel offset in mm:	50
Wheel load in kg:	615

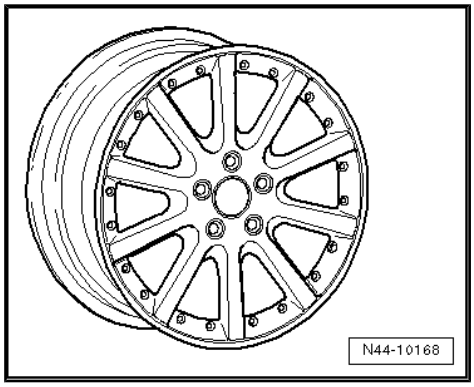

1K0 601 025 P - Wheel and tyre combination ⇒ page 299

Size:	$6^1/_2$ J x 16
Wheel offset in mm:	50
Wheel load in kg:	615

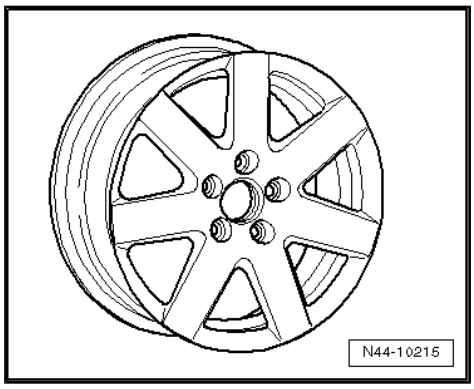

1K0 601 025 R - Wheel and tyre combination ⇒ page 299

Size:	$6^1/_2$ J x 16
Wheel offset in mm:	50
Wheel load in kg:	615

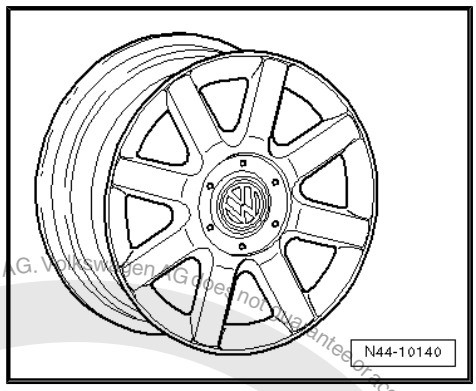

1T0 601 025 G, 1T0 601 025 K - Wheel and tyre combination ⇒ page 299

Size:	$6^1/_2$ J x 16
Wheel offset in mm:	50
Wheel load in kg:	615

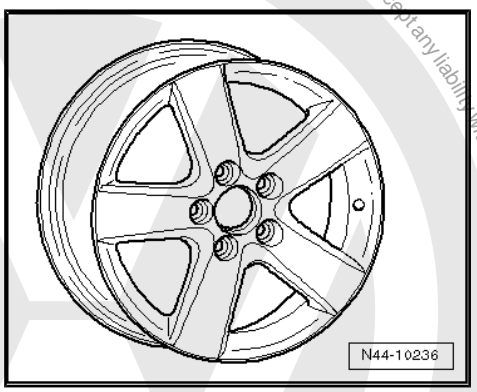

Protected by copyright. Copying for private or commercial purposes, in part or in whole, is not permitted unless authorised by Volkswagen AG. Volkswagen AG does not guarantee or accept any liability with respect to the correctness of information in this document. Copyright by Volkswagen AG.
satelettronica

1T0 601 025 M - Wheel and tyre combination ⇒ page 299

Size:	6 1/2 J x 16
Wheel offset in mm:	50
Wheel load in kg:	615

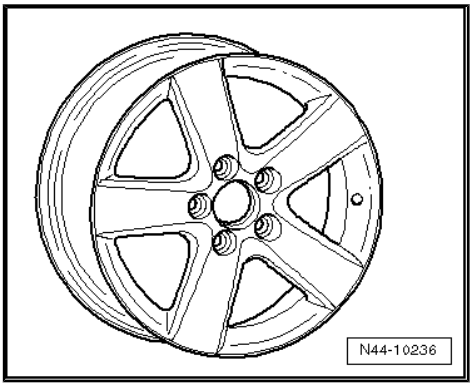

1T0 601 025 R - Wheel and tyre combination ⇒ page 299

Size:	6 1/2 J x 16
Wheel offset in mm:	50
Wheel load in kg:	615

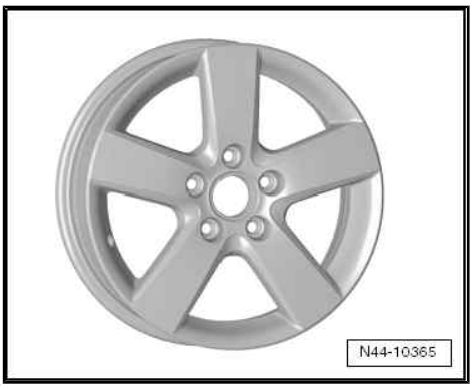

Protected by copyright. Copying for private or commercial purposes, in part or in whole, is not permitted unless authorised by Volkswagen AG. Volkswagen AG does not guarantee or accept any liability with respect to the correctness of information in this document. Copyright by Volkswagen AG.
satelettronica

37 Golf Variant model year 1994 to model year 1998

General

Volkswagen vehicles are built according to the latest findings in safety engineering. To keep it that way, we recommend the use of only genuine Volkswagen spare parts. You can recognise this by the VW Audi logo and by the part number. It has been established that these parts are reliable, safe and suitable.

Despite constant appraisal of the market, we cannot assess other products on these points, even when in isolated cases they have been passed by official inspectors or have been granted official approval. Therefore, we cannot, of course, assume any liability if these products are installed.

WARNING

The products from Volkswagen genuine parts and Votex genuine accessories may differ in fitting requirements, torque specifications and so on.

Always follow the respective fitting and operating instructions.

The wheel and tyre combinations or changes listed in the vehicle tables refer exclusively to Volkswagen Genuine wheels. Approval of wheel and tyre combinations or a change to wheels from the accessories trade is not possible with the parts certificate attached here.

WARNING

The fitting instructions and torque specifications for wheels from Votex genuine accessories may differ from those intended for wheels from Volkswagen genuine parts.

Therefore, always observe the torque settings for the wheel bolts as well as the respective fitting and operating instructions.

37.1 Golf Variant type 1HX0, Golf Variant Syncro type 1HX1, Golf Variant type 1H

Appendix 2 to Parts Certificate 1479/00

Protected by copyright. Copyright by Volkswagen AG. Volkswagen AG does not guarantee or accept any liability with respect to the correctness of information in this document. Copyright by Volkswagen AG.
satelettronica

Golf Variant; type 1HX0 from model year 1994 to model year 1997

General type approval No.: F 804

Golf Variant Syncro; type 1HX1 from model year 1994 to model year 1997

General type approval No.: G 156

Golf Variant; type 1H model year 1998

Type Approval No. e1*96/79*0068*00 to e1*96/79*0068*03

Overview

Model engine output	Tyres	Tyre size	Wheel rim	Off-set in mm	Snow chains	Remarks
40 kW, 44 kW	Standard tyres	175/70 R 13 82T	5 1/2 J x 13 ⇒ page 310	38	Yes	The 175/70 R 13 82S/T/Q tyres are no longer permitted on vehicles with ABS from 05.96.
	Modification	175/70 R 13 82S	5 1/2 J x 13 ⇒ page 310	38	Yes	
		185/60 R 14 82T	6 J x 14 ⇒ page 310	43/45	Yes	
		195/60 R 14 85T* ⇒ page 307	6 J x 14 ⇒ page 310	43/45	Yes	*Vehicles from model year 1995 require tyres with LI 86
		195/50 R 15 82H	6 J x 15 ⇒ page 313	45	Yes	
	Winter tyres	175/70 R 13 82Q	5 1/2 J x 13 ⇒ page 310	38	Yes	General information on: ◆ Winter tyres ⇒ page 15 ◆ Snow chains ⇒ page 18
47 kW, 55 kW CL, GL diesel engine; 55 kW CL, GL petrol engine	Standard tyres	185/60 R 14 82H	6 J x 14 ⇒ page 310	43/45	Yes	Tyre makes recommended by Volkswagen: ◆ Summer tyres ⇒ page 642 ◆ All-season tyres ⇒ page 668 ◆ Winter tyres ⇒ page 681
	Modification	185/60 R 14 82T	6 J x 14 ⇒ page 310	43/45	Yes	
		195/60 R 14 85T* ⇒ page 307	6 J x 14 ⇒ page 310	43/45	Yes	
		195/50 R 15 82H	6 J x 15 ⇒ page 313	45	Yes	
	Winter tyres	175/65 R 14 82Q	6 J x 14 ⇒ page 310	43/45	Yes	

Protected by copyright. Copying for private or commercial purposes, in part or in whole, is not permitted unless authorised by Volkswagen AG. Volkswagen AG does not guarantee or accept any liability with respect to the correctness of information in this document. Copyright by Volkswagen AG.

satelettronica

Model engine output	Tyres	Tyre size	Wheel rim	Off-set in mm	Snow chains	Remarks
66 kW TDI; 66 kW CL, GT	Standard tyres	195/50 R 15 86H	6 J x 15 ⇒ page 313	43/45	Yes	
	Modification	185/60 R 14 82T	6 J x 14 ⇒ page 310	43/45	Yes	
		195/60 R 14 85T* ⇒ page 307	6 J x 14 ⇒ page 310	43/45	Yes	
		195/50 R 15 82H	6 J x 15 ⇒ page 313	45	Yes	
	Winter tyres	175/65 R 14 82Q	6 J x 14 ⇒ page 310	43/45	Yes	
Variant “Special” 66 kW GT; 55 kW GTD 66 kW TDI	Standard tyres	195/50 R 15 86V	6 J x 15 ⇒ page 313	45	Yes	
	Modification	185/60 R 14 82T	6 J x 14 ⇒ page 310	43/45	Yes	
		195/60 R 14 85T* ⇒ page 307	6 J x 14 ⇒ page 310	43/45	Yes	
		195/50 R 15 82H	6 J x 15 ⇒ page 313	45	Yes	
	Winter tyres	175/65 R 14 82Q	6 J x 14 ⇒ page 310	43/45	Yes	
74 kW; 81 kW TDI 85 kW CL, GL	Standard tyres	195/60 R 14 86H	6 J x 14 ⇒ page 310	43/45	Yes	
	Modification	195/60 R 14 85H* ⇒ page 307	6 J x 14 ⇒ page 310	43/45	Yes	
		195/50 R 15 82H	6 J x 15 ⇒ page 313	45	Yes	
	Winter tyres	175/65 R 14 82Q	6 J x 14 ⇒ page 310	43/45	Yes	
Variant “Special” 85 kW GT	Standard tyres	195/60 R 15 82V	6 J x 15 ⇒ page 313	45	Yes	
	Modification	195/60 R 14 85H	6 J x 14 ⇒ page 310	43/45	Yes	
		195/50 R 15 82H	6 J x 15 ⇒ page 313	45	Yes	
	Winter tyres	175/65 R 14 82Q	6 J x 14 ⇒ page 310	43/45	Yes	

Protected by copyright. Copying for private or commercial purposes, in part or in whole, is not permitted unless authorised by Volkswagen AG. Volkswagen AG does not guarantee or accept any liability with respect to the correctness of information in this document. Copyright by Volkswagen AG.
satelettronica

Model engine output	Tyres	Tyre size	Wheel rim	Off-set in mm	Snow chains	Remarks
Variant Syncro 66 kW TDI 66 kW petrol engine	Standard tyres	195/60 R 14 86T* ⇒ page 307	6 J x 14 ⇒ page 312	43/45	Yes	Syncro vehicles: Snow chains are permitted on the front wheels only.
		195/60 R 14 85T	6 J x 14 ⇒ page 312	43/45	Yes	
	Modification	No changes are permissible apart from the standard wheel and tyre combinations!				
	Winter tyres	195/60 R 14 85Q* ⇒ page 307	6 J x 14 ⇒ page 312	43/45	Yes	
Variant Syncro 85 kW	Standard tyres	195/60 R 14 86H	6 J x 14 ⇒ page 312	43/45	Yes	
	Modification	No changes are permissible apart from the standard wheel and tyre combinations!				
	Winter tyres	195/60 R 14 86Q	6 J x 14 ⇒ page 312	43/45	Yes	
Variant Syncro 140 kW VR6	Standard tyres	205/50 R 15 86W	$6^1/_2$ J x 15 ⇒ page 316	43	Yes	**Tyres with this double rating were offered by tyre dealers only during a transition period after which W tyres were offered.
	Modification	205/50 ZR 15 86W** ⇒ page 309	$6^1/_2$ J x 15 ⇒ page 316	43	Yes	
	Winter tyres	185/55 R 15 81T reinforced	6 J x 15 ⇒ page 315	35	Yes	

Tyre pressures can be found on the inside of the fuel tank flap or in ⇒ Maintenance ; Booklet 35

37.2 Wheel allocation for Golf Variant type 1HX0, Golf Variant Syncro type 1HX1, Golf Variant type 1H

Explanation of information on wheels ⇒ page 59

Torque specifications for wheel bolts ⇒ Running gear; Rep. gr. 40 ; Repairing front suspension (basic running gear); Removing and installing wheel bearing, strut, drive shaft (basic suspension) or ⇒ Running gear; Rep. gr. 40 ; Repairing front suspension (plus running gear); Removing and installing wheel bearing, strut (plus running gear)

Pitch circle diameter: 100 mm

Copyright by Volkswagen AG. Volkswagen AG does not accept any liability with respect to the correctness of the information in this document. Copyright by Volkswagen AG. Protected by copyright. Copying for private or commercial purposes, in part or in whole, is not permitted unless authorised by Volkswagen AG.
satelettronica

37.2.1 5 1/2 J x 13

Caution

Observe the allocation of wheels and tyres to the respective engines, which are listed in the overview table ⇒ page 307 .

Variant 1.4l with manual gearbox

1H0 601 025 A - Wheel and tyre combination ⇒ page 307

Size:	5 1/2 J x 13
Wheel offset in mm:	38
Wheel load in kg:	450
Number of wheel bolt holes:	4

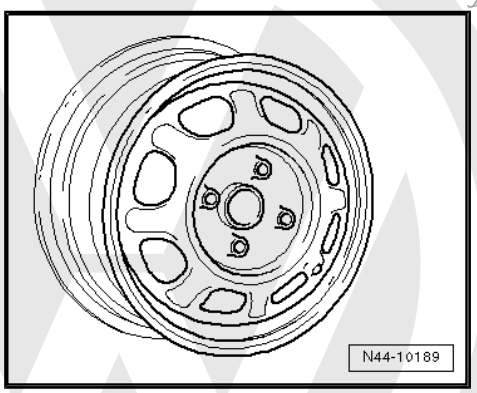

321 601 025 J/M - Wheel and tyre combination ⇒ page 307

Size:	5 1/2 J x 13
Wheel offset in mm:	38
Wheel load in kg:	460
Number of wheel bolt holes:	4

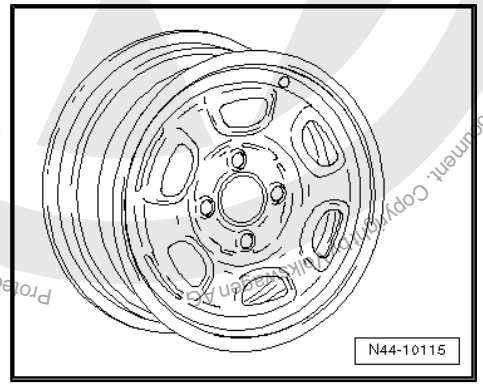

37.2.2 6 J x 14

Caution

Observe the allocation of wheels and tyres to the respective engines, which are listed in the overview table ⇒ page 307 .

Golf Variant to 85 kW petrol engine, Golf Variant to 55 kW diesel engine with manual gearbox

811 601 025 P - Wheel and tyre combination ⇒ page 307

Note

This rim is allowed only for vehicles with a maximum permitted axle load of 880 kg.

Size:	6 J x 14
Wheel offset in mm:	45
Wheel load in kg:	440
Number of wheel bolt holes:	4

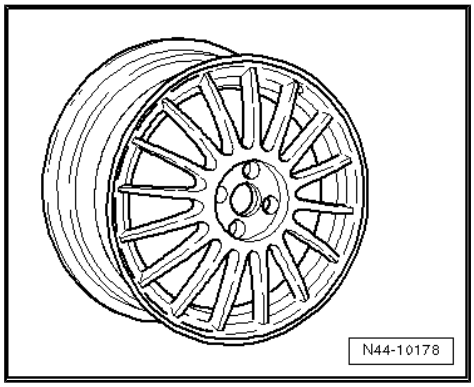

Protected by copyright. Copyright by Volkswagen AG. Volkswagen AG does not guarantee or accept any liability with respect to the correctness of information in this document. Copyright by Volkswagen AG.
satelettronica

1H0 601 025 D - Wheel and tyre combination ⇒ page 307

Size:	6 J x 14
Wheel offset in mm:	45
Wheel load in kg:	450
Number of wheel bolt holes:	4

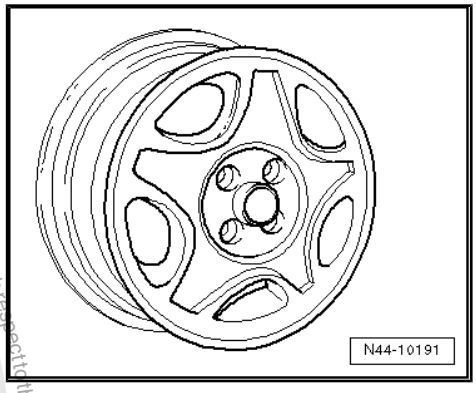

1H0 601 027 - Wheel and tyre combination ⇒ page 307

Size:	6 J x 14
Wheel offset in mm:	45
Wheel load in kg:	500
Number of wheel bolt holes:	4

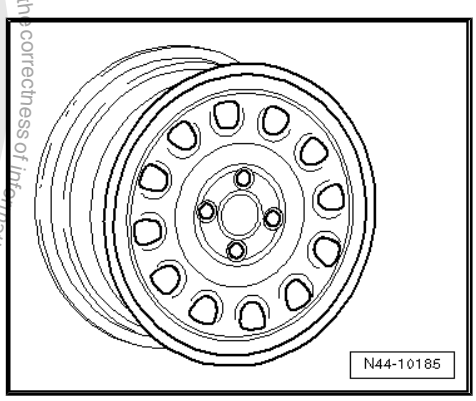

1H0 601 027 A - Wheel and tyre combination ⇒ page 307

Size:	6 J x 14
Wheel offset in mm:	43
Wheel load in kg:	500
Number of wheel bolt holes:	4

Variant to 85 kW petrol and diesel engines

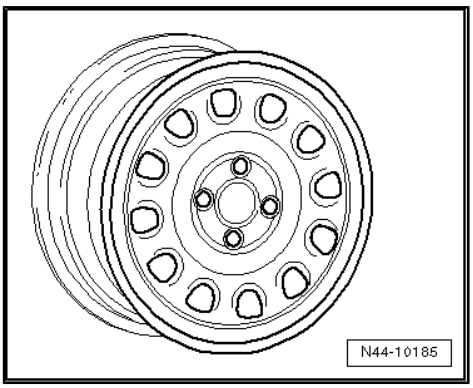

1H0 601 025 P - Wheel and tyre combination ⇒ page 307

Size:	6 J x 14
Wheel offset in mm:	45
Wheel load in kg:	460
Number of wheel bolt holes:	4

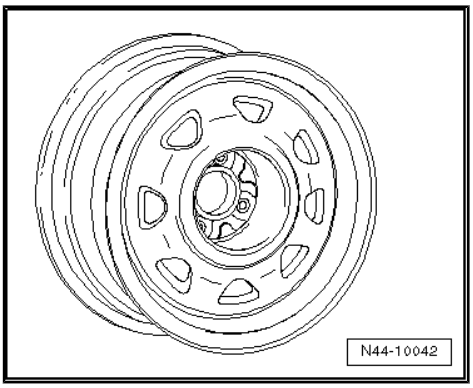

Protected by copyright. Copying for private or commercial purposes, in part or in whole, is not permitted unless authorised by Volkswagen AG. Volkswagen AG does not guarantee or accept any liability with respect to the correctness of information in this document. Copyright by Volkswagen AG.
satelettronica

1HM 601 025 - Wheel and tyre combination ⇒ page 307

Size:	6 J x 14
Wheel offset in mm:	45
Wheel load in kg:	460
Number of wheel bolt holes:	4

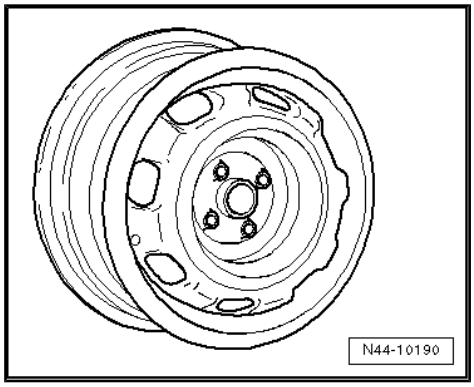

1H0 601 025 B - Wheel and tyre combination ⇒ page 307

Size:	6 J x 14
Wheel offset in mm:	45
Wheel load in kg:	460
Number of wheel bolt holes:	4

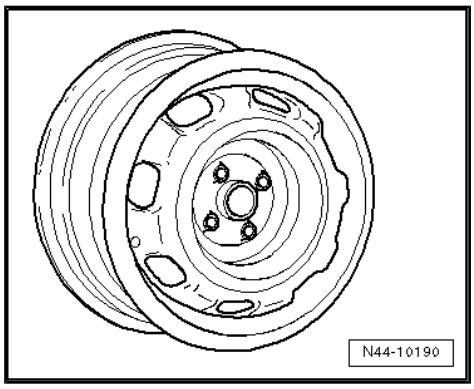

1H0 601 027 A - Wheel and tyre combination ⇒ page 307

Size:	6 J x 14
Wheel offset in mm:	43
Wheel load in kg:	500
Number of wheel bolt holes:	4

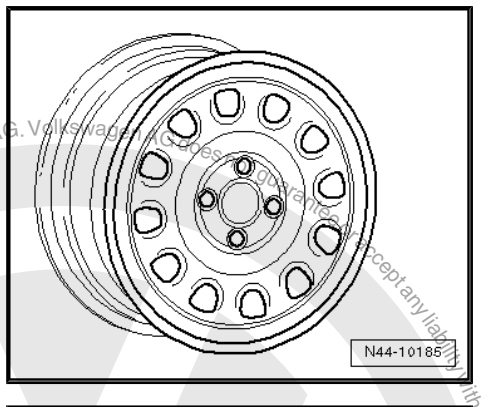

1H0 601 025 R - Wheel and tyre combination ⇒ page 307

Size:	6 J x 14
Wheel offset in mm:	45
Wheel load in kg:	500
Number of wheel bolt holes:	4

Variant Syncro to 85 kW petrol and diesel engines

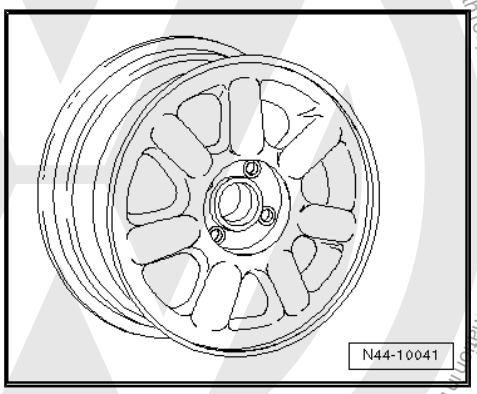

Protected by copyright. Copying for private or commercial purposes, in part or in whole is not permitted unless authorised by Volkswagen AG. Volkswagen AG does not guarantee or accept any liability with respect to the correctness of information in this document. Copyright by Volkswagen AG.
satelettronica

1H1 601 027 - Wheel and tyre combination ⇒ page 309

Size:	6 J x 14
Wheel offset in mm:	45
Wheel load in kg:	480
Number of wheel bolt holes:	4

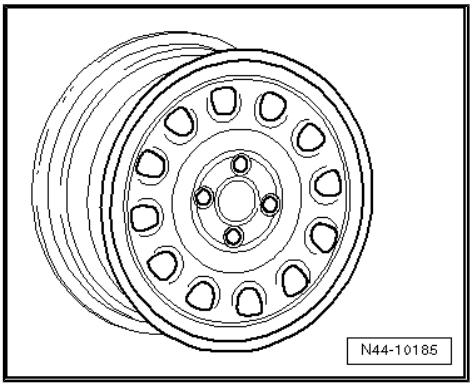

1H1 601 027 A - Wheel and tyre combination ⇒ page 309

Size:	6 J x 14
Wheel offset in mm:	45
Wheel load in kg:	500
Number of wheel bolt holes:	4

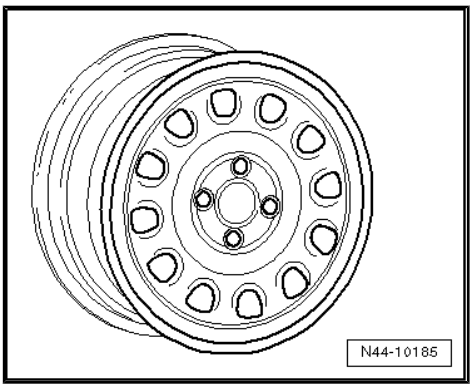

1H0 601 025 R - Wheel and tyre combination ⇒ page 309

Size:	6 J x 14
Wheel offset in mm:	45
Wheel load in kg:	500
Number of wheel bolt holes:	4

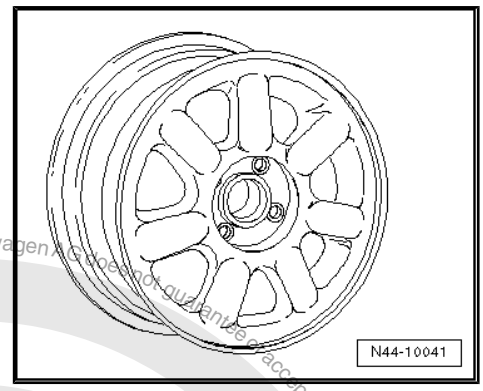

37.2.3 6 J x 15

Caution

Observe the allocation of wheels and tyres to the respective engines, which are listed in the overview table ⇒ page 307 *.*

Protected by copyright. Copying for private or commercial purposes, in part or whole, is not permitted unless authorised by Volkswagen AG. Volkswagen AG does not guarantee or accept any liability with respect to the correctness of information in this document. Copyright by Volkswagen AG.

satelettronica

Protected by copyright. Copying for private or commercial purposes, in part or in whole, is not permitted unless authorised by Volkswagen AG. Volkswagen AG does not guarantee or accept any liability with respect to the correctness of information

Golf Variant to 85 kW petrol engine, Golf Variant to 55 kW diesel engine with manual gearbox

1H0 601 025 E - Wheel and tyre combination ⇒ page 307

Size:	6 J x 15
Wheel offset in mm:	45
Wheel load in kg:	450
Number of wheel bolt holes:	4

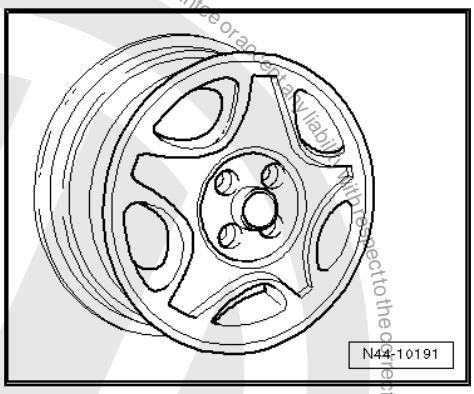

1H0 601 025 L - Wheel and tyre combination ⇒ page 307

Size:	6 J x 15
Wheel offset in mm:	45
Wheel load in kg:	450
Number of wheel bolt holes:	4

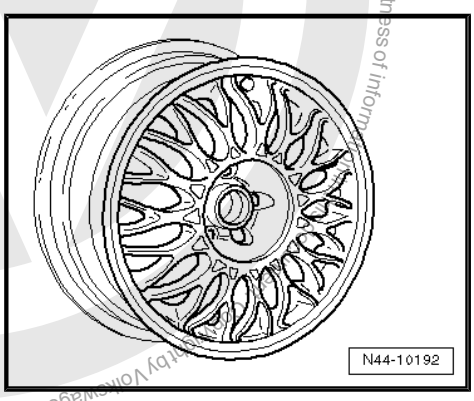

1H0 601 025 Q - Wheel and tyre combination ⇒ page 307

Size:	6 J x 15
Wheel offset in mm:	45
Wheel load in kg:	450
Number of wheel bolt holes:	4

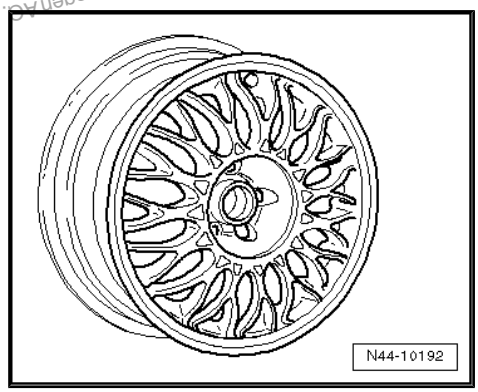

1H0 601 025 AD - Wheel and tyre combination ⇒ page 307

Size:	6 J x 15
Wheel offset in mm:	45
Wheel load in kg:	460
Number of wheel bolt holes:	4

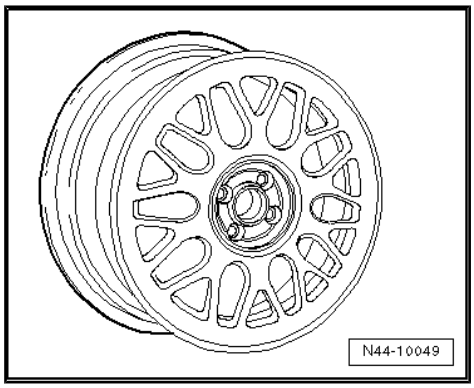

Variant to 85 kW petrol and diesel engines

satelettronica

1H0 601 025 AD - Wheel and tyre combination ⇒ page 307

Size:	6 J x 15
Wheel offset in mm:	45
Wheel load in kg:	460
Number of wheel bolt holes:	4

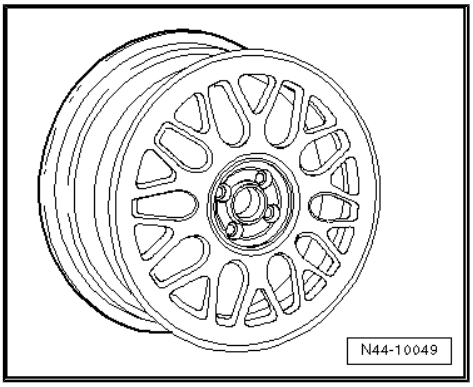

1H0 601 025 AE - Wheel and tyre combination ⇒ page 307

Size:	6 J x 15
Wheel offset in mm:	45
Wheel load in kg:	480
Number of wheel bolt holes:	4

VR6 Syncro - possible only for winter tyres

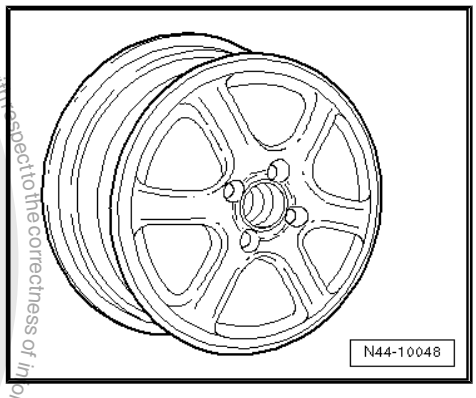

3A0 601 027 - Wheel and tyre combination ⇒ page 309

Size:	6 J x 15
Wheel offset in mm:	35
Wheel load in kg:	530
Number of wheel bolt holes:	5

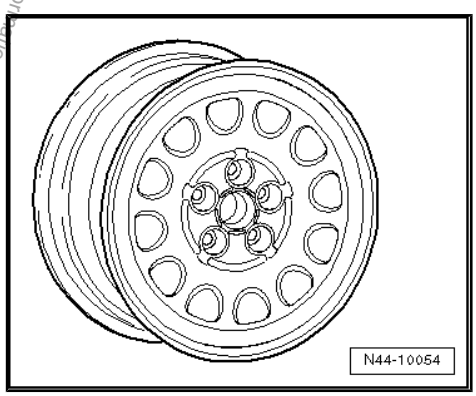

1H0 601 025 J - Wheel and tyre combination ⇒ page 309

Size:	6 J x 15
Wheel offset in mm:	38
Wheel load in kg:	530
Number of wheel bolt holes:	5

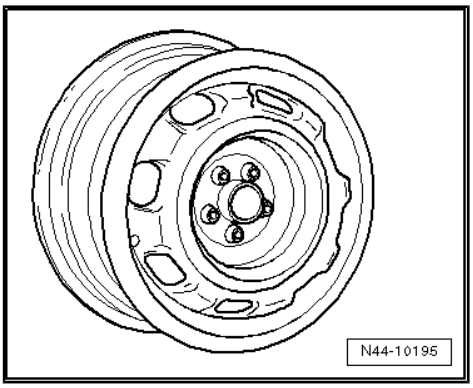

Protected by copyright. Copying for private or commercial purposes, in part or in whole, is not permitted unless authorised by Volkswagen AG. Volkswagen AG does not guarantee or accept any liability with respect to the correctness of information in this document. Copyright by Volkswagen AG.
satelettronica

Protected by copyright. Copyright by Volkswagen AG. Volkswagen AG does not guarantee or accept any liability with respect to the correctness of information in this document. Copyright by Volkswagen AG. Copying for private or commercial purposes, in part or in whole, is not permitted unless authorised by Volkswagen AG.

37.2.4 6$^1/_2$ J x 15

VR6 Syncro

1H0 601 025 AA - Wheel and tyre combination ⇒ page 309

Size:	6$^1/_2$ J x 15
Wheel offset in mm:	43
Wheel load in kg:	500
Number of wheel bolt holes:	5

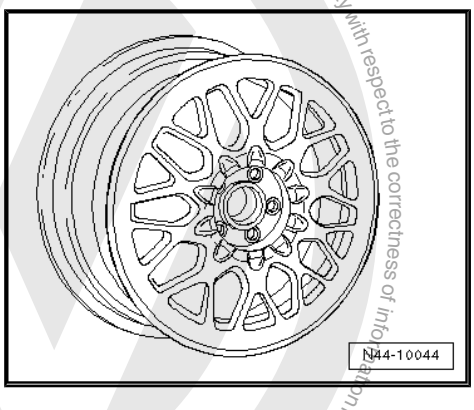

satelettronica

38 Golf Variant model year 1999 to model year 2006, Bora Variant model year 1999 to model year 2005

General

Volkswagen vehicles are built according to the latest findings in safety engineering. To keep it that way, we recommend the use of only genuine Volkswagen spare parts. You can recognise this by the VW Audi logo and by the part number. It has been established that these parts are reliable, safe and suitable.

Despite constant appraisal of the market, we cannot assess other products on these points, even when in isolated cases they have been passed by official inspectors or have been granted official approval. Therefore, we cannot, of course, assume any liability if these products are installed.

WARNING

The products from Volkswagen genuine parts and Votex genuine accessories may differ in fitting requirements, torque specifications and so on.

Always follow the respective fitting and operating instructions.

The wheel and tyre combinations or changes listed in the vehicle tables refer exclusively to Volkswagen Genuine wheels. Approval of wheel and tyre combinations or a change to wheels from the accessories trade is not possible with the parts certificate attached here.

WARNING

The fitting instructions and torque specifications for wheels from Votex genuine accessories may differ from those intended for wheels from Volkswagen genuine parts.

Therefore, always observe the torque settings for the wheel bolts as well as the respective fitting and operating instructions.

38.1 Golf Variant, Golf Variant 4Motion, Bora Variant, Bora Variant 4Motion, type 1J

Golf Variant, Golf Variant 4Motion; type 1J model year 1999 to model year 2006

Bora Variant, Bora Variant 4Motion; type 1J model year 1999 to model year 2005

Appendix 2 to Parts Certificate 1958/04

satelettronica

Type Approval No.: e1*96/79*0071*08 to e1*96/79*0071*09

Type Approval No.: e1*98/14*0071*10 to e1*98/14*0071*30

Type Approval No.: e1*2001/116*0071*31 to e1*2001/116*0071*36

Overview

Model engine output	Tyres	Tyre size	Wheel rim	Off-set in mm	Snow chains	Remarks
1.4l 55 kW petrol engine; 1.9l 50 kW diesel engine	Standard tyres	195/65 R 15 91T	6 J x 15 ⇒ page 320	38	Yes	General information on: ◆ Winter tyres ⇒ page 15 ◆ Snow chains ⇒ page 18
	Modification	205/55 R 16 91H	$6^1/_2$ J x 16 ⇒ page 324	42	No	Tyre makes recommended by Volkswagen: ◆ Summer tyres ⇒ page 650 ◆ All-season tyres ⇒ page 671 ◆ Winter tyres ⇒ page 686
		225/45 R 17 91W	7 J x 17 ⇒ page 328	38	No	
	Winter tyres	195/65 R 15 91Q/T	6 J x 15 ⇒ page 320	38	Yes	
		205/55 R 16 91T/H	$5^1/_2$ J x 16 ⇒ page 323	36	Yes	
1.9l 66 kW TDI	Standard tyres	195/65 R 15 91T	6 J x 15 ⇒ page 320	38	Yes	The 225/45 R 17 tyre may be mounted on the 7 J x 17 or the $7^1/_2$ J x 17 rim only if the listed conditions ⇒ page 331 are fulfilled!
	Modification	205/55 R 16 91H	$6^1/_2$ J x 16 ⇒ page 324	42	No	
		225/45 R 17 91W	7 J x 17 ⇒ page 328	38	No	
		225/45 R 17 91W	$7^1/_2$ J x 17 ⇒ page 330	38	No	
	Winter tyres	195/65 R 15 91Q/T	6 J x 15 ⇒ page 320	38	Yes	
		205/55 R 16 91T/H	$5^1/_2$ J x 16 ⇒ page 323	36	Yes	

satelettronica

Model engine output	Tyres	Tyre size	Wheel rim	Off-set in mm	Snow chains	Remarks
1.6l 74 kW, 75 kW, 77 kW, 81 kW, 2.0l 85 kW petrol engine; 2.0l 85 kW BI FUEL 1.9l 74 kW, 81 kW, 85 kW TDI	Standard tyres	195/65 R 15 91H	6 J x 15 ⇒ page 320	38	Yes	The adhesive weights for balancing must be attached to the inner side of the rim of 6 1/2 J x 16 aluminium wheels!
	Modification	205/55 R 16 91H	6 1/2 J x 16 ⇒ page 324	42	No	4Motion vehicles: Snow chains are permitted on the front wheels only.
		225/45 R 17 91W	7 J x 17 ⇒ page 328	38	No	
		225/45 R 17 91W	7 1/2 J x 17 ⇒ page 330	38	No	
	Winter tyres	195/65 R 15 91Q/T	6 J x 15 ⇒ page 320	38	Yes	
		205/55 R 16 91T/H	5 1/2 J x 16 ⇒ page 323	36	Yes	
1.8l 92 kW; 1.8l 110 kW; 2.3l 110 kW petrol engines; 1.9l 96 kW TDI; 1.9l 110 kW TDI	Standard tyres	195/65 R15 91V	6 J x 15 ⇒ page 320	38	Yes	
	Modification	205/55 R 16 91V	6 1/2 J x 16 ⇒ page 324	42	No	
		225/45 R 17 91W	7 J x 17 ⇒ page 328	38	No	
		225/45 R 17 91W	7 1/2 J x 17 ⇒ page 330	38	No	
	Winter tyres	195/65 R 15 91Q/T	6 J x 15 ⇒ page 320	38	Yes	
		205/55 R 16 91T/H	5 1/2 J x 16 ⇒ page 323	36	Yes	
1.8l 132 kW; 2.3l 125 kW	Standard tyres	205/55 R 16 91W	6 1/2 J x 16 ⇒ page 326	42	No	
	Modification	205/55 R 16 91H	6 1/2 J x 16 ⇒ page 326	42	No	
		225/45 R 17 91W	7 J x 17 ⇒ page 328	38	No	
		225/45 R 17 91W	7 1/2 J x 17 ⇒ page 330	38	No	

satelettronica
Copyright by Volkswagen AG. Volkswagen AG does not guarantee or accept any liability with respect to the correctness of information in this document. Copyright by Volkswagen AG. Protected by copyright. Copying for private or commercial purposes, in part or in whole, is not permitted unless authorised by Volkswagen AG.

Model engine output	Tyres	Tyre size	Wheel rim	Off-set in mm	Snow chains	Remarks
	Winter tyres	205/55 R 16 91T/H	$5^1/_2$ J x 16 ⇒ page 323	36	Yes	
2.8l 150 kW	Standard tyres	205/55 R 16 91W	$6^1/_2$ J x 16 ⇒ page 326	42	No	
	Modification	225/45 R 17 91W	7 J x 17 ⇒ page 328	38	No	
		225/45 R 17 91W	$7^1/_2$ J x 17 ⇒ page 330	38	No	
	Winter tyres	205/55 R 16 91T/H	$5^1/_2$ J x 16 ⇒ page 323	36	Yes	

Tyre pressures can be found on the inside of the fuel tank flap or in ⇒ Maintenance ; Booklet 37

38.2 Wheel allocation for Golf Variant, Golf Variant 4Motion, Bora Variant, Bora Variant 4Motion, type 1J

Wheel allocation for Golf Variant, Golf Variant 4Motion; type 1J model year 1999 to model year 2006

Wheel allocation for Bora Variant, Bora Variant 4Motion; type 1J model year 1999 to model year 2005

Explanation of information on wheels ⇒ page 59

Wheel bolt torque settings ⇒ Running gear, axles, steering - front and four-wheel drive; Rep. gr. 44 ; Wheel bolt torque settings

Pitch circle diameter:	100 mm
Number of wheel bolt holes:	5

38.2.1 6 J x 15

Caution

Observe the allocation of wheels and tyres to the respective engines, which are listed in the overview table ⇒ page 318 .

Copyright by Volkswagen AG. Volkswagen AG does not guarantee or accept any liability with respect to the correctness of information in this document. Copyright by Volkswagen AG. Reproduction, in whole or in part, for commercial purposes, is not permitted unless authorised by Volkswagen AG.
satelettronica

For vehicles with maximum permitted axle load of 1,000 kg

1J0 601 025 B, 1J0 601 025 AA - Wheel and tyre combination ⇒ page 318

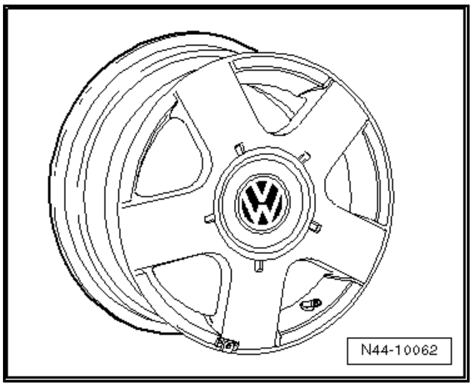

Size:	6 J x 15
Wheel offset in mm:	38
Wheel load in kg:	500

For vehicles with maximum permitted axle load of 1,060 kg

1J0 601 025 Q - Wheel and tyre combination ⇒ page 318

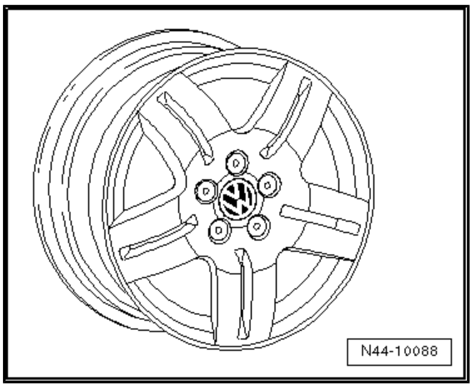

Size:	6 J x 15
Wheel offset in mm:	38
Wheel load in kg:	530

For vehicles up to and including 96 kW and petrol engines to 110 kW

1J0 601 027 K - Wheel and tyre combination ⇒ page 318

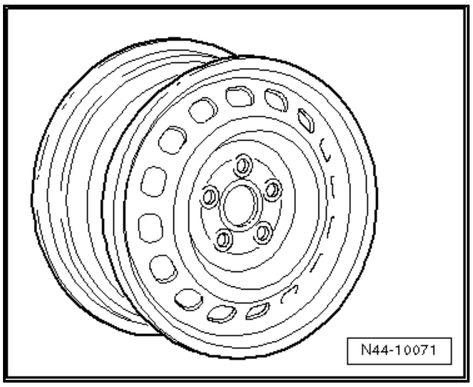

Size:	6 J x 15
Wheel offset in mm:	38
Wheel load in kg:	550

1J0 601 027 H, 1J0 601 027 Q - Wheel and tyre combination ⇒ page 318

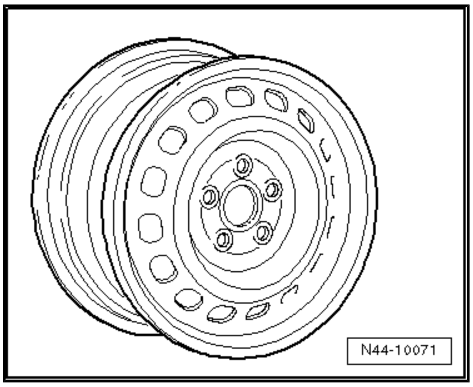

Size:	6 J x 15
Wheel offset in mm:	38
Wheel load in kg:	550

Protected by copyright. Copying for private or commercial purposes, in part or in whole, is not permitted unless authorised by Volkswagen AG. Volkswagen AG does not guarantee or accept any liability with respect to the correctness of information in this document. Copyright by Volkswagen AG.

sateletronica

1J0 601 025 AK - Wheel and tyre combination ⇒ page 318

Size:	6 J x 15
Wheel offset in mm:	38
Wheel load in kg:	580

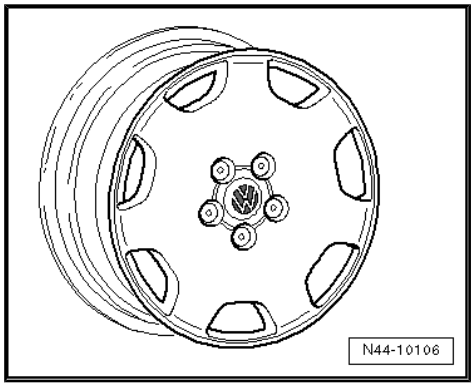

1J0 601 025 P, 1J0 601 025 AL - Wheel and tyre combination ⇒ page 318

Size:	6 J x 15
Wheel offset in mm:	38
Wheel load in kg:	550

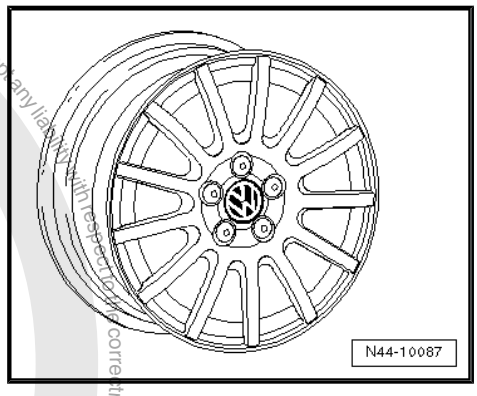

1C0 601 025 F - Wheel and tyre combination ⇒ page 318

Size:	6 J x 15
Wheel offset in mm:	38
Wheel load in kg:	550

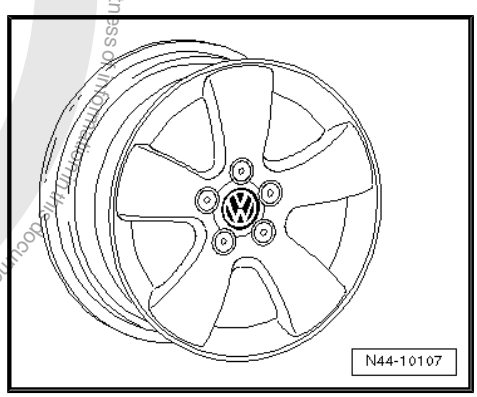

1J0 601 025 BD - Wheel and tyre combination ⇒ page 318

Size:	6 J x 15
Wheel offset in mm:	38
Wheel load in kg:	580

For vehicles with 110 kW TDI and petrol engines 1.8l 132 kW, 2.3l 125 kW, 2.8l 150 kW

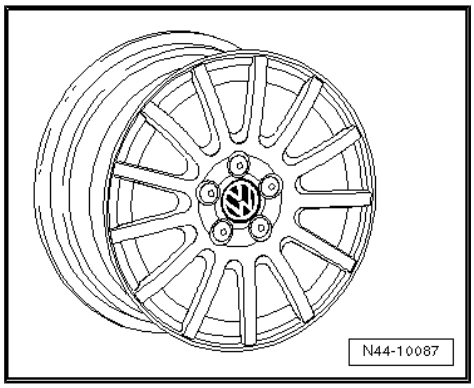

Protected by copyright. Copyright for private or commercial purposes, in part or in whole, is not permitted unless authorised by Volkswagen AG. Volkswagen AG does not guarantee or accept any liability with respect to the correctness of information in this document. Copyright by Volkswagen AG.

satelettronica

1J0 601 025 P, 1J0 601 025 AL - Wheel and tyre combination
⇒ page 319

Size:	6 J x 15
Wheel offset in mm:	38
Wheel load in kg:	550

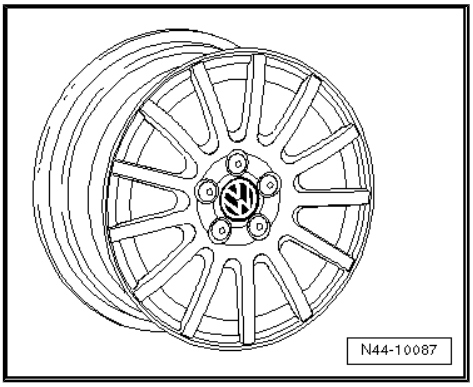

1J0 601 025 BD - Wheel and tyre combination ⇒ page 319

Size:	6 J x 15
Wheel offset in mm:	38
Wheel load in kg:	580

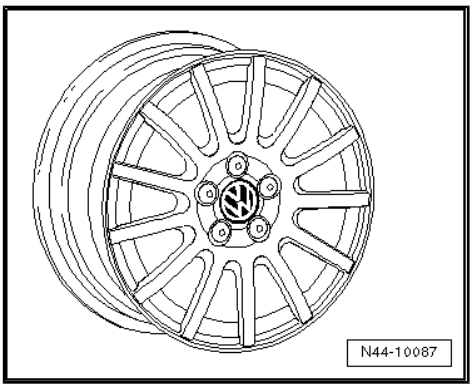

38.2.2 5 1/2 J x 16

Caution

Observe the allocation of wheels and tyres to the respective engines, which are listed in the overview table ⇒ page 318 *.*

For vehicles up to and including 96 kW and petrol engines to 110 kW

For vehicles with 110 kW TDI and petrol engines 1.8l 132 kW, 2.3l 125 kW, 2.8l 150 kW

Winter wheels

1J0 601 025 M, 1J0 601 025 AF - Wheel and tyre combination
⇒ page 318

Size:	5 1/2 J x 16
Wheel offset in mm:	36
Wheel load in kg:	550

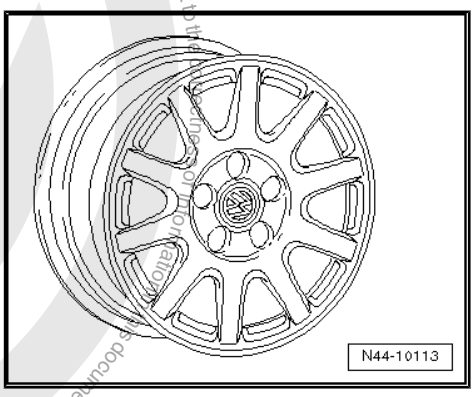

Protected by copyright. Copying for private or commercial purposes, in part or in whole, is not permitted unless authorised by Volkswagen AG. Volkswagen AG does not guarantee or accept any liability with respect to the accuracy of the document. Copyright by Volkswagen AG.
satelettronica

38.2.3 $6^1/_2$ J x 16

Caution

Observe the allocation of wheels and tyres to the respective engines, which are listed in the overview table *⇒ page 318*.

For vehicles with maximum permitted axle load of 1,000 kg

1C0 601 025 A, 1C0 601 025 D - Wheel and tyre combination ⇒ page 318

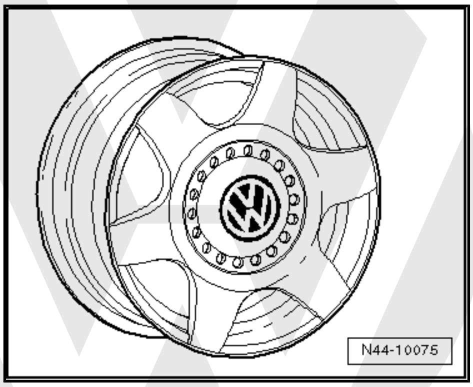

Size:	$6^1/_2$ J x 16
Wheel offset in mm:	42
Wheel load in kg:	500

For vehicles with maximum permitted axle load of 1,060 kg

1J0 601 025 F, 1J0 601 025 AC - Wheel and tyre combination ⇒ page 318

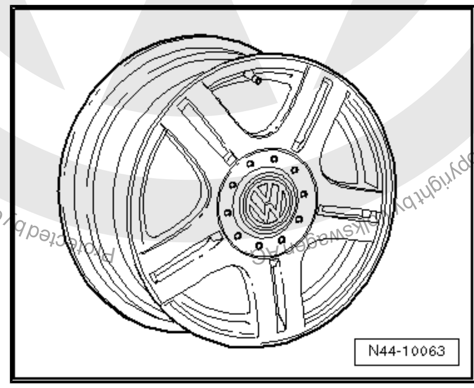

Size:	$6^1/_2$ J x 16
Wheel offset in mm:	42
Wheel load in kg:	530

1J0 601 025 E, 1J0 601 025 AD - Wheel and tyre combination ⇒ page 318

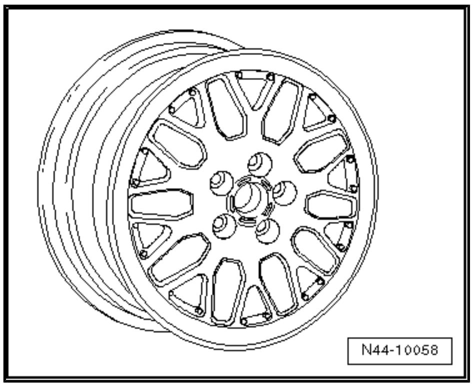

Size:	$6^1/_2$ J x 16
Wheel offset in mm:	42
Wheel load in kg:	530

satelettronica

1J0 601 025 H, 1J0 601 025 AH - Wheel and tyre combination
⇒ page 318

Size:	$6^1/_2$ J x 16
Wheel offset in mm:	42
Wheel load in kg:	530

For vehicles up to and including 96 kW and petrol engines to 110 kW

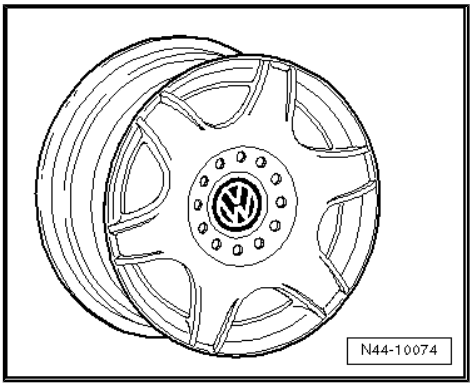

1J0 601 027 R - Wheel and tyre combination ⇒ page 318

Size:	$6^1/_2$ J x 16
Wheel offset in mm:	42
Wheel load in kg:	550

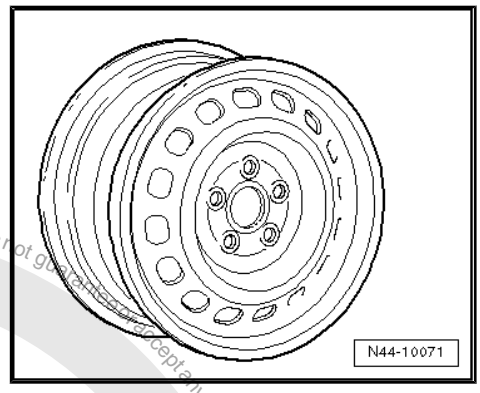

1J0 601 025 L, 1J0 601 025 AE - Wheel and tyre combination
⇒ page 318

Size:	$6^1/_2$ J x 16
Wheel offset in mm:	42
Wheel load in kg:	550

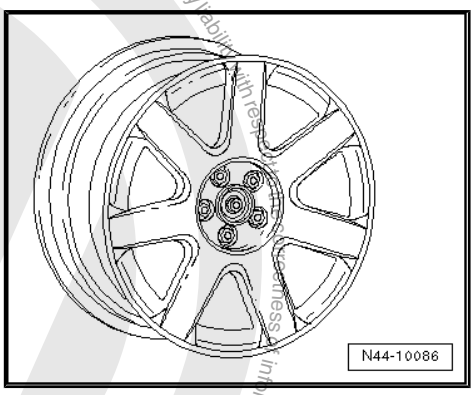

1J0 601 025 R, 1J0 601 025 AN - Wheel and tyre combination
⇒ page 318

Size:	$6^1/_2$ J x 16
Wheel offset in mm:	42
Wheel load in kg:	550

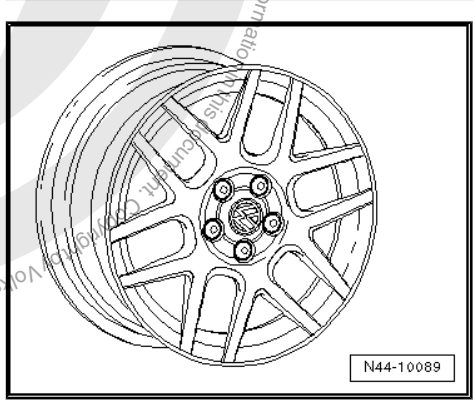

Protected by copyright. Copying for private or commercial purposes, in part or in whole, is not permitted unless authorised by Volkswagen AG. Volkswagen AG does not guarantee or accept any liability with respect to the correctness of information in this document. Copyright by Volkswagen AG.
satelettronica

1J0 601 025 T, 1J0 601 025 AJ - Wheel and tyre combination
⇒ page 318

Size:	$6^1/_2$ J x 16
Wheel offset in mm:	42
Wheel load in kg:	550

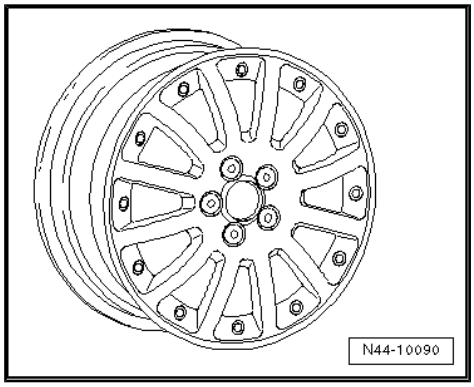

1C0 601 025 G - Wheel and tyre combination ⇒ page 318

Size:	$6^1/_2$ J x 16
Wheel offset in mm:	42
Wheel load in kg:	550

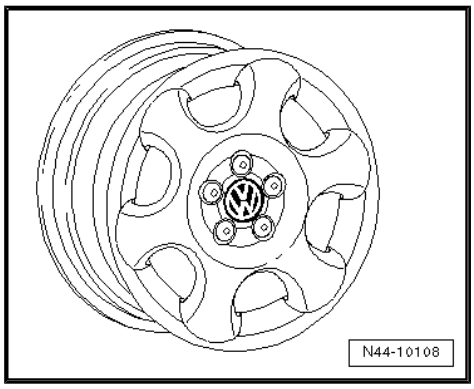

1C0 601 025 H - Wheel and tyre combination ⇒ page 318

Size:	$6^1/_2$ J x 16
Wheel offset in mm:	42
Wheel load in kg:	550

For vehicles with 110 kW TDI and petrol engines 1.8l 132 kW, 2.3l 125 kW, 2.8l 150 kW

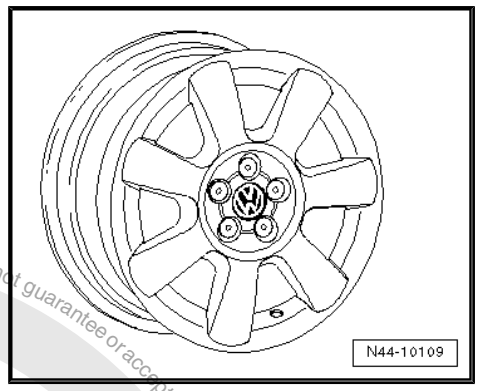

1J0 601 027 L, 1J0 601 027 R - Wheel and tyre combination
⇒ page 319

Size:	$6^1/_2$ J x 16
Wheel offset in mm:	42
Wheel load in kg:	550

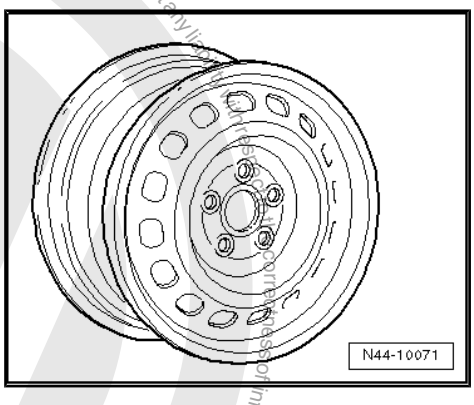

satelettronica
Protected by copyright. Copying for private or commercial purposes, in part or whole is not permitted unless authorised by Volkswagen AG. Volkswagen AG does not guarantee or accept any liability with respect to the correctness of information in this document. Copyright by Volkswagen AG.

1J0 601 025 F, 1J0 601 025 AC - Wheel and tyre combination
⇒ page 319

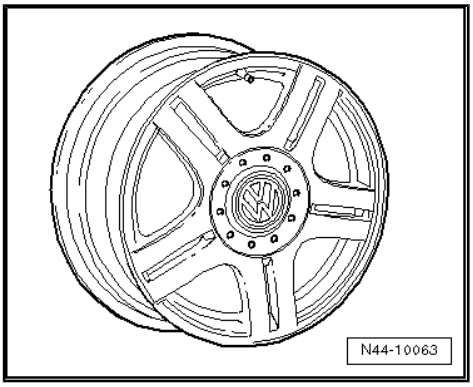

Note

This rim is allowed only for vehicles with a maximum permitted axle load of 1060 kg.

Size:	$6^1/_2$ J x 16
Wheel offset in mm:	42
Wheel load in kg:	530

1J0 601 025 L - Wheel and tyre combination ⇒ page 319

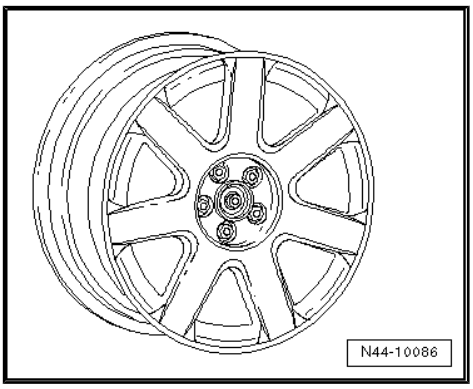

Size:	$6^1/_2$ J x 16
Wheel offset in mm:	42
Wheel load in kg:	550

1J0 601 025 AN, 1J0 601 025 R - Wheel and tyre combination
⇒ page 319

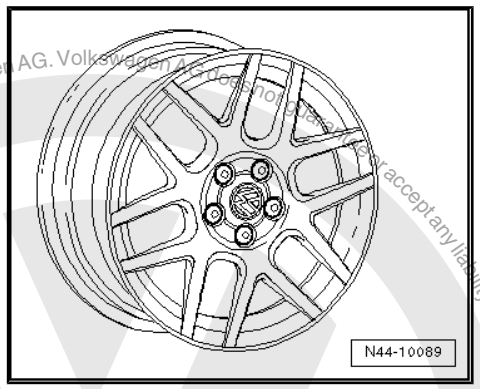

Size:	$6^1/_2$ J x 16
Wheel offset in mm:	42
Wheel load in kg:	550

1J0 601 025 T, 1J0 601 025 AJ - Wheel and tyre combination
⇒ page 319

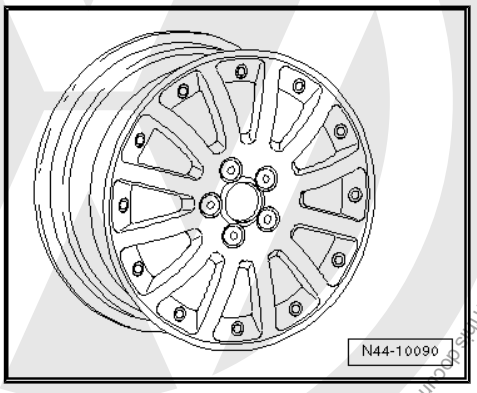

Size:	$6^1/_2$ J x 16
Wheel offset in mm:	42
Wheel load in kg:	550

Protected by copyright. Copying for private or commercial purposes, in part or in whole, is not permitted unless authorised by Volkswagen AG. Volkswagen AG does not guarantee or accept any liability with respect to the correctness of information in this document. Copyright by Volkswagen AG.
satelettronica

1C0 601 025 G - Wheel and tyre combination ⇒ page 319

Size:	$6^1/_2$ J x 16
Wheel offset in mm:	42
Wheel load in kg:	550

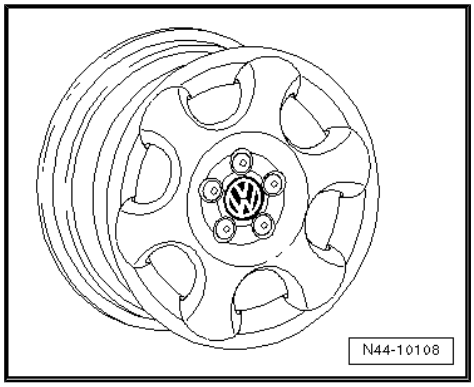

1C0 601 025 H - Wheel and tyre combination ⇒ page 319

Size:	$6^1/_2$ J x 16
Wheel offset in mm:	42
Wheel load in kg:	550

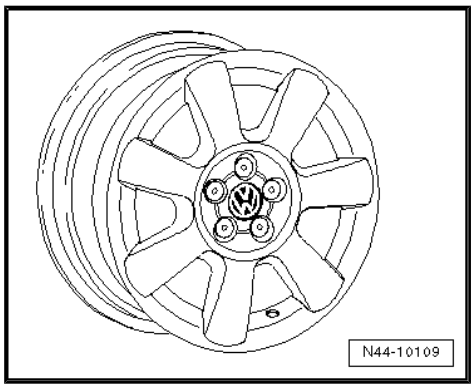

38.2.4 7 J x 17

The following wheels are permitted only if the stated conditions ⇒ page 331 **are fulfilled.**

> ⚠ **Caution**
>
> ***Observe the allocation of wheels and tyres to the respective engines, which are listed in the overview table*** ⇒ page 318 ***.***

1J0 601 025 J, 1J0 601 025 S - Wheel and tyre combination ⇒ page 318

Size:	7 J x 17
Wheel offset in mm:	38
Wheel load in kg:	580

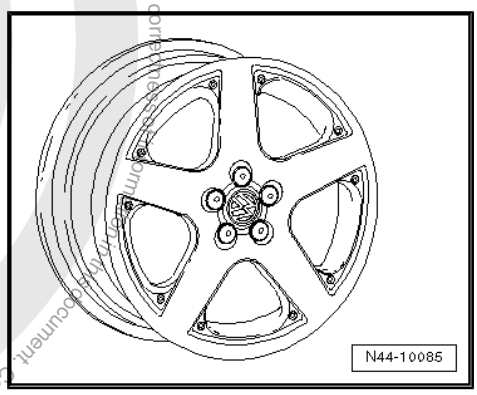

Protected by copyright. Copying for private or commercial purposes, in part or in whole, is not permitted unless authorised by Volkswagen AG. Volkswagen AG does not guarantee or accept any liability with respect to the correctness of information in this document. Copyright by Volkswagen AG.
satelettronica

Protected by copyright. Copying for private or commercial purposes, in part or in whole, is not permitted unless authorised by Volkswagen AG. Volkswagen AG does not guarantee or accept any liability with respect to the correctness of information in this document. Copyright by Volkswagen AG.

1J0 601 025 AB - Wheel and tyre combination ⇒ page 318

Size:	7 J x 17
Wheel offset in mm:	38
Wheel load in kg:	550

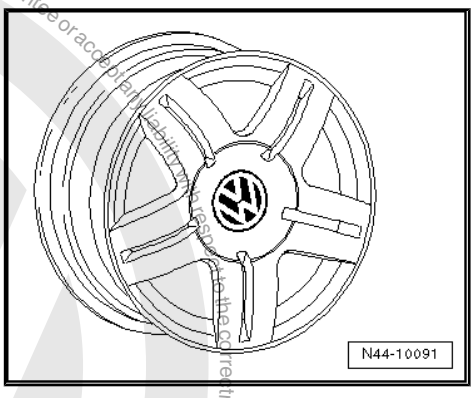

1C0 601 025 B, 1C0 601 025 E - Wheel and tyre combination ⇒ page 318

Size:	7 J x 17
Wheel offset in mm:	38
Wheel load in kg:	550

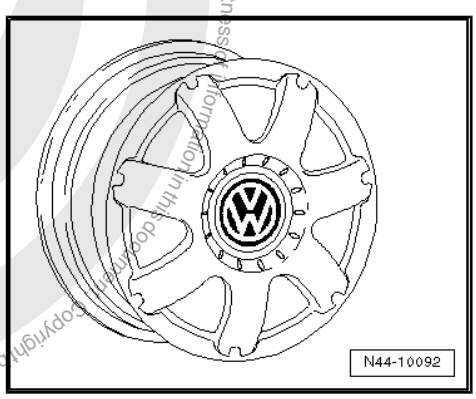

1C0 601 025 J - Wheel and tyre combination ⇒ page 318

Size:	7 J x 17
Wheel offset in mm:	38
Wheel load in kg:	550

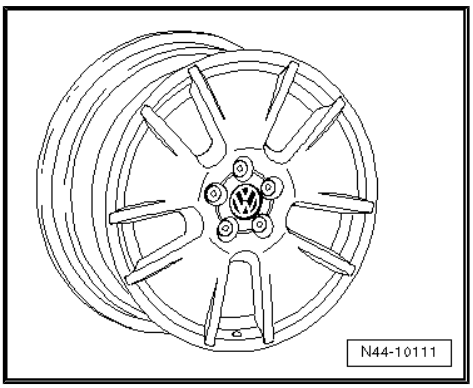

1C0 601 025 K, 1C0 601 025 Q - Wheel and tyre combination ⇒ page 318

Alloy disc-type wheels with exchangeable trim elements ⇒ page 60

Size:	7 J x 17
Wheel offset in mm:	38
Wheel load in kg:	550

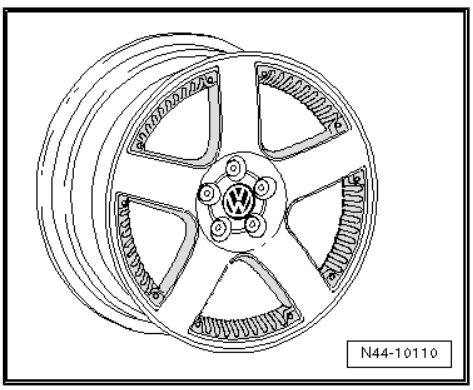

satelettronica

1J0 601 025 BE - Wheel and tyre combination ⇒ page 318

Size:	7 J x 17
Wheel offset in mm:	38
Wheel load in kg:	550

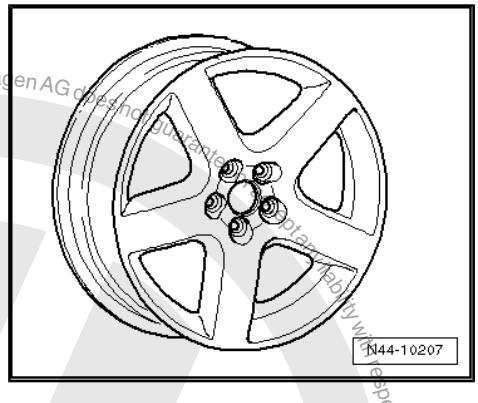

1J0 601 025 AS - Wheel and tyre combination ⇒ page 318

Size:	7 J x 17
Wheel offset in mm:	38
Wheel load in kg:	550

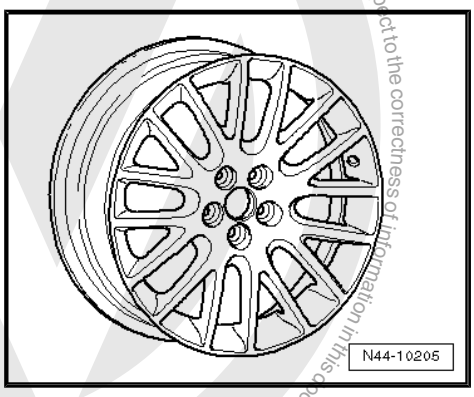

1C0 601 025 M - Wheel and tyre combination ⇒ page 318

Size:	7 J x 17
Wheel offset in mm:	38
Wheel load in kg:	550

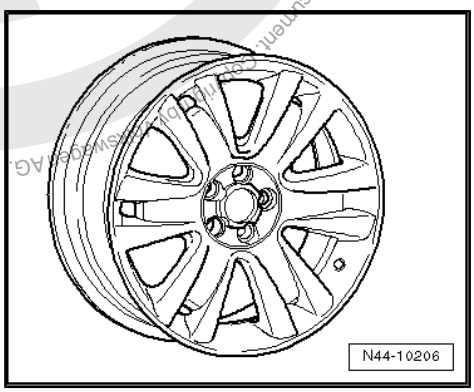

38.2.5 7 1/2 J x 17

The following wheels are permitted only if the stated conditions ⇒ page 331 **are fulfilled.**

> ⚠ **Caution**
>
> *Observe the allocation of wheels and tyres to the respective engines, which are listed in the overview table* ⇒ page 318 *.*

Volkswagen AG. Volkswagen AG does not guarantee or assume any liability with respect to the correctness of information in this document. Copyright by Volkswagen AG. Protected by copyright. Copying for private or commercial purposes, in part or in whole, is not permitted unless authorised by Volkswagen AG.
satelettronica

1J0 601 025 BF - Wheel and tyre combination ⇒ page 318

Size:	$7^1/_2$ J x 17
Wheel offset in mm:	38
Wheel load in kg:	550

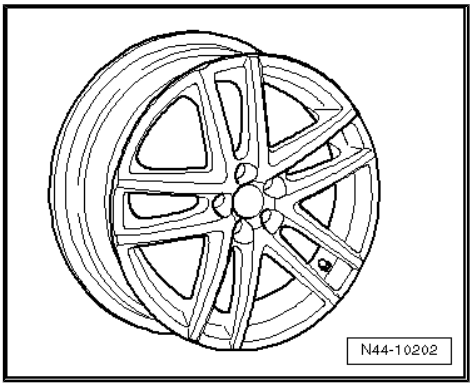

1J0 601 025 BH - Wheel and tyre combination ⇒ page 318

Size:	$7^1/_2$ J x 17
Wheel offset in mm:	38
Wheel load in kg:	560

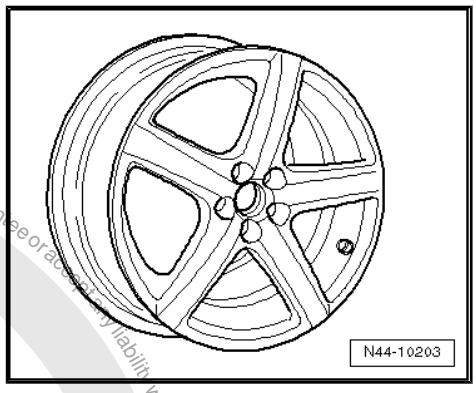

38.3 Conditions for fitting 17" wheels and tyres

17" wheels with 225/45 R 17 tyres are possible only:

1. For vehicles from model year 2001.

2. If 17" sports running gear and a steering box with reduced steering arm travel is installed in the vehicle

Allocation of steering box PR No. to engine:	
PR No. of steering box	**Engine**
QZ 3[9)]	1.8l; 2.0l; 2.3l petrol engines; 1.9l diesel engines
QZ 4[9)]	Up to and including 1.6l petrol engines
QZ 5[9)]	VR6 (US version); VR6 4Motion

9) Replacement part numbers ⇒ Electronic parts catalogue "ETKA"

3. If tyres with a maximum width of 218 mm are used:

4. If snow chains are not used.

Maximum width of 17" tyres

If a vehicle is retrofitted with 17" tyres or if existing 17" tyres are renewed, use only tyres with a maximum width -a- which does not exceed 218 mm during use [10)].

10) The measured width of the tyre including lettering on 7 J x 17 or $7^1/_2$ J x 17 and at the specified tyre pressure.

If wider tyres are used, under certain circumstances, the tyres may contact the front axle and the bodywork while the car is being driven.

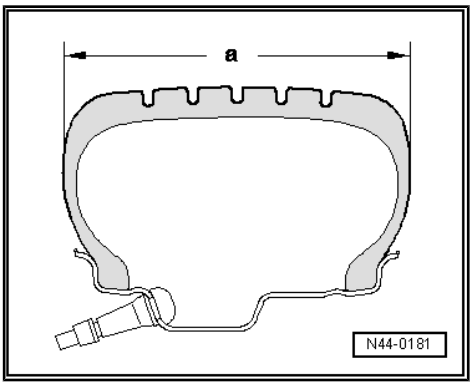

Copyright by Volkswagen AG. Volkswagen AG does not guarantee or accept any liability with respect to the correctness of information in this document. Copying or printing in whole or in part is not permitted unless authorised by Volkswagen AG. Copyright by Volkswagen AG.
satelettronica

39 Golf Variant model year 2007 to model year 2010

General

Volkswagen vehicles are built according to the latest findings in safety engineering. To keep it that way, we recommend the use of only genuine Volkswagen spare parts. You can recognise this by the VW Audi logo and by the part number. It has been established that these parts are reliable, safe and suitable.

Despite constant appraisal of the market, we cannot assess other products on these points, even when in isolated cases they have been passed by official inspectors or have been granted official approval. Therefore, we cannot, of course, assume any liability if these products are installed.

> ⚠ **WARNING**
>
> *The products from Volkswagen genuine parts and Votex genuine accessories may differ in fitting requirements, torque specifications and so on.*
>
> *Always follow the respective fitting and operating instructions.*

The wheel and tyre combinations or changes listed in the vehicle tables refer exclusively to Volkswagen Genuine wheels. Approval of wheel and tyre combinations or a change to wheels from the accessories trade is not possible with the parts certificate attached here.

> ⚠ **WARNING**
>
> *The fitting instructions and torque specifications for wheels from Votex genuine accessories may differ from those intended for wheels from Volkswagen genuine parts.*
>
> *Therefore, always observe the torque settings for the wheel bolts as well as the respective fitting and operating instructions.*

39.1 Golf Variant, Golf Variant 4Motion; type 1KM model year 2007 to model year 2008

Appendix for parts certificate 3878/08

The parts certificate can be found on the Volkswagen ServiceNet under Accessories/Tyres, Wheels and Tyres, Wheels and Tyres Guide.

Type Approval No.: e1*2001/116*0328*07 to e1*2001/116*0328*11

Overview

Model engine output	Tyres	Tyre size	Wheel rim	Off-set in mm	Snow chains	Remarks
1.6l 75 kW; 1.4l 59 kW petrol engine	Standard tyres	195/65 R 15 91T	6 J x 15 ⇒ page 338	47	Yes	General information on: ◆ Winter tyres ⇒ page 15 ◆ Snow chains ⇒ page 18

Protected by copyright. Copying for private or commercial purposes, in part or in whole, is not permitted unless authorised by Volkswagen AG. Volkswagen AG does not guarantee or accept any liability with respect to the correctness of information in this document. Copyright by Volkswagen AG.

satelettronica

Model engine output	Tyres	Tyre size	Wheel rim	Off-set in mm	Snow chains	Remarks
1.9l 77 kW TDI diesel engine with automatic gearbox	Modification	195/65 R 15 91H/V	6 J x 15 ⇒ page 338	47	Yes	Tyre makes recommended by Volkswagen: ◆ Summer tyres ⇒ page 652 ◆ All-season tyres ⇒ page 671 ◆ Winter tyres ⇒ page 687
		195/65 R 15 91T/H/V	6 1/2 J x 15 ⇒ page 339	50	Yes	
		205/60 R 15 91T/H/V	6 J x 15 ⇒ page 338	47	Yes	
		205/55 R 16 91T/H/V	6 1/2 J x 16 ⇒ page 341	50	No	
		225/45 R 17 91T/H/V	7 J x 17 ⇒ page 345	54	No	
		225/40 R 18 92Y* ⇒ page 333	7 1/2 J x 18 ⇒ page 347	51	No	* 225/40 R 18 92Y tyres on 7 1/2 J x 18 rims with an offset of 51 are permitted only on vehicles with sports running gear and rear axle camber of -1°45'! ⇒ page 347
	Winter tyres	195/65 R 15 91Q/T/H	6 J x 15 ⇒ page 338	47	Yes	
		205/55 R 16 91Q/T/H	6 J x 16 ⇒ page 340	50	Yes	
1.4l 90 kW petrol engine	Standard tyres	195/65 R 15 91H	6 J x 15 ⇒ page 338	47	Yes	
1.9l 77 kW TDI diesel engine with manual gearbox and front-wheel drive	Modification	195/65 R 15 91V	6 J x 15 ⇒ page 338	47	Yes	
2.0l 100 kW TDI; 2.0l 103 kW TDI; Diesel engines		195/65 R 15 91H/V	6 1/2 J x 15 ⇒ page 339	50	Yes	
		205/60 R 15 91H/V	6 J x 15 ⇒ page 338	47	Yes	
		205/55 R 16 91H/V/W	6 1/2 J x 16 ⇒ page 341	50	No	
		225/45 R 17 91H/V/W	7 J x 17 ⇒ page 345	54	No	

Protected by copyright. Copying for private or commercial purposes, in part or in whole, is not permitted unless authorised by Volkswagen AG. Volkswagen AG does not guarantee or accept any liability with respect to the correctness of information in this document. Copyright by Volkswagen AG.
satelettronica

Model engine output	Tyres	Tyre size	Wheel rim	Off-set in mm	Snow chains	Remarks
		225/40 R 18 92Y* ⇒ page 333	$7^1/_2$ J x 18 ⇒ page 347	51	No	
	Winter tyres	195/65 R 15 91Q/T/H	6 J x 15 ⇒ page 338	47	Yes	
		205/55 R 16 91Q/T/H	6 J x 16 ⇒ page 340	50	Yes	
1.9l 77 kW TDI diesel engine with manual gearbox and 4Motion	Standard tyres	205/55 R 16 91T/H/V	$6^1/_2$ J x 16 ⇒ page 341	50	No	
	Modification	225/45 R 17 91T/H/V	7 J x 17 ⇒ page 345	54	No	
		225/40 R 18 92Y* ⇒ page 333	$7^1/_2$ J x 18 ⇒ page 347	51	No	
	Winter tyres	205/55 R 16 91Q/T/H	6 J x 16 ⇒ page 340	50	Yes	
1.4l 103 kW; petrol engine	Standard tyres	205/55 R 16 91V	$6^1/_2$ J x 16 ⇒ page 341	50	No	
	Modification	195/65 R 15 91V	6 J x 15 ⇒ page 338	47	Yes	
		195/65 R 15 91V	$6^1/_2$ J x 15 ⇒ page 339	50	Yes	
		205/60 R 15 91V	6 J x 15 ⇒ page 338	47	Yes	
		205/55 R 16 91V/W	$6^1/_2$ J x 16 ⇒ page 341	50	No	
		225/45 R 17 91V/W	7 J x 17 ⇒ page 345	54	No	
		225/40 R 18 92Y* ⇒ page 333	$7^1/_2$ J x 18 ⇒ page 347	51	No	
	Winter tyres	195/65 R 15 91Q/T/H	6 J x 15 ⇒ page 338	47	Yes	
		205/55 R 16 91Q/T/H	6 J x 16 ⇒ page 340	50	Yes	
1.4l 125 kW; petrol engine	Standard tyres	205/55 R 16 91V	$6^1/_2$ J x 16 ⇒ page 341	50	No	

Protected by copyright. Copying for private or commercial purposes, in part or in whole, is not permitted unless authorised by Volkswagen AG. Volkswagen AG does not guarantee or accept any liability with respect to the correctness of information in this document. Copyright by Volkswagen AG.

satelettronica

Model engine output	Tyres	Tyre size	Wheel rim	Off-set in mm	Snow chains	Remarks
	Modification	225/45 R 17 91V/W	7 J x 17 ⇒ page 345	54	No	
		225/40 R 18 92Y* ⇒ page 333	7 1/2 J x 18 ⇒ page 347	51	No	
	Winter tyres	205/55 R 16 91Q/T/H	6 J x 16 ⇒ page 340	50	Yes	
2.0l 147 kW; petrol engine	Standard tyres	205/55 R 16 91W	6 1/2 J x 16 ⇒ page 341	50	No	
	Modification	225/45 R 17 91W	7 J x 17 ⇒ page 345	54	No	
		225/40 R 18 92Y* ⇒ page 333	7 1/2 J x 18 ⇒ page 347	51	No	
	Winter tyres	205/55 R 16 91Q/T/H	6 J x 16 ⇒ page 340	50	Yes	

Tyre inflation pressures are located on a sticker in the fuel tank flap or in ⇒ Maintenance ; Booklet ; Check tyres: condition, profile, inflation pressure, depth of tread .

39.2 Golf Variant, Golf Variant 4Motion; type 1KM model year 2009 to model year 2010

Appendix for parts certificate 3878/08

The parts certificate can be found on the Volkswagen ServiceNet under Accessories/Tyres, Wheels and Tyres, Wheels and Tyres Guide.

Type Approval No.: e1*2001/116*0328*12 to e1*2001/116*0328*14

Overview

Model engine output	Tyres	Tyre size	Wheel rim	Off-set in mm	Snow chains	Remarks
1.6l 75 kW; 1.4l 59 kW petrol engine	Standard tyres	195/65 R 15 91T	6 J x 15 ⇒ page 338	47	Yes	General information on: ◆ Winter tyres ⇒ page 15 ◆ Snow chains ⇒ page 18
1.9l 77 kW TDI diesel engine with front-wheel drive	Modification	195/65 R 15 91H/V	6 J x 15 ⇒ page 338	47	Yes	Tyre makes recommended by Volkswagen:

Protected by copyright. Copying for private or commercial purposes, in part or in whole, is not permitted unless authorised by Volkswagen AG. Volkswagen AG does not guarantee or accept any liability with respect to the correctness of information in this document. Copyright by Volkswagen AG.

satelettronica

Model engine output	Tyres	Tyre size	Wheel rim	Off-set in mm	Snow chains	Remarks
		195/65 R 15 91T/H/V	$6^1/_2$ J x 15 ⇒ page 339	50	Yes	◆ Summer tyres ⇒ page 652 ◆ All-season tyres ⇒ page 671 ◆ Winter tyres ⇒ page 687
		205/60 R 15 91T/H/V	6 J x 15 ⇒ page 338	47	Yes	
		205/55 R 16 91T/H/V	$6^1/_2$ J x 16 ⇒ page 341	50	No	
		225/45 R 17 91T/H/V	7 J x 17 ⇒ page 345	54	No	
		225/40 R 18 92Y* ⇒ page 336	$7^1/_2$ J x 18 ⇒ page 347	51	No	* 225/40 R 18 92Y tyres on $7^1/_2$ J x 18 rims with an offset of 51 are permitted only on vehicles with sports running gear and rear axle camber of -1°45'! ⇒ page 347
	Winter tyres	195/65 R 15 91Q/T/H	6 J x 15 ⇒ page 338	47	Yes	
		205/55 R 16 91Q/T/H	6 J x 16 ⇒ page 340	50	Yes	
1.9l 77 kW TDI diesel engine with manual gearbox and 4Motion	Standard tyres	205/55 R 16 91T/H/V	$6^1/_2$ J x 16 ⇒ page 341	50	No	
	Modification	225/45 R 17 91T/H/V	7 J x 17 ⇒ page 345	54	No	
		225/40 R 18 92Y* ⇒ page 336	$7^1/_2$ J x 18 ⇒ page 347	51	No	
	Winter tyres	205/55 R 16 91Q/T/H	6 J x 16 ⇒ page 340	50	Yes	
1.4l 90 kW petrol engine	Standard tyres	195/65 R 15 91H	6 J x 15 ⇒ page 338	47	Yes	
	Modification	195/65 R 15 91V	6 J x 15 ⇒ page 338	47	Yes	
		195/65 R 15 91H/V	$6^1/_2$ J x 15 ⇒ page 339	50	Yes	
		205/60 R 15 91H/V	6 J x 15 ⇒ page 338	47	Yes	

Protected by copyright. Copyright by Volkswagen AG. Copyright by Volkswagen AG. Volkswagen AG does not guarantee or accept any liability with respect to the correctness of information in this document. Copyright by Volkswagen AG. Reproduction for commercial purposes, in whole or in part, is not permitted unless authorised by Volkswagen AG.
satelettronica

Model engine output	Tyres	Tyre size	Wheel rim	Off-set in mm	Snow chains	Remarks
		205/55 R 16 91H/V/W	$6^1/_2$ J x 16 ⇒ page 341	50	No	
		225/45 R 17 91H/V/W	7 J x 17 ⇒ page 345	54	No	
		225/40 R 18 92Y* ⇒ page 336	$7^1/_2$ J x 18 ⇒ page 347	51	No	
	Winter tyres	195/65 R 15 91Q/T/H	6 J x 15 ⇒ page 338	47	Yes	
		205/55 R 16 91Q/T/H	6 J x 16 ⇒ page 340	50	Yes	
2.0l 100 kW TDI; 2.0l 103 kW TDI; Diesel engines	Standard tyres	205/55 R 16 91H/V/W	$6^1/_2$ J x 16 ⇒ page 341	50	No	As of model year 2009: models with a 2.0l 100/103 kW TDI engine will only be equipped with a 16" brake system (PR No. 1LJ). Only wheels as of 16" are permitted!
	Modification	225/45 R 17 91H/V/W	7 J x 17 ⇒ page 345	54	No	
		225/40 R 18 92Y* ⇒ page 336	$7^1/_2$ J x 18 ⇒ page 347	51	No	
	Winter tyres	205/55 R 16 91Q/T/H	6 J x 16 ⇒ page 340	50	Yes	
1.4l 103 kW;	Standard tyres	205/55 R 16 91V	$6^1/_2$ J x 16 ⇒ page 341	50	No	As of model year 2009: models with a 1.4l 103 kW petrol engine will only be equipped with a 16" brake system (PR No. 1LJ). Only wheels as of 16" are permitted!
	Modification	205/55 R 16 91H/V/W	$6^1/_2$ J x 16 ⇒ page 341	50	No	
		225/45 R 17 91H/V/W	7 J x 17 ⇒ page 345	54	No	
		225/40 R 18 92Y* ⇒ page 336	$7^1/_2$ J x 18 ⇒ page 347	51	No	
	Winter tyres	205/55 R 16 91Q/T/H	6 J x 16 ⇒ page 340	50	Yes	
1.4l 118 kW; 1.4l 125 kW; 2.0l 147 kW petrol engine	Standard tyres	205/55 R 16 91V	$6^1/_2$ J x 16 ⇒ page 341	50	No	

Volkswagen AG does not guarantee or accept any liability with respect to the correctness of information. Copyright by Volkswagen AG. Protected by copyright. Copying for private or commercial purposes, in part or in whole, is not permitted unless authorised by Volkswagen AG.
satelettronica

Model engine output	Tyres	Tyre size	Wheel rim	Off-set in mm	Snow chains	Remarks
	Modification	225/45 R 17 91V/W	7 J x 17 ⇒ page 345	54	No	
		225/40 R 18 92Y* ⇒ page 336	$7^1/_2$ J x 18 ⇒ page 347	51	No	
	Winter tyres	205/55 R 16 91Q/T/H	6 J x 16 ⇒ page 340	50	Yes	

Tyre inflation pressures are located on a sticker in the fuel tank flap or in ⇒ Maintenance ; Booklet ; Check tyres: condition, profile, inflation pressure, depth of tread .

39.3 Wheel allocation for Golf Variant, Golf Variant 4Motion; type 1KM model year 2007 to model year 2010

Explanation of information on wheels ⇒ page 59

Torque specifications for wheel bolts ⇒ Running gear, axles, steering; Rep. gr. 44 ; Torque specifications for fitting wheels

Pitch circle diameter:	112 mm
Number of wheel bolt holes:	5

39.3.1 6 J x 15

Caution

Observe the allocation of wheels and tyres to the respective engines, which are listed in the overview table ⇒ page 332 .

1K0 601 027 C, 1K0 601 027 H - Wheel and tyre combination
⇒ page 332

Size:	6 J x 15
Wheel offset in mm:	47
Wheel load in kg:	615

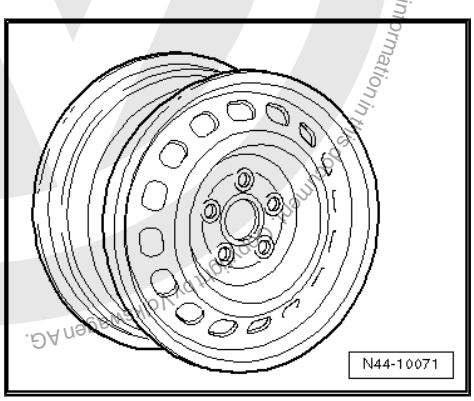

Protected by copyright. Copying for private or commercial purposes, in part or in whole, is not permitted unless authorised by Volkswagen AG. Volkswagen AG does not guarantee or accept any liability with respect to the correctness of information in this document. Copyright by Volkswagen AG.
satelettronica

1K0 601 027 T - Wheel and tyre combination ⇒ page 332

Size:	6 J x 15
Wheel offset in mm:	47
Wheel load in kg:	615

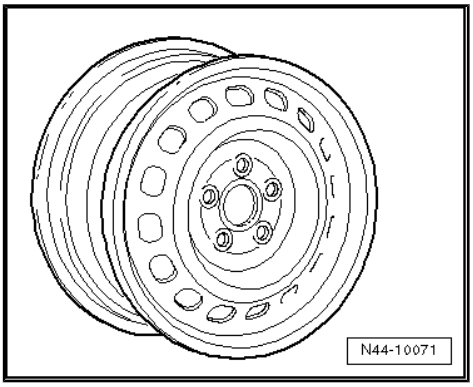

2K0 601 027 - Wheel and tyre combination ⇒ page 332

Size:	6 J x 15
Wheel offset in mm:	47
Wheel load in kg:	650

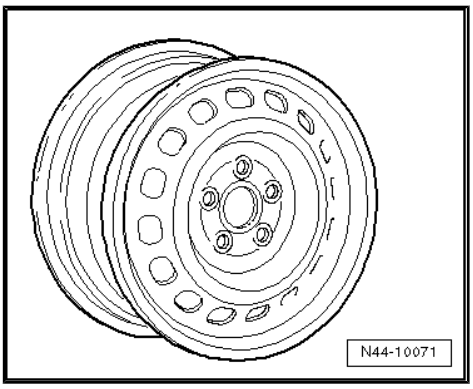

39.3.2 6 1/2 J x 15

Caution

Observe the allocation of wheels and tyres to the respective engines, which are listed in the overview table ⇒ page 332 *.*

1K0 601 025 A - Wheel and tyre combination ⇒ page 333

Size:	6 1/2 J x 15
Wheel offset in mm:	50
Wheel load in kg:	600

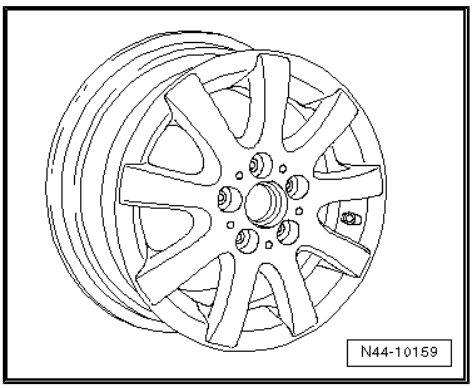

1K0 601 025 AK - Wheel and tyre combination ⇒ page 333

Size:	6 1/2 J x 15
Wheel offset in mm:	50
Wheel load in kg:	600

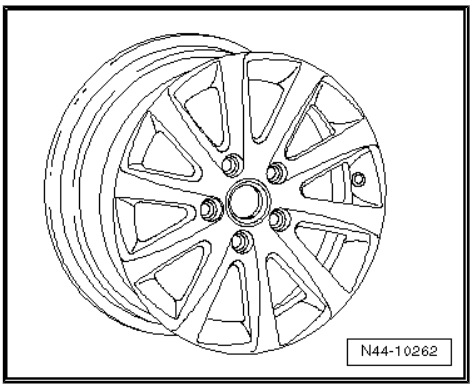

Protected by copyright. Copyright for private or commercial purposes, in part or in whole, is not permitted unless authorised by Volkswagen AG. Volkswagen AG does not guarantee or accept any liability with respect to the correctness of information in this document. Copyright by Volkswagen AG.
satelettronica

1K0 601 025 AQ - Wheel and tyre combination ⇒ page 333

Size:	$6^1/_2$ J x 15
Wheel offset in mm:	50
Wheel load in kg:	600

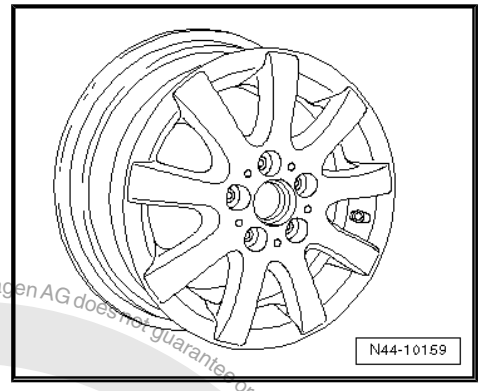

1K0 601 025 CA - Wheel and tyre combination ⇒ page 333

Size:	$6^1/_2$ J x 15
Wheel offset in mm:	50
Wheel load in kg:	600

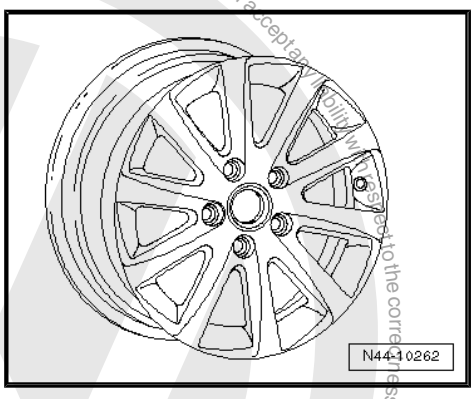

39.3.3 6 J x 16

Caution

Observe the allocation of wheels and tyres to the respective engines, which are listed in the overview table ⇒ page 332 *.*

Winter wheels

8P0 601 027 - Wheel and tyre combination ⇒ page 333

Size:	6 J x 16
Wheel offset in mm:	50
Wheel load in kg:	600

Use the following wheel bolt caps for wheel bolts:

- 1K0.601.173 (4 per wheel)
- 1K0.601.173.A (1 per wheel)

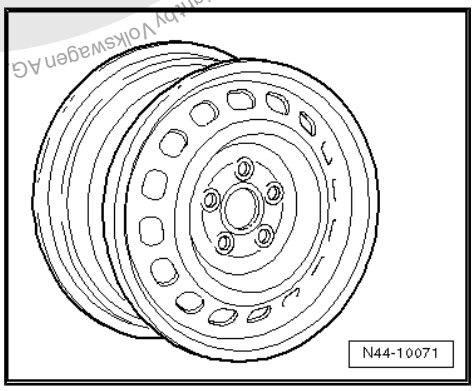

Reproduced by permitted only authorised by Volkswagen AG. Volkswagen AG does not guarantee or accept any liability with respect to the correctness of information in this document. Copyright by Volkswagen AG. Copying for private or commercial purposes, in part or in whole, is not permitted unless authorised by Volkswagen AG.
satelettronica

© Volkswagen AG, Wolfsburg. Protected by copyright. Copying for private or commercial purposes, in part or in whole, is not permitted unless authorised by Volkswagen AG. Volkswagen AG does not guarantee or accept any liability with respect to the correctness of information in this document.

1K0 601 025 Q - Wheel and tyre combination ⇒ page 333

Size:	6 J x 16 EH2 ⇒ page 59
Wheel offset in mm:	50
Wheel load in kg:	615

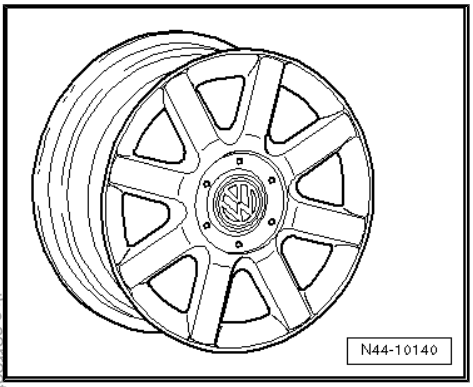

39.3.4 6 1/2 J x 16

Caution

Observe the allocation of wheels and tyres to the respective engines, which are listed in the overview table ⇒ page 332 *.*

1K0 601 027 A - Wheel and tyre combination ⇒ page 333

Size:	6 1/2 J x 16
Wheel offset in mm:	50
Wheel load in kg:	615

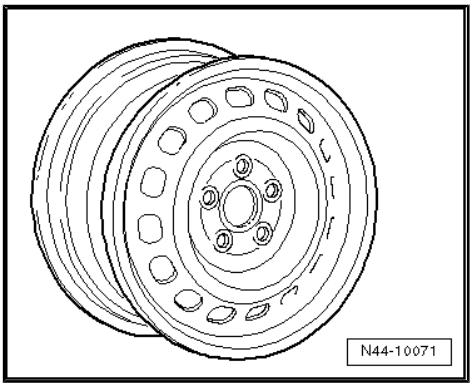

1K0 601 027 J, 1K0 601 027 K - Wheel and tyre combination ⇒ page 333

Size:	6 1/2 J x 16
Wheel offset in mm:	50
Wheel load in kg:	615

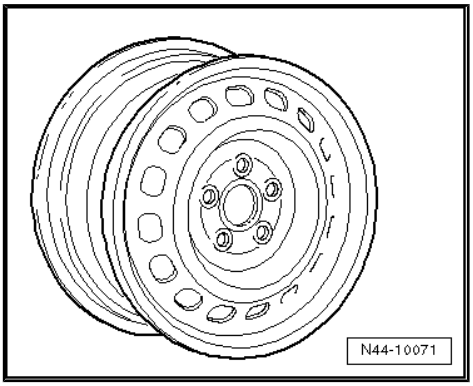

1K0 601 025 AJ - Wheel and tyre combination ⇒ page 333

Size:	6 1/2 J x 16
Wheel offset in mm:	50
Wheel load in kg:	615

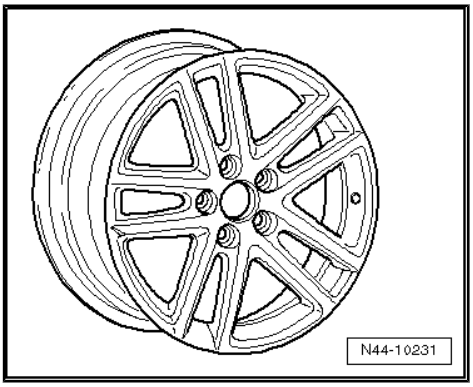

satelettronica

1K0 601 025 BC - Wheel and tyre combination ⇒ page 333

Size:	$6^1/_2$ J x 16
Wheel offset in mm:	50
Wheel load in kg:	615

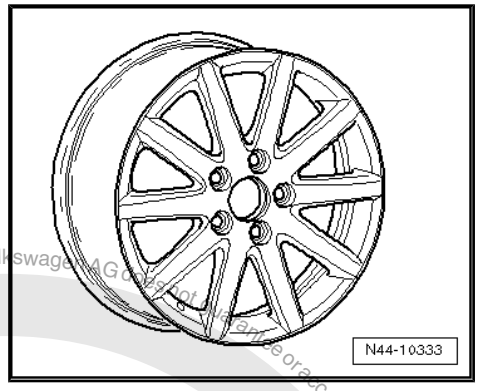

1K0 601 025 BM - Wheel and tyre combination ⇒ page 333

Size:	$6^1/_2$ J x 16
Wheel offset in mm:	50
Wheel load in kg:	615

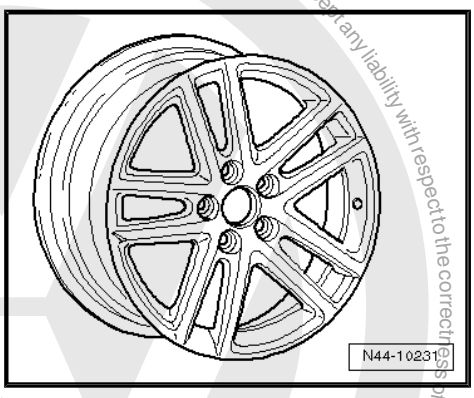

1K0 601 025 BR - Wheel and tyre combination ⇒ page 333

Size:	$6^1/_2$ J x 16
Wheel offset in mm:	50
Wheel load in kg:	615

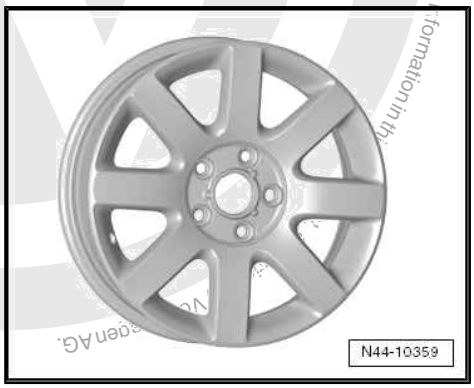

1K0 601 025 BS - Wheel and tyre combination ⇒ page 333

Size:	$6^1/_2$ J x 16
Wheel offset in mm:	50
Wheel load in kg:	615

Protected by copyright. Copying for private or commercial purposes, in part or in whole, is not permitted unless authorised by Volkswagen AG. Volkswagen AG does not guarantee or accept any liability with respect to the correctness of information in this
satelettronica

1K0 601 025 CB - Wheel and tyre combination ⇒ page 333

Size:	$6^1/_2$ J x 16
Wheel offset in mm:	50
Wheel load in kg:	615

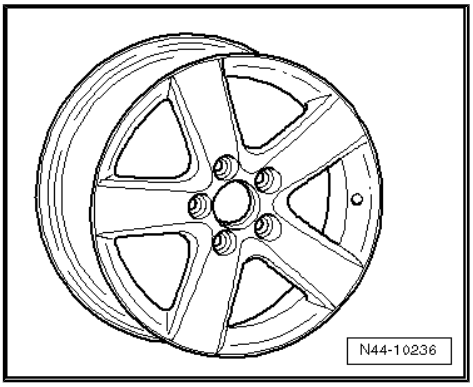

1K0 601 025 CG - Wheel and tyre combination ⇒ page 333

Size:	$6^1/_2$ J x 16
Wheel offset in mm:	50
Wheel load in kg:	615

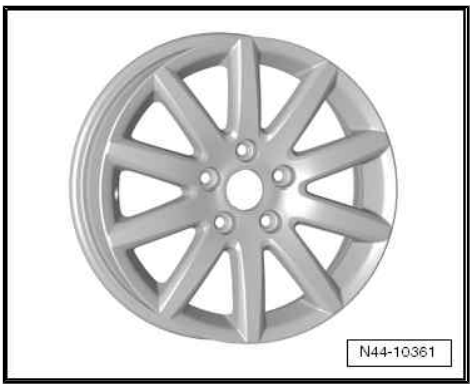

1T0 601 025 C - Wheel and tyre combination ⇒ page 333

Size:	$6^1/_2$ J x 16
Wheel offset in mm:	50
Wheel load in kg:	615

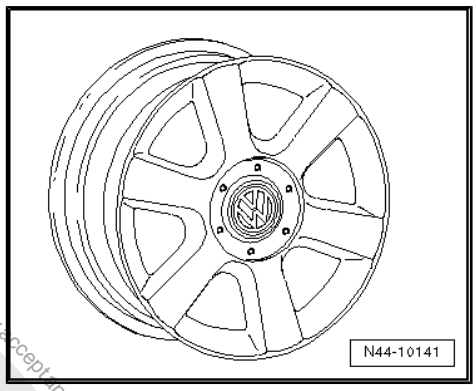

1K0 601 025 F - Wheel and tyre combination ⇒ page 333

Size:	$6^1/_2$ J x 16
Wheel offset in mm:	50
Wheel load in kg:	615

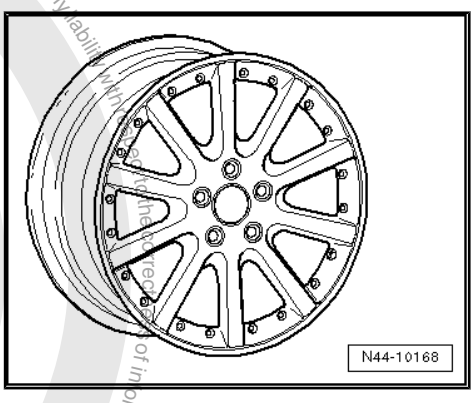

Protected by copyright. Copying for private or commercial purposes, in part or in whole is not permitted unless authorised by Volkswagen AG. Volkswagen AG does not guarantee or accept any liability with respect to the correctness of information in this document. Copyright by Volkswagen AG.
satelettronica

1K0 601 025 P - Wheel and tyre combination ⇒ page 333

Size:	$6^1/_2$ J x 16
Wheel offset in mm:	50
Wheel load in kg:	615

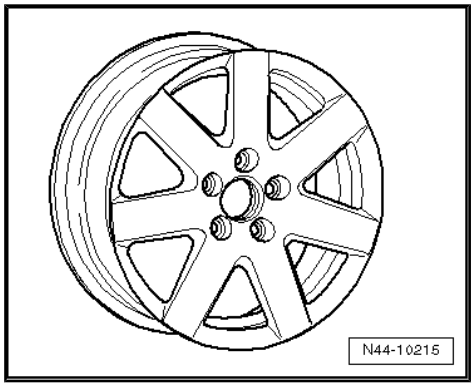

1K0 601 025 R - Wheel and tyre combination ⇒ page 333

Size:	$6^1/_2$ J x 16
Wheel offset in mm:	50
Wheel load in kg:	615

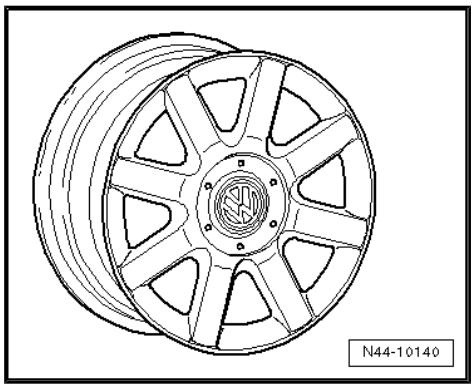

1T0 601 025 G, 1T0 601 025 K - Wheel and tyre combination ⇒ page 333

Size:	$6^1/_2$ J x 16
Wheel offset in mm:	50
Wheel load in kg:	615

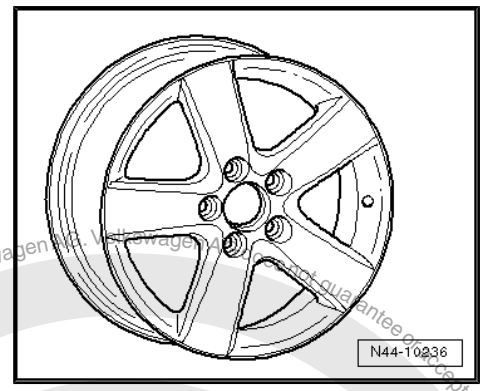

1T0 601 025 M - Wheel and tyre combination ⇒ page 333

Size:	$6^1/_2$ J x 16
Wheel offset in mm:	50
Wheel load in kg:	615

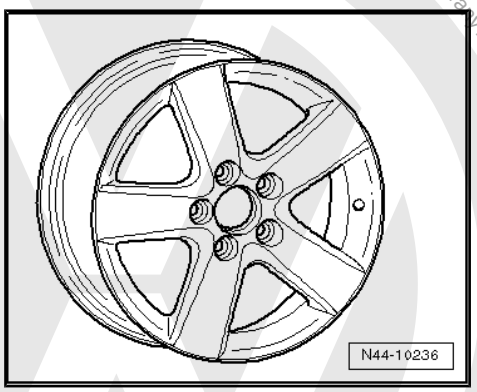

Protected by copyright. Copying for private or commercial purposes, in part or in whole, is not permitted unless authorised by Volkswagen AG. Volkswagen AG does not guarantee or accept any liability with respect to the correctness of information in this document. Copyright by Volkswagen AG.
satelettronica

1T0 601 025 R - Wheel and tyre combination ⇒ page 333

Size:	$6^1/_2$ J x 16
Wheel offset in mm:	50
Wheel load in kg:	615

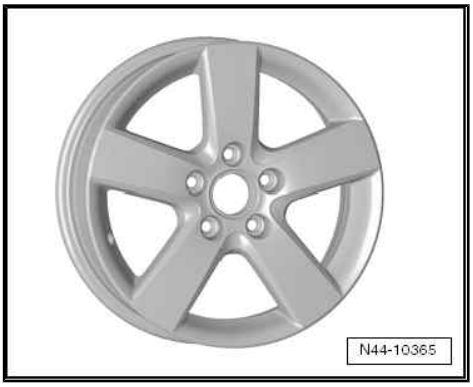

39.3.5 7 J x 17

Caution

Observe the allocation of wheels and tyres to the respective engines, which are listed in the overview table ⇒ page 332 *.*

1K0 601 025 B - Wheel and tyre combination ⇒ page 333

Size:	7 J x 17
Wheel offset in mm:	54
Wheel load in kg:	615

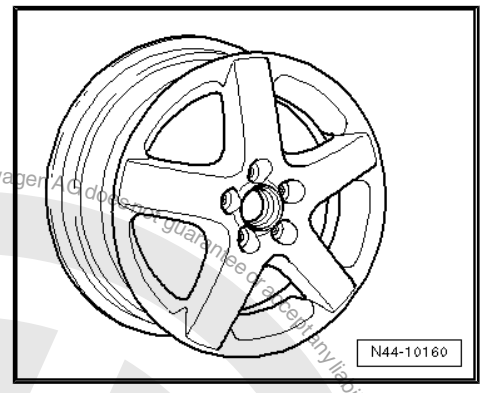

1K0 601 025 C - Wheel and tyre combination ⇒ page 333

Size:	7 J x 17
Wheel offset in mm:	54
Wheel load in kg:	615

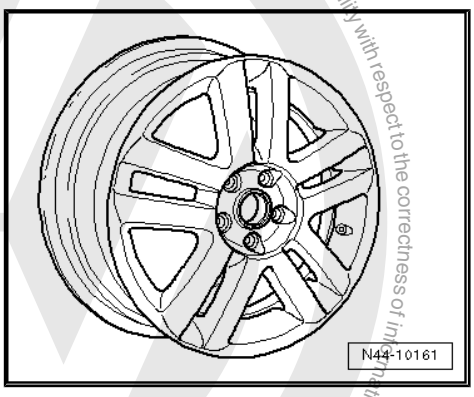

1K0 601 025 J - Wheel and tyre combination ⇒ page 333

Size:	7 J x 17
Wheel offset in mm:	54
Wheel load in kg:	615

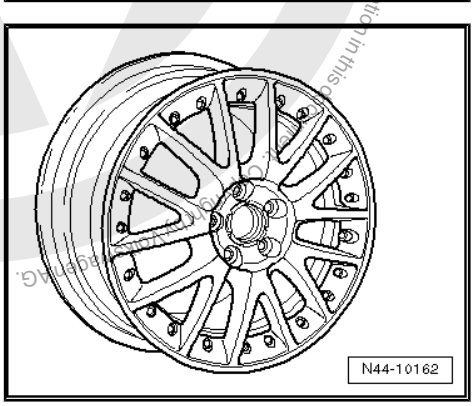

Protected by copyright. Copying for private or commercial purposes, in part or in whole, is not permitted unless authorised by Volkswagen AG. Volkswagen AG does not guarantee or accept any liability with respect to the correctness of information in this document. Copyright by Volkswagen AG.
satelettronica

1K0 601 025 K - Wheel and tyre combination ⇒ page 333

Size:	7 J x 17
Wheel offset in mm:	54
Wheel load in kg:	615

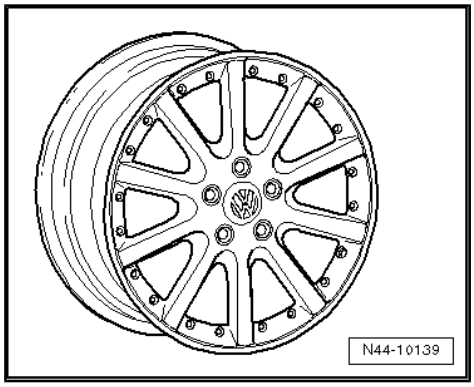

1K0 601 025 M - Wheel and tyre combination ⇒ page 333

Size:	7 J x 17
Wheel offset in mm:	54
Wheel load in kg:	615

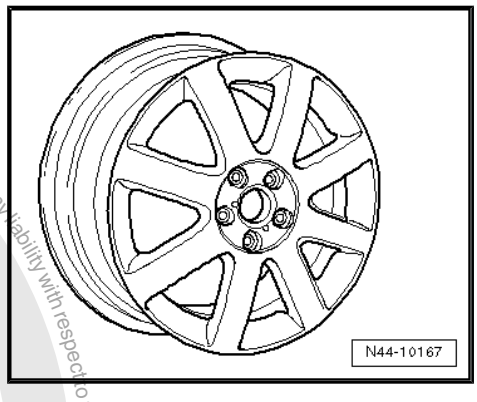

1K0 601 025 T - Wheel and tyre combination ⇒ page 333

Size:	7 J x 17
Wheel offset in mm:	54
Wheel load in kg:	615

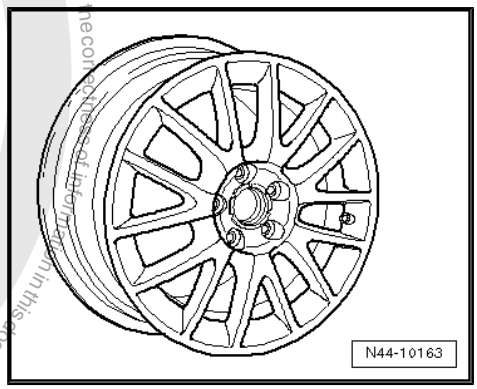

1K0 601 025 AF - Wheel and tyre combination ⇒ page 333

Size:	7 J x 17
Wheel offset in mm:	54
Wheel load in kg:	630

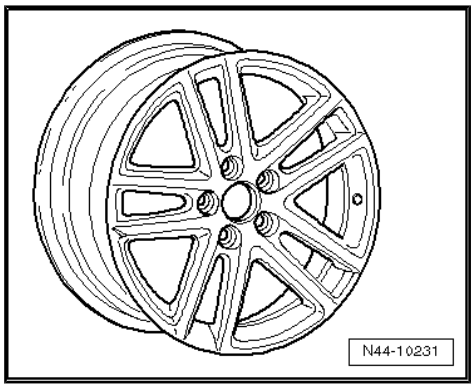

Protected by copyright. Copying for private or commercial purposes, in part or in whole, is not permitted unless authorised by Volkswagen AG. Volkswagen AG does not guarantee or accept any liability with respect to the correctness of information in this document. Copyright by Volkswagen AG.

satelettronica

Protected by copyright. Copying for private or commercial purposes, in part or in whole, is not permitted unless authorised by Volkswagen AG. Volkswagen AG does not guarantee or accept any liability with respect to the correctness of information in this document. Copyright by Volkswagen AG.

1K0 601 025 AE - Wheel and tyre combination ⇒ page 333

Size:	7 J x 17
Wheel offset in mm:	54
Wheel load in kg:	630

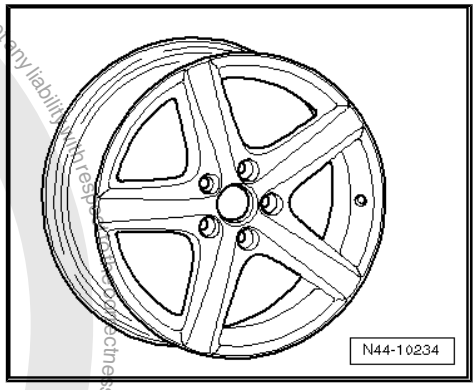

1K0 601 025 AN - Wheel and tyre combination ⇒ page 333

Size:	7 J x 17
Wheel offset in mm:	54
Wheel load in kg:	615

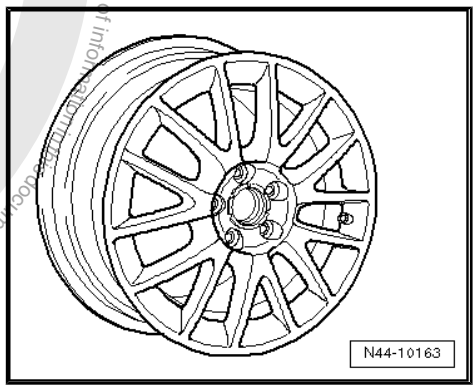

39.3.6 7 1/2 J x 18

Caution

Observe the allocation of wheels and tyres to the respective engines, which are listed in the overview table *⇒ page 332* *.*

Caution

7 1/2 J x 18 wheels can only be fitted under the following conditions:

- *Additional wheel housing extensions (FLAPS)* *⇒ page 4* *have to be fitted on the rear axle ⇒ Electronic replacement parts catalogue "ETKA" .*

1K0 601 025 AD - Wheel and tyre combination ⇒ page 333

Only for vehicles with sports running gear and rear axle camber of -1°45'

Size:	7 1/2 J x 18
Wheel offset in mm:	51
Wheel load in kg:	630

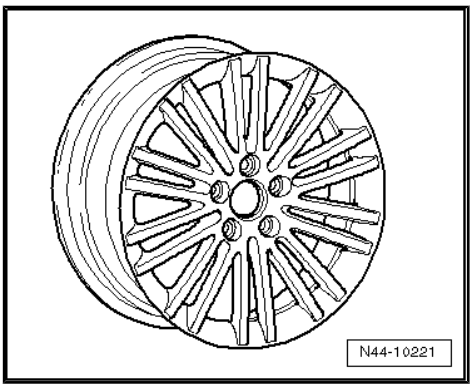

satelettronica

1K0 601 025 AG - Wheel and tyre combination ⇒ page 333

Only for vehicles with sports running gear and rear axle camber of -1°45'

Size:	$7^1/_2$ J x 18
Wheel offset in mm:	51
Wheel load in kg:	630

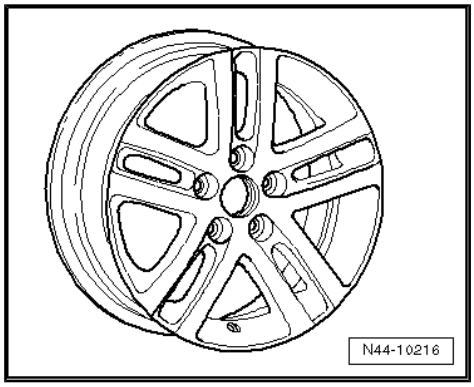

1K0 601 025 AH - Wheel and tyre combination ⇒ page 333

Only for vehicles with sports running gear and rear axle camber of -1°45'

Size:	$7^1/_2$ J x 18
Wheel offset in mm:	51
Wheel load in kg:	615

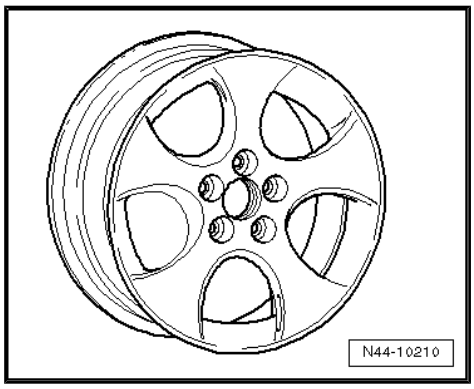

1K0 601 025 AM - Wheel and tyre combination ⇒ page 333

Only for vehicles with sports running gear and rear axle camber of -1°45'

Size:	$7^1/_2$ J x 18
Wheel offset in mm:	51
Wheel load in kg:	615

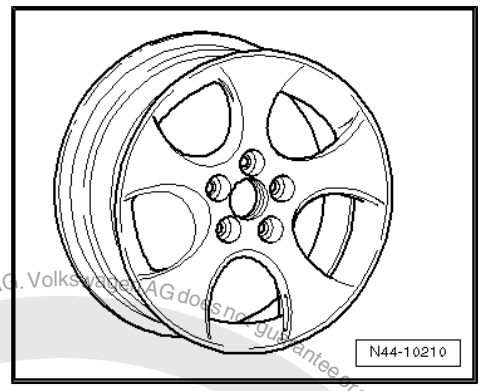

1K0 601 025 AT, 1K0 601 025 CC - Wheel and tyre combination ⇒ page 333

Only for vehicles with sports running gear and rear axle camber of -1°45'

Size:	$7^1/_2$ J x 18
Wheel offset in mm:	51
Wheel load in kg:	615

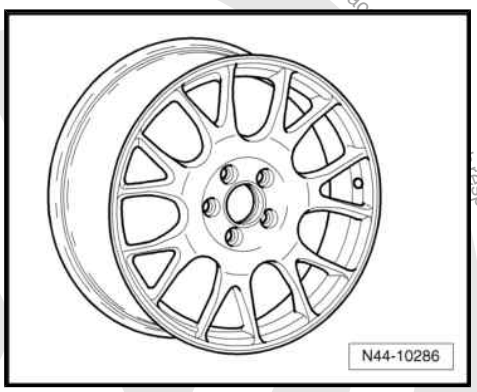

Protected by copyright. Copying for private or commercial purposes, in part or in whole, is not permitted unless authorised by Volkswagen AG. Volkswagen AG does not guarantee or accept any liability with respect to the correctness of information in this document. Copyright by Volkswagen AG.
satelettronica

1K0 601 025 BA - Wheel and tyre combination ⇒ page 333

Only for vehicles with sports running gear and rear axle camber of -1°45'

Size:	$7^1/_2$ J x 18
Wheel offset in mm:	51
Wheel load in kg:	615

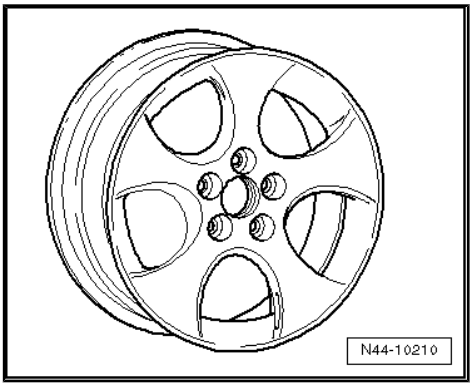

1K0 601 025 BE - Wheel and tyre combination ⇒ page 333

Only for vehicles with sports running gear and rear axle camber of -1°45'

Size:	$7^1/_2$ J x 18
Wheel offset in mm:	51
Wheel load in kg:	615

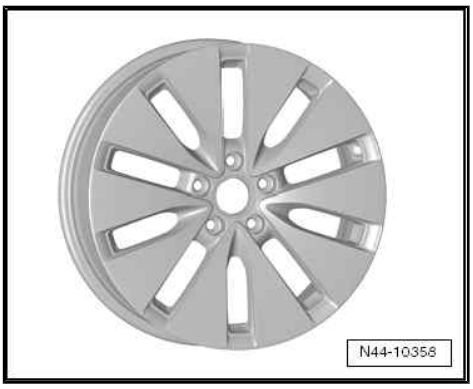

1K0 601 025 BL - Wheel and tyre combination ⇒ page 333

Only for vehicles with sports running gear and rear axle camber of -1°45'

Size:	$7^1/_2$ J x 18
Wheel offset in mm:	51
Wheel load in kg:	615

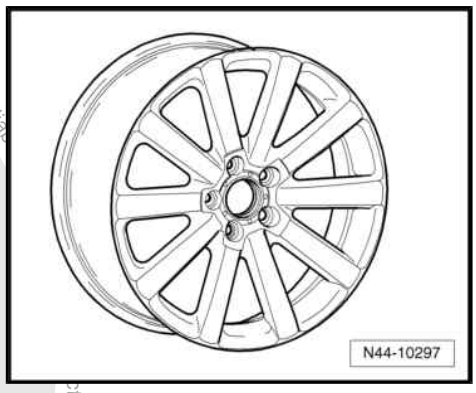

Protected by copyright. Copying for private or commercial purposes, in part or in whole, is not permitted unless authorised by Volkswagen AG. Volkswagen AG does not guarantee or accept any liability with respect to the correctness of information in this document. Copyright by Volkswagen AG.
satelettronica

Volkswagen AG does not guarantee or accept any liability with respect to the correctness of information in this document. Copyright by Volkswagen AG.

40 Golf Variant BlueMotion model year 2008 to model year 2010

General

Volkswagen vehicles are built according to the latest findings in safety engineering. To keep it that way, we recommend the use of only genuine Volkswagen spare parts. You can recognise this by the VW Audi logo and by the part number. It has been established that these parts are reliable, safe and suitable.

Despite constant appraisal of the market, we cannot assess other products on these points, even when in isolated cases they have been passed by official inspectors or have been granted official approval. Therefore, we cannot, of course, assume any liability if these products are installed.

> ⚠ **WARNING**
>
> *The products from Volkswagen genuine parts and Votex genuine accessories may differ in fitting requirements, torque specifications and so on.*
>
> *Always follow the respective fitting and operating instructions.*

The wheel and tyre combinations or changes listed in the vehicle tables refer exclusively to Volkswagen Genuine wheels. Approval of wheel and tyre combinations or a change to wheels from the accessories trade is not possible with the parts certificate attached here.

> ⚠ **WARNING**
>
> *The fitting instructions and torque specifications for wheels from Votex genuine accessories may differ from those intended for wheels from Volkswagen genuine parts.*
>
> *Therefore, always observe the torque settings for the wheel bolts as well as the respective fitting and operating instructions.*

40.1 Golf Variant BlueMotion, type 1KM model year 2008 to model year 2010

Appendix for parts certificate 3878/08

The parts certificate can be found on the Volkswagen ServiceNet under Accessories/Tyres, Wheels and Tyres, Wheels and Tyres Guide.

Type Approval No.: e1*2001/116*0328*11 to e1*2001/116*0328*14

Overview

Model engine output	Tyres	Tyre size	Wheel rim	Off-set in mm	Snow chains	Remarks
1.9l 77 kW TDI diesel engine	Standard tyres	195/65 R 15 91T	6 J x 15 ⇒ page 351	47	Yes	General information on: ◆ Winter tyres ⇒ page 15 ◆ Snow chains ⇒ page 18

satelettronica

Model engine output	Tyres	Tyre size	Wheel rim	Off-set in mm	Snow chains	Remarks
	Modification	195/65 R 15 91H/V	6 J x 15 ⇒ page 351	47	Yes	Tyre makes recommended by Volkswagen: ◆ Summer tyres ⇒ page 653 ◆ Winter tyres ⇒ page 687
		195/65 R 15 91T/H/V	6 1/2 J x 15 ⇒ page 352	50	Yes	
		205/60 R 15 91T/H/V	6 J x 15 ⇒ page 351	47	Yes	
		205/55 R 16 91T/H/V/W	6 1/2 J x 16 ⇒ page 353	50	No	
	Winter tyres	195/65 R 15 91Q/T/H	6 J x 15 ⇒ page 351	47	Yes	

Tyre inflation pressures are located on a sticker in the fuel tank flap or in ⇒ Maintenance ; Booklet ; Check tyres: condition, profile, inflation pressure, depth of tread .

40.2 Wheel allocation for Golf Variant BlueMotion, type 1KM model year 2008 to model year 2010

Explanation of information on wheels ⇒ page 59

Torque specifications for wheel bolts ⇒ Running gear, axles, steering; Rep. gr. 44 ; Torque specifications for fitting wheels

Pitch circle diameter:	112 mm
Number of wheel bolt holes:	5

40.2.1 6 J x 15

Caution

Observe the allocation of wheels and tyres to the respective engines, which are listed in the overview table ⇒ page 350 .

1K0 601 027 C, 1K0 601 027 H - Wheel and tyre combination
⇒ page 350

Size:	6 J x 15
Wheel offset in mm:	47
Wheel load in kg:	615

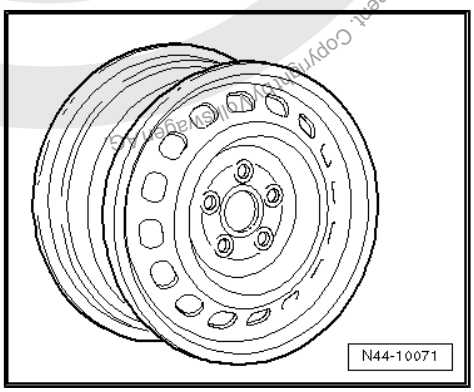

Protected by copyright. Copying for private or commercial purposes, in part or whole, is not permitted unless authorised by Volkswagen AG. Volkswagen AG does not guarantee or accept any liability with respect to the correctness of information in this document. Copyright by Volkswagen AG.
satelettronica

1K0 601 027 T - Wheel and tyre combination ⇒ page 350

Size:	6 J x 15
Wheel offset in mm:	47
Wheel load in kg:	615

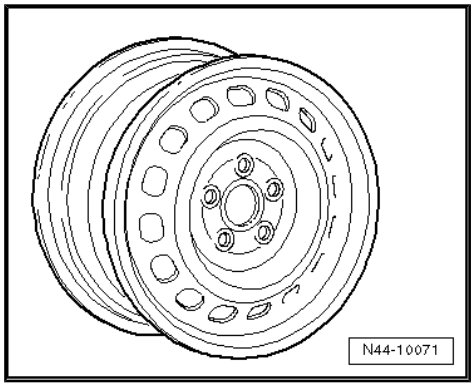

2K0 601 027 - Wheel and tyre combination ⇒ page 350

Size:	6 J x 15
Wheel offset in mm:	47
Wheel load in kg:	650

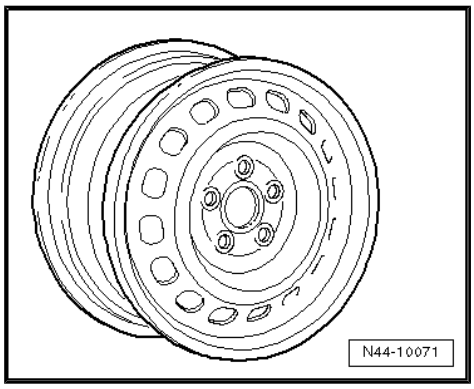

40.2.2 6 1/2 J x 15

Caution

Observe the allocation of wheels and tyres to the respective engines, which are listed in the overview table ⇒ page 350 *.*

1K0 601 025 A - Wheel and tyre combination ⇒ page 351

Size:	6 1/2 J x 15
Wheel offset in mm:	50
Wheel load in kg:	600

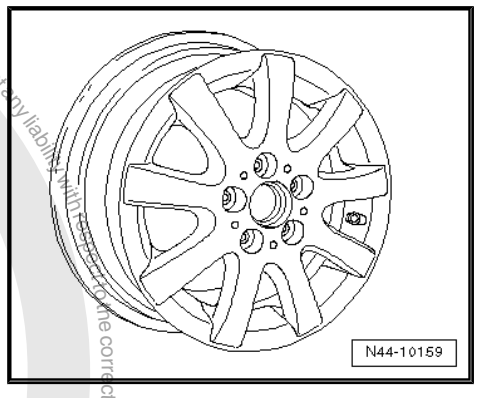

1K0 601 025 AK - Wheel and tyre combination ⇒ page 351

Size:	6 1/2 J x 15
Wheel offset in mm:	50
Wheel load in kg:	600

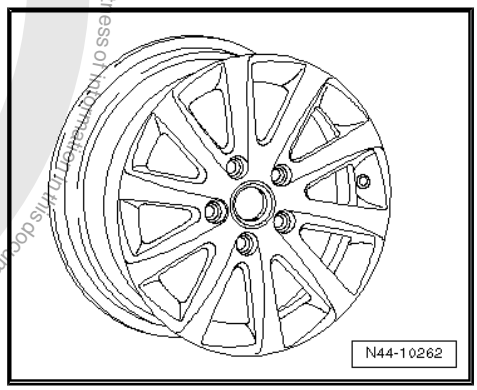

Protected by copyright. Copyright for private or commercial purposes, in part or in whole, is not permitted unless authorised by Volkswagen AG. Volkswagen AG does not guarantee or accept any liability with respect to the correctness of information in this document. Copyright by Volkswagen AG.

satelettronica

Protected by copyright. Copying for private or commercial purposes, in part or in whole, is not permitted unless authorised by Volkswagen AG. Volkswagen AG does not guarantee or accept any liability with respect to the correctness of information in this document.

1K0 601 025 AQ - Wheel and tyre combination ⇒ page 351

Size:	$6^1/_2$ J x 15
Wheel offset in mm:	50
Wheel load in kg:	600

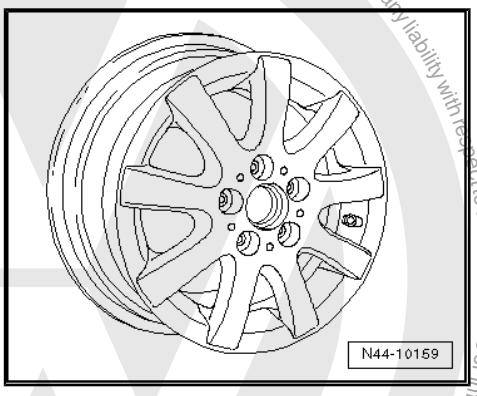

1K0 601 025 CA - Wheel and tyre combination ⇒ page 351

Size:	$6^1/_2$ J x 15
Wheel offset in mm:	50
Wheel load in kg:	600

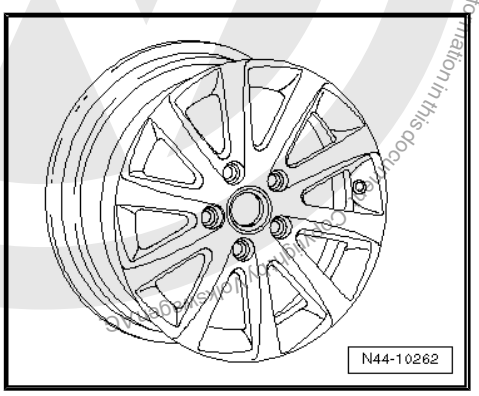

40.2.3 $6^1/_2$ J x 16

Caution

Observe the allocation of wheels and tyres to the respective engines, which are listed in the overview table ⇒ page 350 *.*

1K0 601 027 A - Wheel and tyre combination ⇒ page 351

Size:	$6^1/_2$ J x 16
Wheel offset in mm:	50
Wheel load in kg:	615

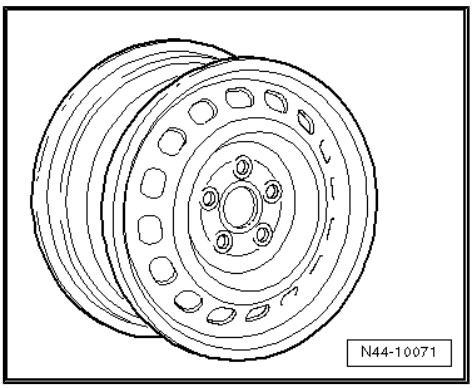

1K0 601 027 J, 1K0 601 027 K - Wheel and tyre combination ⇒ page 351

Size:	$6^1/_2$ J x 16
Wheel offset in mm:	50
Wheel load in kg:	615

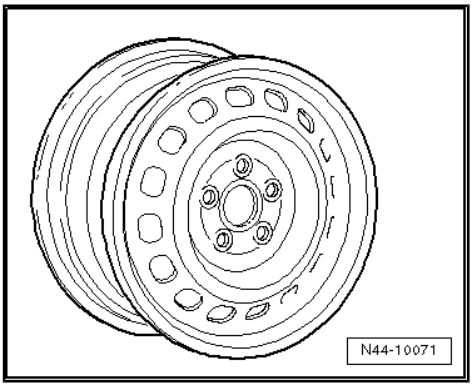

satelettronica

1K0 601 025 AJ - Wheel and tyre combination ⇒ page 351

Size:	$6^1/_2$ J x 16
Wheel offset in mm:	50
Wheel load in kg:	615

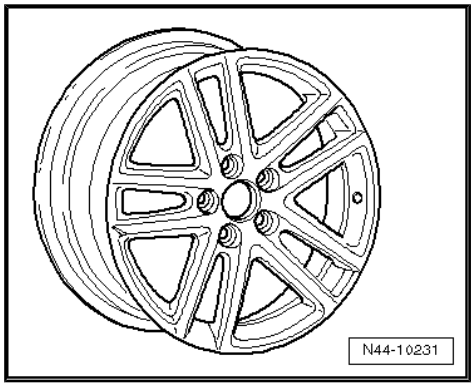

1K0 601 025 BC - Wheel and tyre combination ⇒ page 351

Size:	$6^1/_2$ J x 16
Wheel offset in mm:	50
Wheel load in kg:	615

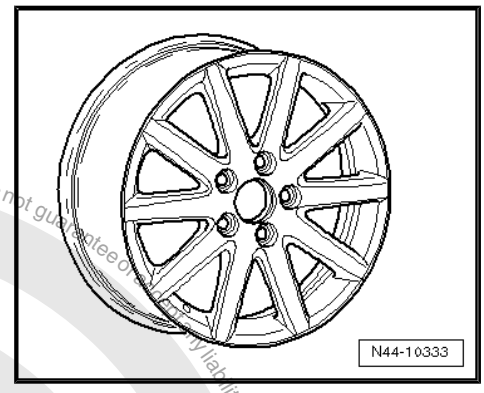

1K0 601 025 BM - Wheel and tyre combination ⇒ page 351

Size:	$6^1/_2$ J x 16
Wheel offset in mm:	50
Wheel load in kg:	615

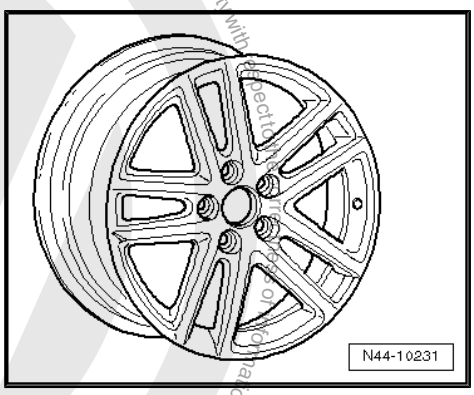

1K0 601 025 BR - Wheel and tyre combination ⇒ page 351

Size:	$6^1/_2$ J x 16
Wheel offset in mm:	50
Wheel load in kg:	615

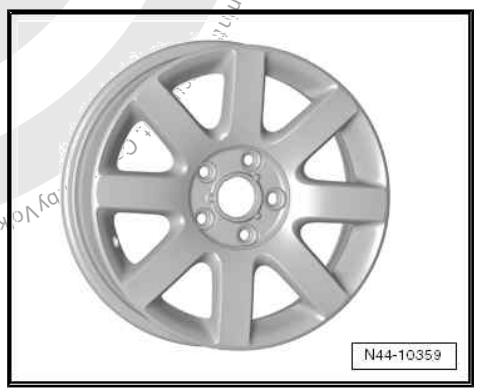

Protected by copyright. Copying for private or commercial purposes, in part or in whole, is not permitted unless authorised by Volkswagen AG. Volkswagen AG does not guarantee or assume any liability with respect to the correctness of information.
Copyright by Volkswagen AG.

satelettronica

1K0 601 025 BS - Wheel and tyre combination ⇒ page 351

Size:	$6^1/_2$ J x 16
Wheel offset in mm:	50
Wheel load in kg:	615

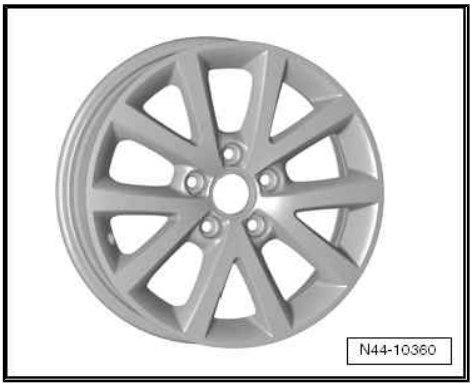

1K0 601 025 CB - Wheel and tyre combination ⇒ page 351

Size:	$6^1/_2$ J x 16
Wheel offset in mm:	50
Wheel load in kg:	615

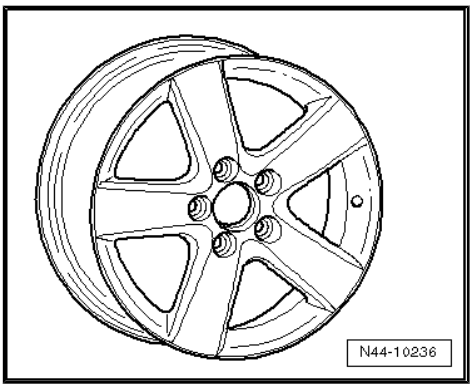

1K0 601 025 CG - Wheel and tyre combination ⇒ page 351

Size:	$6^1/_2$ J x 16
Wheel offset in mm:	50
Wheel load in kg:	615

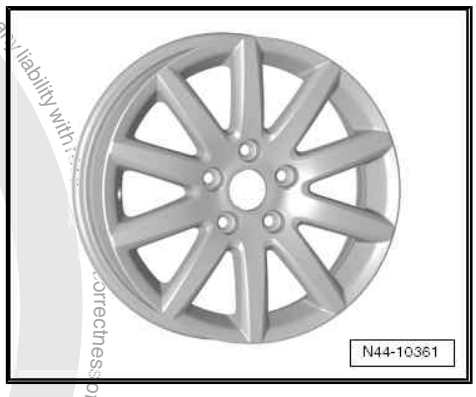

1T0 601 025 C - Wheel and tyre combination ⇒ page 351

Size:	$6^1/_2$ J x 16
Wheel offset in mm:	50
Wheel load in kg:	615

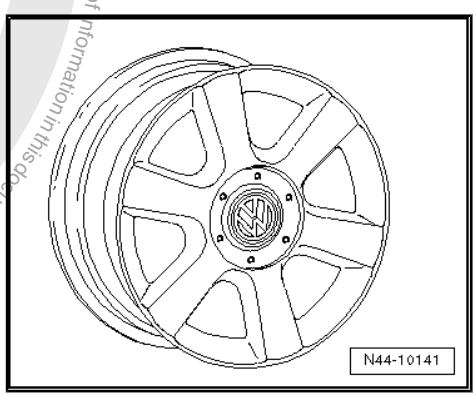

Protected by copyright. Copying for private or commercial purposes, in part or in whole, is not permitted unless authorised by Volkswagen AG. Volkswagen AG does not guarantee or accept any liability with respect to the correctness of information in this document. Copyright by Volkswagen AG.
satelettronica

1K0 601 025 F - Wheel and tyre combination ⇒ page 351

Size:	$6^1/_2$ J x 16
Wheel offset in mm:	50
Wheel load in kg:	615

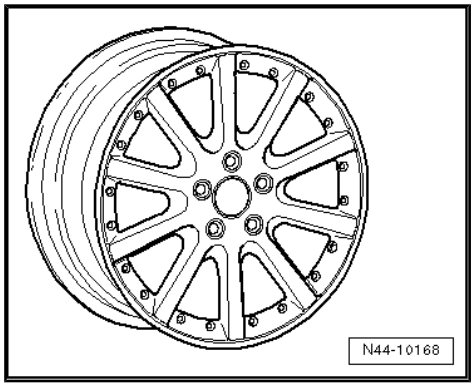

1K0 601 025 P - Wheel and tyre combination ⇒ page 351

Size:	$6^1/_2$ J x 16
Wheel offset in mm:	50
Wheel load in kg:	615

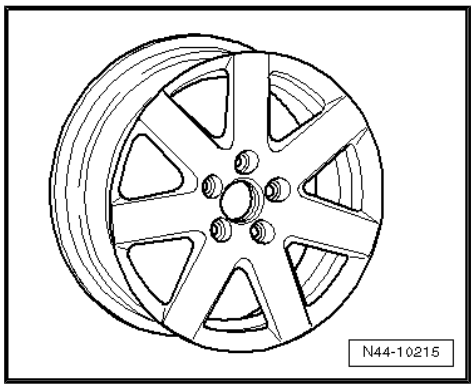

1K0 601 025 R - Wheel and tyre combination ⇒ page 351

Size:	$6^1/_2$ J x 16
Wheel offset in mm:	50
Wheel load in kg:	615

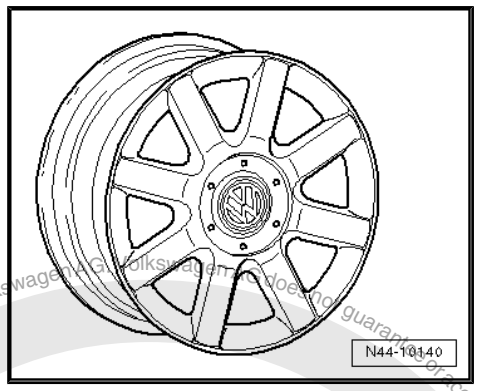

1T0 601 025 G, 1T0 601 025 K - Wheel and tyre combination ⇒ page 351

Size:	$6^1/_2$ J x 16
Wheel offset in mm:	50
Wheel load in kg:	615

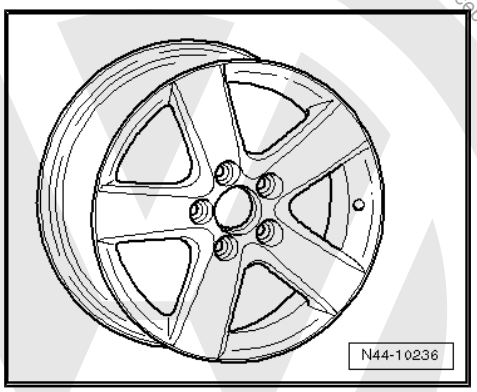

Protected by copyright. Copying for private or commercial purposes, in part or in whole, is not permitted unless authorised by Volkswagen AG. Volkswagen AG does not guarantee or accept any liability with respect to the correctness of information in this document. Copyright by Volkswagen AG.
satelettronica

1T0 601 025 M - Wheel and tyre combination ⇒ page 351

Size:	$6^1/_2$ J x 16
Wheel offset in mm:	50
Wheel load in kg:	615

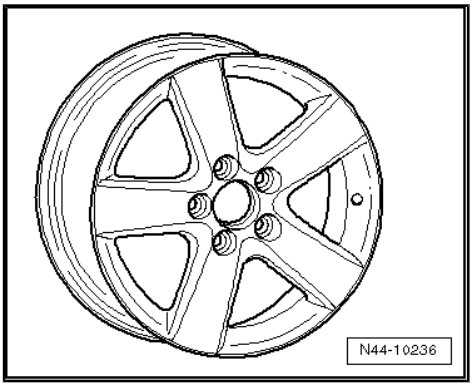

1T0 601 025 R - Wheel and tyre combination ⇒ page 351

Size:	$6^1/_2$ J x 16
Wheel offset in mm:	50
Wheel load in kg:	615

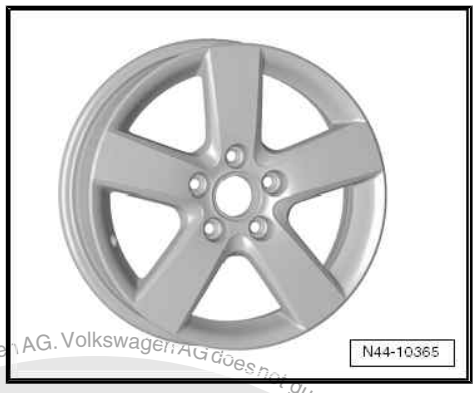

Protected by copyright. Copying for private or commercial purposes, in part or in whole, is not permitted unless authorised by Volkswagen AG. Volkswagen AG does not guarantee or accept any liability with respect to the correctness of information in this document. Copyright by Volkswagen AG.
satelettronica

41 Jetta Model Year 2006 to Model Year 2011

General

Volkswagen vehicles are built according to the latest findings in safety engineering. To keep it that way, we recommend the use of only genuine Volkswagen spare parts. You can recognise this by the VW Audi logo and by the part number. It has been established that these parts are reliable, safe and suitable.

Despite constant appraisal of the market, we cannot assess other products on these points, even when in isolated cases they have been passed by official inspectors or have been granted official approval. Therefore, we cannot, of course, assume any liability if these products are installed.

> ⚠ **WARNING**
>
> *The products from Volkswagen genuine parts and Volkswagen genuine accessories may differ in fitting requirements, torque specifications and so on.*
>
> *Always follow the respective fitting and operating instructions.*

The wheel and tyre combinations or changes listed in the vehicle tables refer exclusively to Volkswagen Genuine wheels. Approval of wheel and tyre combinations or a change to wheels from the accessories trade is not possible with the certificate statement attached here.

> ⚠ **WARNING**
>
> *The fitting instructions and torque specifications for wheels from Volkswagen genuine accessories may differ from those intended for wheels from Volkswagen genuine parts.*
>
> *Therefore, always observe the torque settings for the wheel bolts as well as the respective fitting and operating instructions.*

41.1 Jetta, type 1KM model year 2006

Appendix for certificate statement 8106807129

The certificate statement can be found on the Volkswagen ServiceNet under Accessories/Tyres, Wheels and Tyres, Wheels and Tyres Guide.

Type Approval No.: e1*2001/116*0328*00 to e1*2001/116*0328*04

Overview

Model engine output	Tyres	Tyre size	Wheel rim	Off-set in mm	Snow chains	Remarks
1.6l 75 kW; 1.6l 85 kW; petrol engine	Standard tyres	195/65 R 15 91H	6 J x 15 ⇒ page 370	47	Yes	General information on: ◆ Winter tyres ⇒ page 15 ◆ Snow chains ⇒ page 18

satelettronica
Protected by copyright. Copying for private or commercial purposes, in part or in whole, is not permitted unless authorised by Volkswagen AG. Volkswagen AG does not guarantee or accept any liability with respect to the correctness of information in this document. Copyright by Volkswagen AG.

Model engine output	Tyres	Tyre size	Wheel rim	Off-set in mm	Snow chains	Remarks
1.9l 77 kW TDI diesel engine	Modification	195/65 R 15 91V	6 J x 15 ⇒ page 370	47	Yes	Tyre makes recommended by Volkswagen: ◆ Summer tyres ⇒ page 653 ◆ All-season tyres ⇒ page 671 ◆ Winter tyres ⇒ page 688
		195/65 R 15 91H/V	6 1/2 J x 15 ⇒ page 371	50	Yes	
		205/60 R 15 91H/V	6 J x 15 ⇒ page 370	47	Yes	
		205/55 R 16 91H/V/W	6 1/2 J x 16 ⇒ page 373	50	No	
		225/45 R 17 91H/V/W	7 J x 17 ⇒ page 378	54	No	
		225/40 R 18 92Y* ⇒ page 359	7 1/2 J x 18 ⇒ page 382	51	No	* 225/40 R 18 92Y tyres on 7 1/2 J x 18 rims with an offset of 51 are permitted only on vehicles with sports running gear and rear axle camber of -1°45'! ⇒ page 383
	Winter tyres	195/65 R 15 91Q/T/H	6 J x 15 ⇒ page 370	47	Yes	
		205/55 R 16 91Q/T/H	6 J x 16 ⇒ page 372	50	Yes	
2.0l 100 kW TDI; 2.0l 103 kW TDI; Diesel engines	Standard tyres	205/55 R 16 91V	6 1/2 J x 16 ⇒ page 373	50	No	
2.0l 110 kW; petrol engine	Modification	195/65 R 15 91V	6 J x 15 ⇒ page 370	47	Yes	
		195/65 R 15 91V	6 1/2 J x 15 ⇒ page 371	50	Yes	
		205/60 R 15 91V	6 J x 15 ⇒ page 370	47	Yes	
		205/55 R 16 91W	6 1/2 J x 16 ⇒ page 373	50	No	
		225/45 R 17 91V/W	7 J x 17 ⇒ page 378	54	No	
		225/40 R 18 92Y* ⇒ page 359	7 1/2 J x 18 ⇒ page 382	51	No	

satelettronica
Copyright by Volkswagen AG. Volkswagen AG does not accept any liability with respect to the correctness of information in this document. Protected by copyright. Copying for private or commercial purposes, in part or in whole, is not permitted unless authorised by Volkswagen AG.

Model engine output	Tyres	Tyre size	Wheel rim	Off-set in mm	Snow chains	Remarks
	Winter tyres	195/65 R 15 91Q/T/H	6 J x 15 ⇒ page 370	47	Yes	
		205/55 R 16 91Q/T/H	6 J x 16 ⇒ page 372	50	Yes	
2.0l 147 kW; petrol engine	Standard tyres	205/55 R 16 91W	6 1/2 J x 16 ⇒ page 373	50	No	
	Modification	225/45 R 17 91W	7 J x 17 ⇒ page 378	54	No	
		225/40 R 18 92Y* ⇒ page 359	7 1/2 J x 18 ⇒ page 382	51	No	
	Winter tyres	205/55 R 16 91Q/T/H	6 J x 16 ⇒ page 372	50	Yes	

Tyre pressure information is located on the tyre pressure plate on the inside of the tank flap or on the driver side B-pillar.

41.2 Jetta, type 1KM model year 2007 to model year 2008

Appendix for certificate statement 8106807129

The certificate statement can be found on the Volkswagen ServiceNet under Accessories/Tyres, Wheels and Tyres, Wheels and Tyres Guide.

Type Approval No.: e1*2001/116*0328*05 to e1*2001/116*0328*11

Overview

Model engine output	Tyres	Tyre size	Wheel rim	Off-set in mm	Snow chains	Remarks
1.6l 75 kW; petrol engine	Standard tyres	195/65 R 15 91T	6 J x 15 ⇒ page 370	47	Yes	General information on: ◆ Winter tyres ⇒ page 15 ◆ Snow chains ⇒ page 18
1.9l 77 kW TDI diesel engine with automatic gearbox	Modification	195/65 R 15 91H/V	6 J x 15 ⇒ page 370	47	Yes	Tyre makes recommended by Volkswagen: ◆ Summer tyres ⇒ page 653 ◆ All-season tyres ⇒ page 671 ◆ Winter tyres ⇒ page 688
		195/65 R 15 91T/H/V	6 1/2 J x 15 ⇒ page 371	50	Yes	
		205/60 R 15 91T/H/V	6 J x 15 ⇒ page 370	47	Yes	

Protected by copyright. Copying for private or commercial purposes, in part or in whole, is not permitted unless authorised by Volkswagen AG. Volkswagen AG does not guarantee or accept any liability with respect to the correctness of information in this document. Copyright by Volkswagen AG.
satelettronica

Model engine output	Tyres	Tyre size	Wheel rim	Off-set in mm	Snow chains	Remarks
		205/55 R 16 91T/H/V	$6^1/_2$ J x 16 ⇒ page 373	50	No	
		225/45 R 17 91T/H/V	7 J x 17 ⇒ page 378	54	No	
		225/40 R 18 92Y* ⇒ page 361	$7^1/_2$ J x 18 ⇒ page 382	51	No	* 225/40 R 18 92Y tyres on $7^1/_2$ J x 18 rims with an offset of 51 are permitted only on vehicles with sports running gear and rear axle camber of -1°45'!
	Winter tyres	195/65 R 15 91Q/T/H	6 J x 15 ⇒ page 370	47	Yes	
		205/55 R 16 91Q/T/H	6 J x 16 ⇒ page 372	50	Yes	
1.6l 85 kW; 1.4l 90 kW petrol engine	Standard tyres	195/65 R 15 91H	6 J x 15 ⇒ page 370	47	Yes	General information on: ◆ Winter tyres ⇒ page 15 ◆ Snow chains ⇒ page 18
1.9l 77 kW TDI diesel engine with manual gearbox	Modification	195/65 R 15 91V	6 J x 15 ⇒ page 370	47	Yes	Tyre makes recommended by Volkswagen:
2.0l 100 kW TDI; 2.0l 103 kW TDI; Diesel engines		195/65 R 15 91H/V	$6^1/_2$ J x 15 ⇒ page 371	50	Yes	◆ Summer tyres ⇒ page 653 ◆ All-season tyres ⇒ page 671 ◆ Winter tyres ⇒ page 688
		205/60 R 15 91H/V	6 J x 15 ⇒ page 370	47	Yes	
		205/55 R 16 91H/V/W	$6^1/_2$ J x 16 ⇒ page 373	50	No	
		225/45 R 17 91H/V/W	7 J x 17 ⇒ page 378	54	No	
		225/40 R 18 92Y* ⇒ page 361	$7^1/_2$ J x 18 ⇒ page 382	51	No	* 225/40 R 18 92Y tyres on $7^1/_2$ J x 18 rims with an offset of 51 are permitted only on vehicles with sports running gear and rear axle camber of -1°45'!
	Winter tyres	195/65 R 15 91Q/T/H	6 J x 15 ⇒ page 370	47	Yes	

Protected by copyright. Copying for private or commercial purposes, in part or in whole, is not permitted unless authorised by Volkswagen AG. Volkswagen AG does not guarantee or accept any liability with respect to the correctness of information in this document. Copyright by Volkswagen AG.

satelettronica

Model engine output	Tyres	Tyre size	Wheel rim	Off-set in mm	Snow chains	Remarks
		205/55 R 16 91Q/T/H	6 J x 16 ⇒ page 372	50	Yes	
1.4l 103 kW; 2.0l 110 kW; petrol engine	Standard tyres	205/55 R 16 91V	6 1/2 J x 16 ⇒ page 373	50	No	
	Modification	195/65 R 15 91V	6 J x 15 ⇒ page 370	47	Yes	
		195/65 R 15 91V	6 1/2 J x 15 ⇒ page 371	50	Yes	
		205/60 R 15 91V	6 J x 15 ⇒ page 370	47	Yes	
		205/55 R 16 91V/W	6 1/2 J x 16 ⇒ page 373	50	No	
		225/45 R 17 91V/W	7 J x 17 ⇒ page 378	54	No	
		225/40 R 18 92Y* ⇒ page 361	7 1/2 J x 18 ⇒ page 382	51	No	
	Winter tyres	195/65 R 15 91Q/T/H	6 J x 15 ⇒ page 370	47	Yes	
		205/55 R 16 91Q/T/H	6 J x 16 ⇒ page 372	50	Yes	
1.4l 125 kW; petrol engine	Standard tyres	205/55 R 16 91V	6 1/2 J x 16 ⇒ page 373	50	No	
2.0l 125 kW TDI diesel engine	Modification	225/45 R 17 91V/W	7 J x 17 ⇒ page 378	54	No	
		225/40 R 18 92Y* ⇒ page 361	7 1/2 J x 18 ⇒ page 382	51	No	
	Winter tyres	205/55 R 16 91Q/T/H	6 J x 16 ⇒ page 372	50	Yes	
2.0l 147 kW; petrol engine	Standard tyres	205/55 R 16 91W	6 1/2 J x 16 ⇒ page 373	50	No	
	Modification	225/45 R 17 91W	7 J x 17 ⇒ page 378	54	No	
		225/40 R 18 92Y* ⇒ page 361	7 1/2 J x 18 ⇒ page 382	51	No	
	Winter tyres	205/55 R 16 91Q/T/H	6 J x 16 ⇒ page 372	50	Yes	

satelettronica
Protected by copyright. Copying for private or commercial purposes, in part or in whole, is not permitted unless authorised by Volkswagen AG. Volkswagen AG does not guarantee or accept any liability with respect to the correctness of information in this document. Copyright by Volkswagen AG.

Tyre pressure information is located on the tyre pressure plate on the inside of the tank flap or on the driver side B-pillar.

41.3 Jetta, type 1KM model year 2009 to model year 2011

Caution

*Observe wheel and tyre combinations for vehicles as of type approval number: e1*2001/116*0328*17* ⇒ page 367 *.*

Appendix for certificate statement 8106807129

The certificate statement can be found on the Volkswagen ServiceNet under Accessories/Tyres, Wheels and Tyres, Wheels and Tyres Guide.

Type Approval No.: e1*2001/116*0328*12 to e1*2001/116*0328*16

Overview

Model engine output	Tyres	Tyre size	Wheel rim	Off-set in mm	Snow chains	Remarks
1.6l 75 kW; petrol engine	Standard tyres	195/65 R 15 91T	6 J x 15 ⇒ page 370	47	Yes	General information on: ◆ Winter tyres ⇒ page 15 ◆ Snow chains ⇒ page 18
1.6l 77 kW TDI; 1.9l 77 kW TDI; diesel engine	Modification	195/65 R 15 91H/V	6 J x 15 ⇒ page 370	47	Yes	Tyre makes recommended by Volkswagen: ◆ Summer tyres ⇒ page 653 ◆ All-season tyres ⇒ page 671 ◆ Winter tyres ⇒ page 688
		195/65 R 15 91T/H/V	$6^1/_2$ J x 15 ⇒ page 371	50	Yes	
		205/60 R 15 91T/H/V	6 J x 15 ⇒ page 370	47	Yes	
		205/55 R 16 91T/H/V	$6^1/_2$ J x 16 ⇒ page 373	50	No	
		225/45 R 17 91T/H/V	7 J x 17 ⇒ page 378	54	No	
		225/45 R 17 91T/H/V/W * ⇒ page 363	$7^1/_2$ J x 17 ⇒ page 381	51	No	* 225/45 R 17 91T/H/V/W tyres on $7^1/_2$ J x 17 rims with an offset of 51 are permitted only on vehicles with sports running gear!

Protected by copyright. Copying for private or commercial purposes, in part or in whole, is not permitted unless authorised by Volkswagen AG. Volkswagen AG does not guarantee or accept any liability with respect to the correctness of information in this document. Copyright by Volkswagen AG.

satelettronica

Model engine output	Tyres	Tyre size	Wheel rim	Off-set in mm	Snow chains	Remarks
		225/40 R 18 92Y** ⇒ page 364	$7^1/_2$ J x 18 ⇒ page 382	51	No	** 225/40 R 18 92Y tyres on $7^1/_2$ J x 18 rims with an offset of of 51 are permitted only on vehicles with sports running gear and rear axle camber of -1°45'!
	Winter tyres	195/65 R 15 91Q/T/H	6 J x 15 ⇒ page 370	47	Yes	
		205/55 R 16 91Q/T/H	6 J x 16 ⇒ page 372	50	Yes	
1.6l 85 kW; 1.4l 90 kW Petrol engine	Standard tyres	195/65 R 15 91H	6 J x 15 ⇒ page 370	47	Yes	
	Modification	195/65 R 15 91V	6 J x 15 ⇒ page 370	47	Yes	
		195/65 R 15 91H/V	$6^1/_2$ J x 15 ⇒ page 371	50	Yes	
		205/60 R 15 91H/V	6 J x 15 ⇒ page 370	47	Yes	
		205/55 R 16 91H/V/W	$6^1/_2$ J x 16 ⇒ page 373	50	No	
		225/45 R 17 91H/V/W	7 J x 17 ⇒ page 378	54	No	
		225/45 R 17 91H/V/W * ⇒ page 364	$7^1/_2$ J x 17 ⇒ page 381	51	No	* 225/45 R 17 91H/V/W tyres on $7^1/_2$ J x 17 rims with an offset of 51 are only possible in combination with sports running gear!
		225/40 R 18 92Y** ⇒ page 364	$7^1/_2$ J x 18 ⇒ page 382	51	No	** 225/40 R 18 92Y tyres on $7^1/_2$ J x 18 rims with an offset of of 51 are permitted only on vehicles with sports running gear and rear axle camber of -1°45'!
	Winter tyres	195/65 R 15 91Q/T/H	6 J x 15 ⇒ page 370	47	Yes	
		205/55 R 16 91Q/T/H	6 J x 16 ⇒ page 372	50	Yes	
2.0l 100 kW TDI; 2.0l 103 kW TDI; Diesel engines	Standard tyres	195/65 R 15 91H	6 J x 15 ⇒ page 370	47	Yes	

Protected by copyright. Copying for private or commercial purposes, in part or in whole, is not permitted unless authorised by Volkswagen AG. Volkswagen AG does not guarantee or accept any liability with respect to the correctness of information in this document. Copyright by Volkswagen AG.
satelettronica

Model engine output	Tyres	Tyre size	Wheel rim	Off-set in mm	Snow chains	Remarks
	Modification	195/65 R 15 91V	6 J x 15 ⇒ page 370	47	Yes	
		195/65 R 15 91H/V	6 1/2 J x 15 ⇒ page 371	50	Yes	
		205/60 R 15 91H/V	6 J x 15 ⇒ page 370	47	Yes	
		205/55 R 16 91H/V/W	6 1/2 J x 16 ⇒ page 373	50	No	
		225/45 R 17 91H/V/W	7 J x 17 ⇒ page 378	54	No	
		225/40 R 18 92Y** ⇒ page 365	7 1/2 J x 18 ⇒ page 382	51	No	** 225/40 R 18 92Y tyres on 7 1/2 J x 18 rims with an offset of of 51 are permitted only on vehicles with sports running gear and rear axle camber of -1°45'!
	Winter tyres	195/65 R 15 91Q/T/H	6 J x 15 ⇒ page 370	47	Yes	
		205/55 R 16 91Q/T/H	6 J x 16 ⇒ page 372	50	Yes	
1.4l 103 kW; 2.0l 110 kW; petrol engine	Standard tyres	205/55 R 16 91V	6 1/2 J x 16 ⇒ page 373	50	No	
	Modification	195/65 R 15 91V	6 J x 15 ⇒ page 370	47	Yes	
		195/65 R 15 91V	6 1/2 J x 15 ⇒ page 371	50	Yes	
		205/60 R 15 91V	6 J x 15 ⇒ page 370	47	Yes	
		205/55 R 16 91W	6 1/2 J x 16 ⇒ page 373	50	No	
		225/45 R 17 91V/W	7 J x 17 ⇒ page 378	54	No	
		225/45 R 17 91V/W * ⇒ page 365	7 1/2 J x 17 ⇒ page 381	51	No	* 225/45 R 17 91V/W tyres on 7 1/2 J x 17 rims with an offset of 51 are permitted only on vehicles with sports running gear!

Protected by copyright. Copying for private or commercial purposes, in part or in whole, is not permitted unless authorised by Volkswagen AG. Volkswagen AG does not guarantee or accept any liability with respect to the correctness of information in this document. Copyright by Volkswagen AG.

satelettronica

Model engine output	Tyres	Tyre size	Wheel rim	Off-set in mm	Snow chains	Remarks
		225/40 R 18 92Y** ⇒ page 366	$7^1/_2$ J x 18 ⇒ page 382	51	No	** 225/40 R 18 92Y tyres on $7^1/_2$ J x 18 rims with an offset of of 51 are permitted only on vehicles with sports running gear and rear axle camber of -1°45'!
	Winter tyres	195/65 R 15 91Q/T/H	6 J x 15 ⇒ page 370	47	Yes	
		205/55 R 16 91Q/T/H	6 J x 16 ⇒ page 372	50	Yes	
1.4l 125 kW petrol engine	Standard tyres	205/55 R 16 91V	$6^1/_2$ J x 16 ⇒ page 373	50	No	
	Modification	225/45 R 17 91V/W	7 J x 17 ⇒ page 378	54	No	
		225/45 R 17 91V/W * ⇒ page 366	$7^1/_2$ J x 17 ⇒ page 381	51	No	* 225/45 R 17 91V/W tyres on $7^1/_2$ J x 17 rims with an offset of 51 are permitted only on vehicles with sports running gear!
		225/40 R 18 92Y** ⇒ page 366	$7^1/_2$ J x 18 ⇒ page 382	51	No	** 225/40 R 18 92Y tyres on $7^1/_2$ J x 18 rims with an offset of of 51 are permitted only on vehicles with sports running gear and rear axle camber of -1°45'!
	Winter tyres	205/55 R 16 91Q/T/H	6 J x 16 ⇒ page 372	50	Yes	
1.4l 118 kW petrol engine 2.0l 125 kW TDI diesel engine	Standard tyres	205/55 R 16 91V	$6^1/_2$ J x 16 ⇒ page 373	50	No	
	Modification	225/45 R 17 91V/W	7 J x 17 ⇒ page 378	54	No	
		225/40 R 18 92Y** ⇒ page 366	$7^1/_2$ J x 18 ⇒ page 382	51	No	** 225/40 R 18 92Y tyres on $7^1/_2$ J x 18 rims with an offset of of 51 are permitted only on vehicles with sports running gear and rear axle camber of -1°45'!
	Winter tyres	205/55 R 16 91Q/T/H	6 J x 16 ⇒ page 372	50	Yes	
2.0l 147 kW; petrol engine	Standard tyres	205/55 R 16 91W	$6^1/_2$ J x 16 ⇒ page 373	50	No	

Protected by copyright. Copying for private or commercial purposes, in part or in whole, is not permitted unless authorised by Volkswagen AG. Volkswagen AG does not guarantee or accept any liability with respect to the correctness of information in this document. Copyright by Volkswagen AG.

satelettronica

Model engine output	Tyres	Tyre size	Wheel rim	Off-set in mm	Snow chains	Remarks
	Modification	225/45 R 17 91W	7 J x 17 ⇒ page 378	54	No	
		225/45 R 17 91W* ⇒ page 367	7 1/2 J x 17 ⇒ page 381	51	No	* 225/45 R 17 91W tyres on 7 1/2 J x 17 rims with an offset of 51 are permitted only on vehicles with sports running gear!
		225/40 R 18 92Y** ⇒ page 367	7 1/2 J x 18 ⇒ page 382	51	No	** 225/40 R 18 92Y tyres on 7 1/2 J x 18 rims with an offset of of 51 are permitted only on vehicles with sports running gear and rear axle camber of -1°45'!
	Winter tyres	205/55 R 16 91Q/T/H	6 J x 16 ⇒ page 372	50	Yes	

Tyre pressure information is located on the tyre pressure plate on the inside of the tank flap or on the driver side B-pillar.

Appendix for certificate statement 8106807129

The certificate statement can be found on the Volkswagen ServiceNet under Accessories/Tyres, Wheels and Tyres, Wheels and Tyres Guide.

Type Approval No.: e1*2001/116*0328*17 to e1*2001/116*0328*18

Overview

Model engine output	Tyres	Tyre size	Wheel rim	Off-set in mm	Snow chains	Remarks
1.6l 75 kW; petrol engine	Standard tyres	195/65 R 15 91T	6 J x 15 ⇒ page 370	47	Yes	General information on: ◆ Winter tyres ⇒ page 15 ◆ Snow chains ⇒ page 18
1.6l 66 kW TDI; 1.6l 77 kW TDI; 1.9l 77 kW TDI diesel engine	Modification	195/65 R 15 91H/V	6 J x 15 ⇒ page 370	47	Yes	Tyre makes recommended by Volkswagen: ◆ Summer tyres ⇒ page 653 ◆ All-season tyres ⇒ page 671 ◆ Winter tyres ⇒ page 688
		195/65 R 15 91T/H/V	6 1/2 J x 15 ⇒ page 371	50	Yes	
		205/60 R 15 91T/H/V	6 J x 15 ⇒ page 370	47	Yes	

satelettronica

Model engine output	Tyres	Tyre size	Wheel rim	Off-set in mm	Snow chains	Remarks
		205/55 R 16 91T/H/V	$6^1/_2$ J x 16 ⇒ page 373	50	No	
		225/45 R 17 91T/H/V	7 J x 17 ⇒ page 378	54	No	
		225/45 R 17 91T/H/V/W * ⇒ page 368	$7^1/_2$ J x 17 ⇒ page 381	51	No	* 225/45 R 17 91T/H/V/W tyres on $7^1/_2$ J x 17 rims with an offset of 51 are permitted only on vehicles with sports running gear!
		225/40 R 18 92Y** ⇒ page 368	$7^1/_2$ J x 18 ⇒ page 382	51	No	** 225/40 R 18 92Y tyres on $7^1/_2$ J x 18 rims with an offset of of 51 are permitted only on vehicles with sports running gear and rear axle camber of -1°45'!
	Winter tyres	195/65 R 15 91Q/T/H	6 J x 15 ⇒ page 370	47	Yes	
		205/55 R 16 91Q/T/H	6 J x 16 ⇒ page 372	50	Yes	
1.4l 90 kW petrol engine	Standard tyres	195/65 R 15 91H	6 J x 15 ⇒ page 370	47	Yes	
	Modification	195/65 R 15 91V	6 J x 15 ⇒ page 370	47	Yes	
		195/65 R 15 91H/V	$6^1/_2$ J x 15 ⇒ page 371	50	Yes	
		205/60 R 15 91H/V	6 J x 15 ⇒ page 370	47	Yes	
		205/55 R 16 91H/V/W	$6^1/_2$ J x 16 ⇒ page 373	50	No	
		225/45 R 17 91H/V/W	7 J x 17 ⇒ page 378	54	No	
		225/45 R 17 91H/V/W * ⇒ page 368	$7^1/_2$ J x 17 ⇒ page 381	51	No	* 225/45 R 17 91H/V/W tyres on $7^1/_2$ J x 17 rims with an offset of 51 are only possible in combination with sports running gear!

Protected by copyright. Copying for private or commercial purposes, in part or in whole, is not permitted unless authorised by Volkswagen AG. Volkswagen AG does not guarantee or accept any liability with respect to the correctness of information. Copyright by Volkswagen AG.

satelettronica

Model engine output	Tyres	Tyre size	Wheel rim	Off-set in mm	Snow chains	Remarks
		225/40 R 18 92Y** ⇒ page 369	$7^1/_2$ J x 18 ⇒ page 382	51	No	** 225/40 R 18 92Y tyres on $7^1/_2$ J x 18 rims with an offset of of 51 are permitted only on vehicles with sports running gear and rear axle camber of -1°45'!
	Winter tyres	195/65 R 15 91Q/T/H	6 J x 15 ⇒ page 370	47	Yes	
		205/55 R 16 91Q/T/H	6 J x 16 ⇒ page 372	50	Yes	
2.0l 100 kW TDI; 2.0l 103 kW TDI; diesel engines	Standard tyres	195/65 R 15 91H	6 J x 15 ⇒ page 370	47	Yes	
	Modification	195/65 R 15 91V	6 J x 15 ⇒ page 370	47	Yes	
		195/65 R 15 91H/V	$6^1/_2$ J x 15 ⇒ page 371	50	Yes	
		205/60 R 15 91H/V	6 J x 15 ⇒ page 370	47	Yes	
		205/55 R 16 91H/V/W	$6^1/_2$ J x 16 ⇒ page 373	50	No	
		225/45 R 17 91H/V/W	7 J x 17 ⇒ page 378	54	No	
		225/40 R 18 92Y** ⇒ page 369	$7^1/_2$ J x 18 ⇒ page 382	51	No	** 225/40 R 18 92Y tyres on $7^1/_2$ J x 18 rims with an offset of of 51 are permitted only on vehicles with sports running gear and rear axle camber of -1°45'!
	Winter tyres	195/65 R 15 91Q/T/H	6 J x 15 ⇒ page 370	47	Yes	
		205/55 R 16 91Q/T/H	6 J x 16 ⇒ page 372	50	Yes	
1.4l 118 kW petrol engine	Standard tyres	205/55 R 16 91V	$6^1/_2$ J x 16 ⇒ page 373	50	No	
2.0l 125 kW TDI diesel engine	Modification	225/45 R 17 91V/W	7 J x 17 ⇒ page 378	54	No	

Protected by copyright. Copying for private or commercial purposes, in part or in whole, is not permitted unless authorised by Volkswagen AG. Volkswagen AG does not guarantee or accept any liability with respect to the correctness of information in this document. Copyright by Volkswagen AG.
satelettronica

Model engine output	Tyres	Tyre size	Wheel rim	Off-set in mm	Snow chains	Remarks
		225/40 R 18 92Y** ⇒ page 370	$7^1/_2$ J x 18 ⇒ page 382	51	No	** 225/40 R 18 92Y tyres on $7^1/_2$ J x 18 rims with an offset of of 51 are permitted only on vehicles with sports running gear and rear axle camber of -1°45'!
	Winter tyres	205/55 R 16 91Q/T/H	6 J x 16 ⇒ page 372	50	Yes	
2.0l 147 kW; petrol engine	Standard tyres	205/55 R 16 91V	$6^1/_2$ J x 16 ⇒ page 373	50	No	
	Modification	225/45 R 17 91V/W	7 J x 17 ⇒ page 378	54	No	
		225/45 R 17 91V/W * ⇒ page 370	$7^1/_2$ J x 17 ⇒ page 381	51	No	* 225/45 R 17 91W tyres on $7^1/_2$ J x 17 rims with an offset of 51 are permitted only on vehicles with sports running gear!
		225/40 R 18 92Y** ⇒ page 370	$7^1/_2$ J x 18 ⇒ page 382	51	No	** 225/40 R 18 92Y tyres on $7^1/_2$ J x 18 rims with an offset of of 51 are permitted only on vehicles with sports running gear and rear axle camber of -1°45'!
	Winter tyres	205/55 R 16 91Q/T/H	6 J x 16 ⇒ page 372	50	Yes	

Tyre pressure information is located on the tyre pressure plate on the inside of the tank flap or on the driver side B-pillar.

41.4 Wheel allocation for Jetta, type 1KM model year 2006 to model year 2011

Explanation of information on wheels ⇒ page 59

Torque settings for wheel bolts ⇒ Running gear, axles, steering; Rep. gr. 44 ; Torque settings for fitting wheels

Pitch circle diameter:	112 mm
Number of wheel bolt holes:	5

41.4.1 6 J x 15

Caution

Observe the allocation of wheels and tyres to the respective engines, which are listed in the overview table ⇒ page 358 .

Protected by copyright. Copying for private or commercial purposes, in part or in whole, is not permitted unless authorised by Volkswagen AG. Volkswagen AG does not guarantee or assume any liability with respect to the correctness of information in this document. Copyright by Volkswagen AG.
satelettronica

1K0 601 027 C, 1K0 601 027 H - Wheel and tyre combination ⇒ page 358

Size:	6 J x 15
Wheel offset in mm:	47
Wheel load in kg:	615

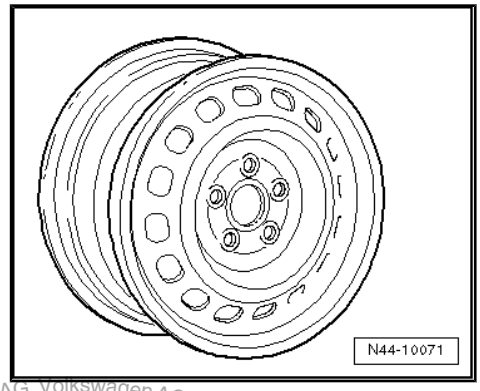

1K0 601 027 T - Wheel and tyre combination ⇒ page 358

Size:	6 J x 15
Wheel offset in mm:	47
Wheel load in kg:	615

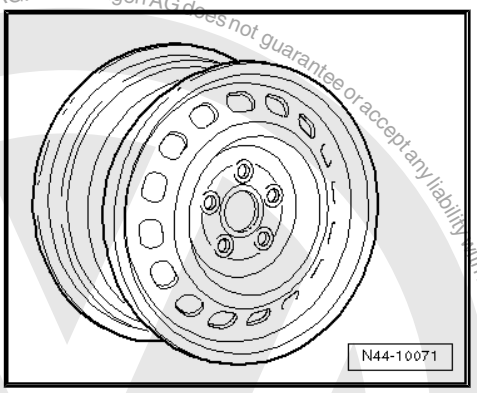

2K0 601 027 - Wheel and tyre combination ⇒ page 358

Size:	6 J x 15
Wheel offset in mm:	47
Wheel load in kg:	650

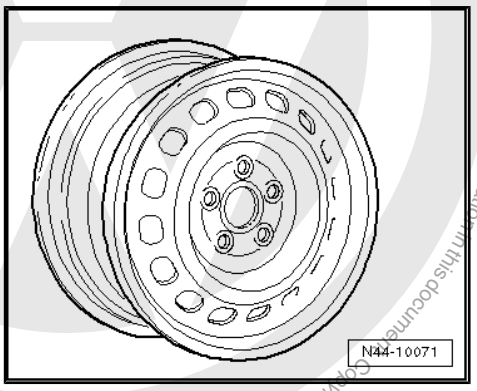

41.4.2 6 1/2 J x 15

Caution

Observe the allocation of wheels and tyres to the respective engines, which are listed in the overview table ⇒ page 358 *.*

5k0 601 025 J - Wheel and tyre combination ⇒ page 359

Size:	6 1/2 J x 15
Wheel offset in mm:	50
Wheel load in kg:	600

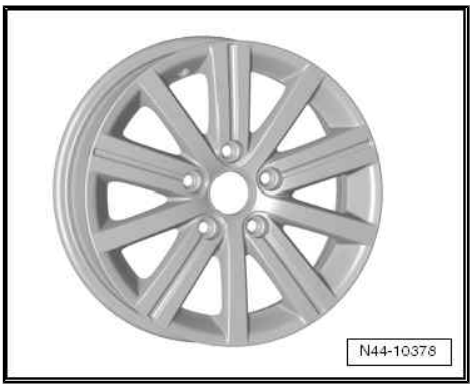

Protected by copyright. Copying for private or commercial purposes, in part or in whole, is not permitted unless authorised by Volkswagen AG. Volkswagen AG does not guarantee or accept any liability with respect to the correctness of information in this document. Copyright by Volkswagen AG.
satelettronica

1K0 601 025 A - Wheel and tyre combination ⇒ page 359

Size:	$6^1/_2$ J x 15
Wheel offset in mm:	50
Wheel load in kg:	600

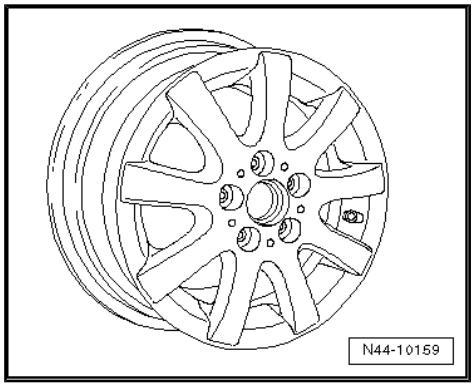

1K0 601 025 AK - Wheel and tyre combination ⇒ page 359

Size:	$6^1/_2$ J x 15
Wheel offset in mm:	50
Wheel load in kg:	600

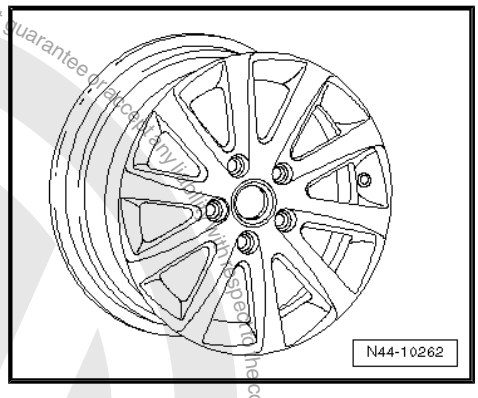

1K0 601 025 AQ - Wheel and tyre combination ⇒ page 359

Size:	$6^1/_2$ J x 15
Wheel offset in mm:	50
Wheel load in kg:	600

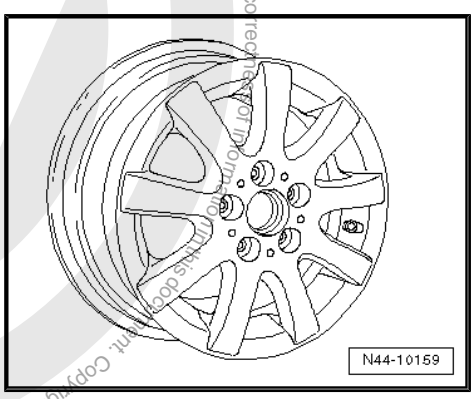

1K0 601 025 CA - Wheel and tyre combination ⇒ page 359

Size:	$6^1/_2$ J x 15
Wheel offset in mm:	50
Wheel load in kg:	600

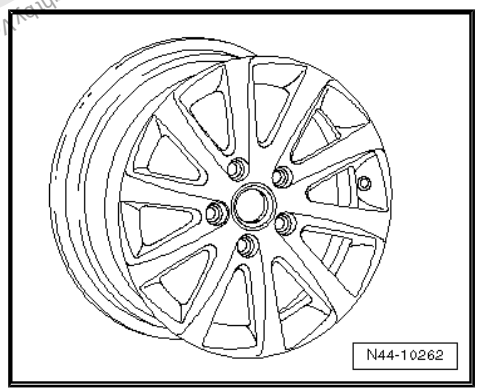

41.4.3 6 J x 16

Caution

Observe the allocation of wheels and tyres to the respective engines, which are listed in the overview table ⇒ page 358 *.*

Protected by copyright. Copyright for private or commercial purposes, in part or in whole, is not permitted unless authorised by Volkswagen AG. Volkswagen AG does not guarantee or accept any liability with respect to the correctness of information in this document. Copyright by Volkswagen AG.
satelettronica

Winter wheels

8P0 601 027 - Wheel and tyre combination ⇒ page 359

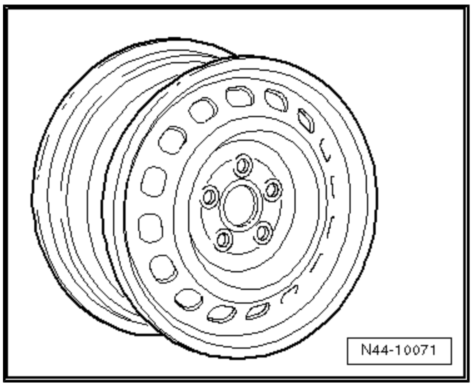

Size:	6 J x 16
Wheel offset in mm:	50
Wheel load in kg:	600

Use the following wheel bolt caps for wheel bolts:

- 1K0.601.173 (4 per wheel)
- 1K0.601.173.A (1 per wheel)

1K0 601 025 Q - Wheel and tyre combination ⇒ page 359

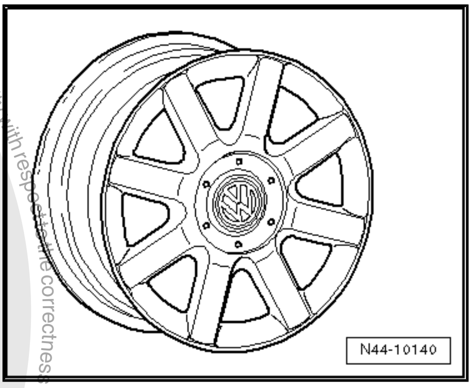

Size:	6 J x 16 EH2 ⇒ page 59
Wheel offset in mm:	50
Wheel load in kg:	615

41.4.4 $6^{1}/_{2}$ J x 16

> **Caution**
>
> *Observe the allocation of wheels and tyres to the respective engines, which are listed in the overview table ⇒ page 358 .*

5K0 601 027 - Wheel and tyre combination ⇒ page 359

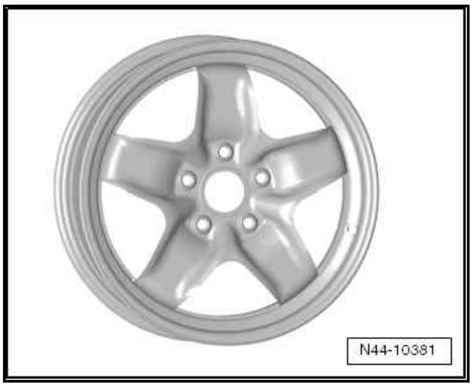

Size:	$6^{1}/_{2}$ J x 16
Wheel offset in mm:	50
Wheel load in kg:	615

Protected by copyright. Copying for private or commercial purposes, in part or in whole, is not permitted unless authorised by Volkswagen AG. Volkswagen AG does not guarantee or accept any liability with respect to the correctness of information in this document. Copyright by Volkswagen AG.

satelettronica

5K0 601 025 E - Wheel and tyre combination ⇒ page 359

Size:	$6^1/_2$ J x 16
Wheel offset in mm:	50
Wheel load in kg:	615

5K0 601 025 S - Wheel and tyre combination ⇒ page 359

Size:	$6^1/_2$ J x 16
Wheel offset in mm:	50
Wheel load in kg:	615

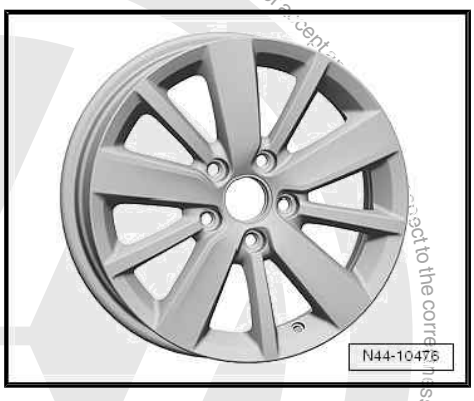

1K0 601 027 A, 1K0 601 027 AK - Wheel and tyre combination ⇒ page 359

Size:	$6^1/_2$ J x 16
Wheel offset in mm:	50
Wheel load in kg:	615

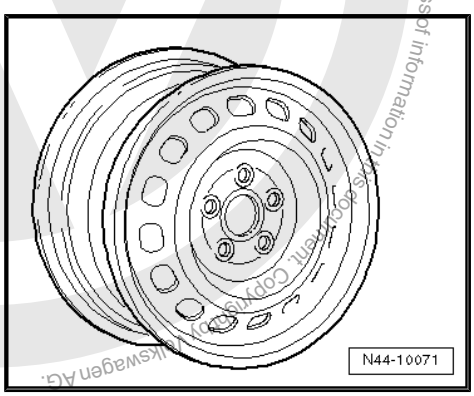

1K0 601 027 J, 1K0 601 027 K - Wheel and tyre combination ⇒ page 359

Size:	$6^1/_2$ J x 16
Wheel offset in mm:	50
Wheel load in kg:	615

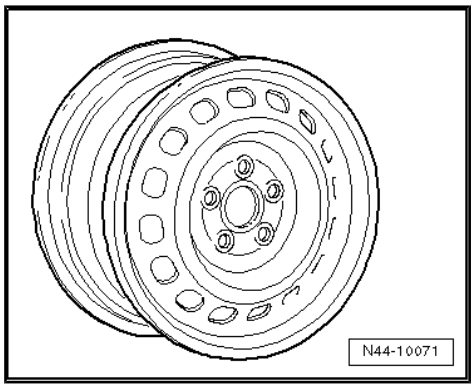

Protected by copyright. Copying for private or commercial purposes, in part or in whole, is not permitted unless authorised by Volkswagen AG. Volkswagen AG does not guarantee or accept any liability with respect to the correctness of information in this document. Copyright by Volkswagen AG.

satelettronica

1K0 601 025 AJ - Wheel and tyre combination ⇒ page 359

Size:	$6^1/_2$ J x 16
Wheel offset in mm:	50
Wheel load in kg:	615

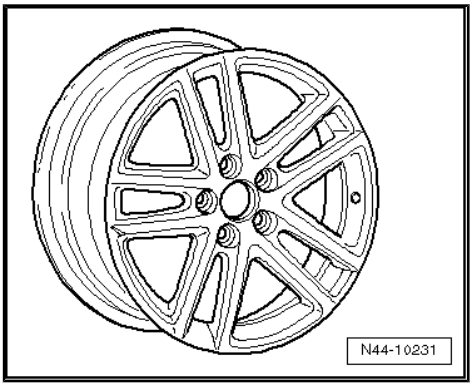

1K0 601 025 BC - Wheel and tyre combination ⇒ page 359

Size:	$6^1/_2$ J x 16
Wheel offset in mm:	50
Wheel load in kg:	615

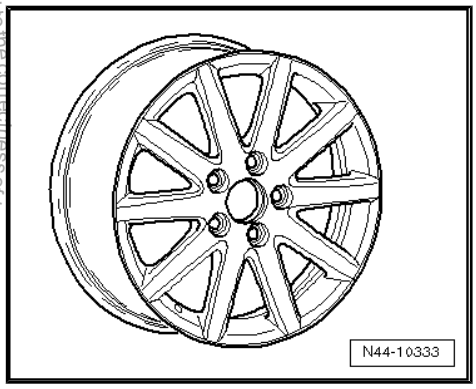

1K0 601 025 BM - Wheel and tyre combination ⇒ page 359

Size:	$6^1/_2$ J x 16
Wheel offset in mm:	50
Wheel load in kg:	615

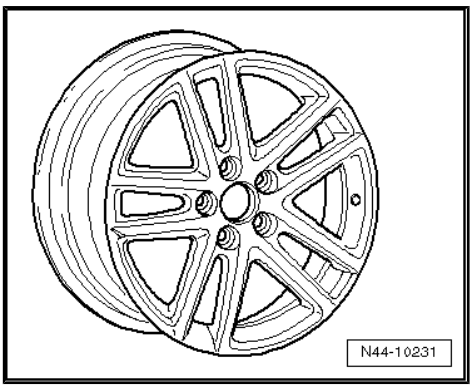

1K0 601 025 BR - Wheel and tyre combination ⇒ page 359

Size:	$6^1/_2$ J x 16
Wheel offset in mm:	50
Wheel load in kg:	615

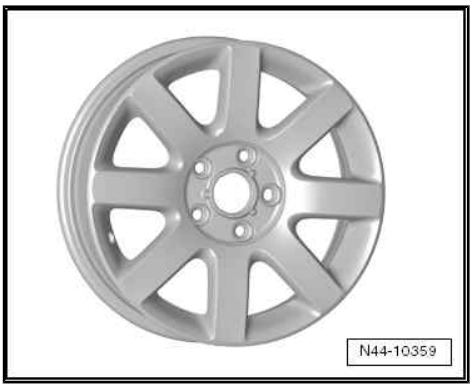

Protected by copyright. Copyright by Volkswagen AG. Volkswagen AG does not guarantee or accept any liability with respect to the correctness of information in this document. Copying for private or commercial purposes, in part or in whole, is not permitted unless authorised by Volkswagen AG.
satelettronica

1K0 601 025 BS, 1K0 601 025 CH - Wheel and tyre combination ⇒ page 359

Size:	$6^1/_2$ J x 16
Wheel offset in mm:	50
Wheel load in kg:	615

1K0 601 025 CB - Wheel and tyre combination ⇒ page 359

Size:	$6^1/_2$ J x 16
Wheel offset in mm:	50
Wheel load in kg:	615

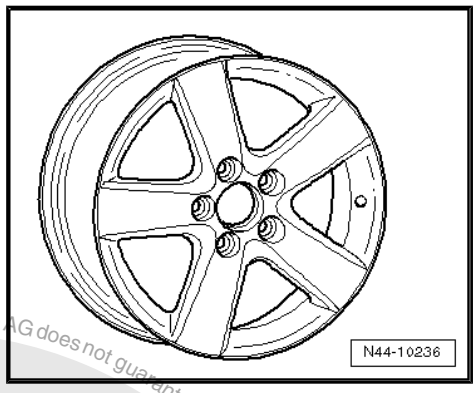

1K0 601 025 CG - Wheel and tyre combination ⇒ page 359

Size:	$6^1/_2$ J x 16
Wheel offset in mm:	50
Wheel load in kg:	615

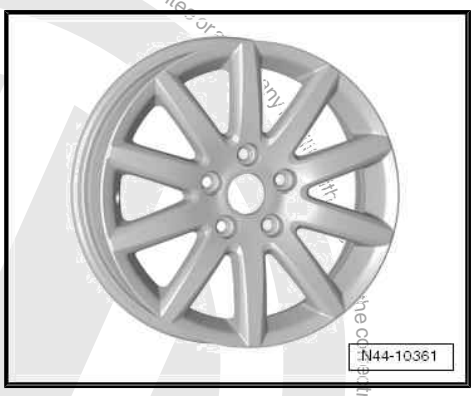

1T0 601 025 C - Wheel and tyre combination ⇒ page 359

Size:	$6^1/_2$ J x 16
Wheel offset in mm:	50
Wheel load in kg:	615

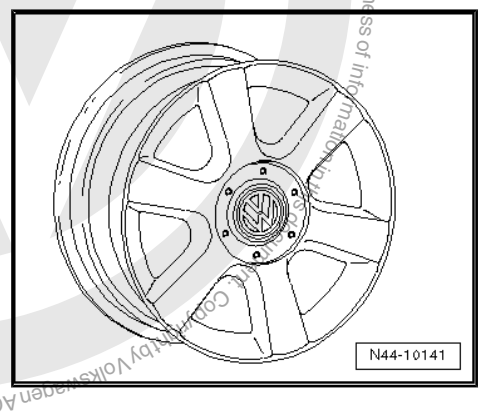

Protected by copyright. Copying for private or commercial purposes, in part or in whole, is not permitted unless authorised by Volkswagen AG. Volkswagen AG does not guarantee or assume any liability with respect to the correctness of information. Copyright by Volkswagen AG.
satelettronica

1K0 601 025 F - Wheel and tyre combination ⇒ page 359

Size:	$6^1/_2$ J x 16
Wheel offset in mm:	50
Wheel load in kg:	615

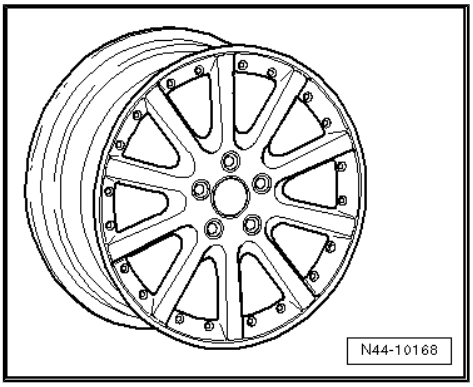

1K0 601 025 P - Wheel and tyre combination ⇒ page 359

Size:	$6^1/_2$ J x 16
Wheel offset in mm:	50
Wheel load in kg:	615

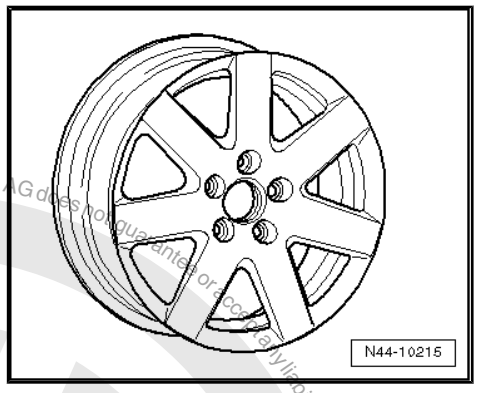

1K0 601 025 R - Wheel and tyre combination ⇒ page 359

Size:	$6^1/_2$ J x 16
Wheel offset in mm:	50
Wheel load in kg:	615

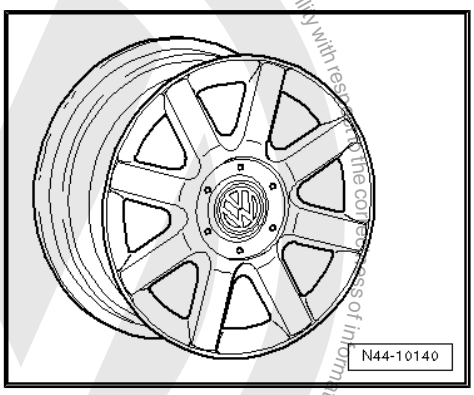

1T0 601 025 G, 1T0 601 025 K - Wheel and tyre combination ⇒ page 359

Size:	$6^1/_2$ J x 16
Wheel offset in mm:	50
Wheel load in kg:	615

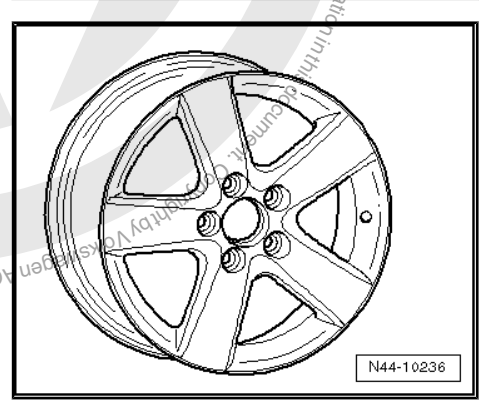

Protected by copyright. Copying for private or commercial purposes, in part or in whole, is not permitted unless authorised by Volkswagen AG. Volkswagen AG does not guarantee or accept any liability with respect to the correctness of information in this document. Copyright by Volkswagen AG.
satelettronica

1T0 601 025 M - Wheel and tyre combination ⇒ page 359

Size:	$6^1/_2$ J x 16
Wheel offset in mm:	50
Wheel load in kg:	615

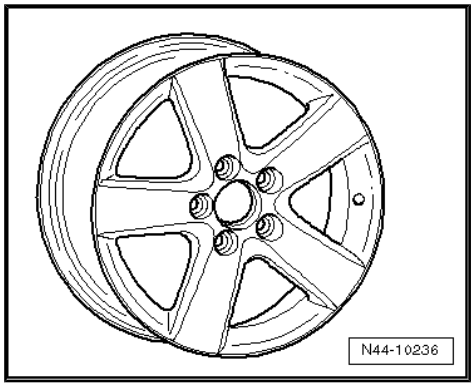

1T0 601 025 R - Wheel and tyre combination ⇒ page 359

Size:	$6^1/_2$ J x 16
Wheel offset in mm:	50
Wheel load in kg:	615

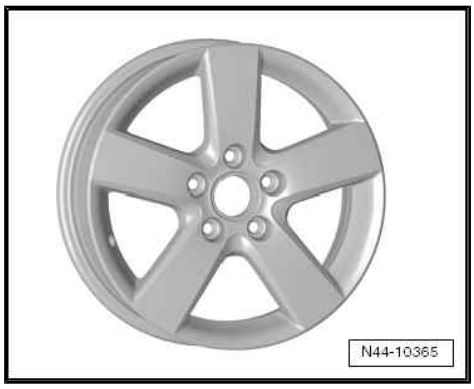

41.4.5 7 J x 17

Caution

Observe the allocation of wheels and tyres to the respective engines, which are listed in the overview table ⇒ page 358.

5K0 601 025 D - Wheel and tyre combination ⇒ page 359

Size:	7 J x 17
Wheel offset in mm:	54
Wheel load in kg:	615

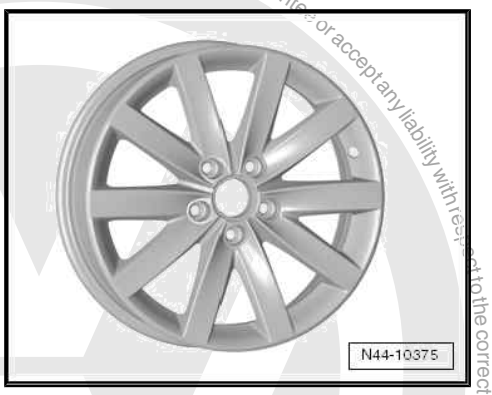

5K0 601 025 F - Wheel and tyre combination ⇒ page 359

Size:	7 J x 17
Wheel offset in mm:	54
Wheel load in kg:	615

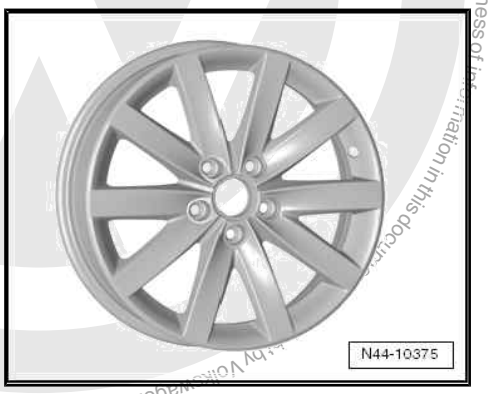

Protected by copyright. Copying for private or commercial purposes, in part or in whole, is not permitted unless authorised by Volkswagen AG. Volkswagen AG does not guarantee or accept any liability with respect to the correctness of information in this document. © Copyright by Volkswagen AG.

satelettronica

5K0 601 025 K - Wheel and tyre combination ⇒ page 359

Size:	7 J x 17
Wheel offset in mm:	54
Wheel load in kg:	615

5K0 601 025 Q, 5K0 601 025 R - Wheel and tyre combination ⇒ page 359

Size:	7 J x 17
Wheel offset in mm:	54
Wheel load in kg:	615

5K0 601 025 AA - Wheel and tyre combination ⇒ page 359

Size:	7 J x 17
Wheel offset in mm:	54
Wheel load in kg:	615

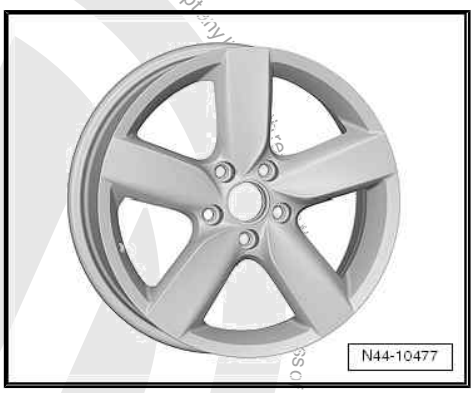

1K0 601 025 B - Wheel and tyre combination ⇒ page 359

Size:	7 J x 17
Wheel offset in mm:	54
Wheel load in kg:	615

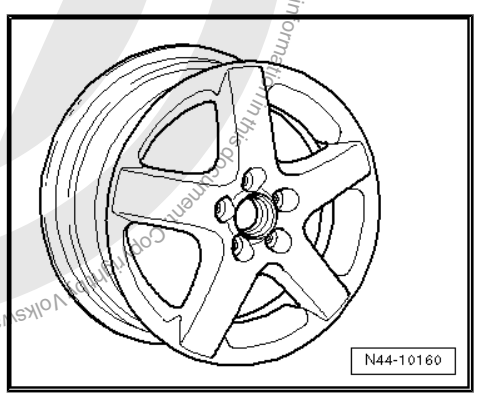

Protected by copyright. Copying for private or commercial purposes, in part or in whole, is not permitted unless authorised by Volkswagen AG. Volkswagen AG does not guarantee or accept any liability with respect to the correctness of information in this document. Copyright by Volkswagen AG.
satelettronica

1K0 601 025 C - Wheel and tyre combination ⇒ page 359

Size:	7 J x 17
Wheel offset in mm:	54
Wheel load in kg:	615

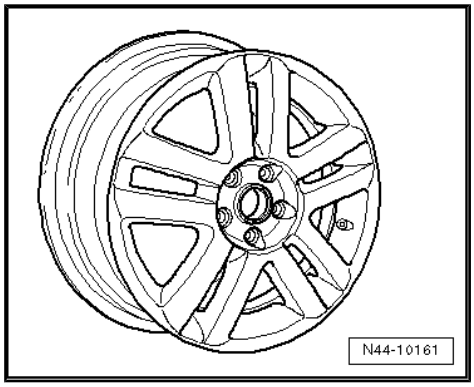

1K0 601 025 J - Wheel and tyre combination ⇒ page 359

Size:	7 J x 17
Wheel offset in mm:	54
Wheel load in kg:	615

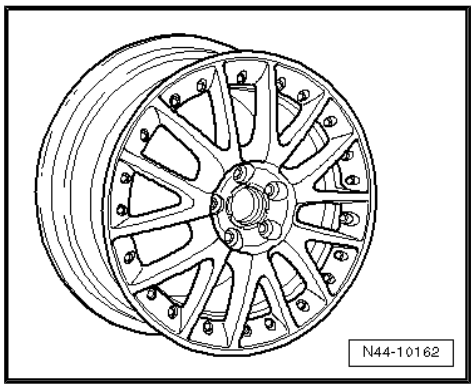

1K0 601 025 K - Wheel and tyre combination ⇒ page 359

Size:	7 J x 17
Wheel offset in mm:	54
Wheel load in kg:	615

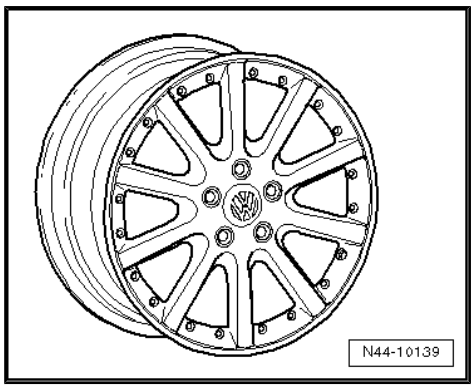

1K0 601 025 M - Wheel and tyre combination ⇒ page 359

Size:	7 J x 17
Wheel offset in mm:	54
Wheel load in kg:	615

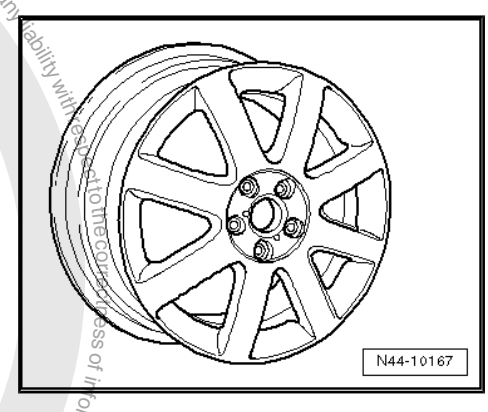

Protected by copyright. Copying for private or commercial purposes, in part or in whole, is not permitted unless authorised by Volkswagen AG. Volkswagen AG does not guarantee or accept any liability with respect to the correctness of information in this document. Copyright by Volkswagen AG.

satelettronica

1K0 601 025 T - Wheel and tyre combination ⇒ page 359

Size:	7 J x 17
Wheel offset in mm:	54
Wheel load in kg:	615

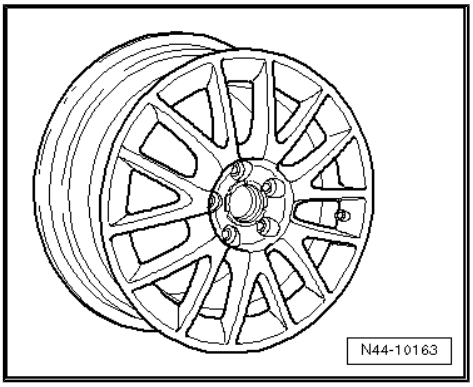

1K0 601 025 AF - Wheel and tyre combination ⇒ page 359

Size:	7 J x 17
Wheel offset in mm:	54
Wheel load in kg:	630

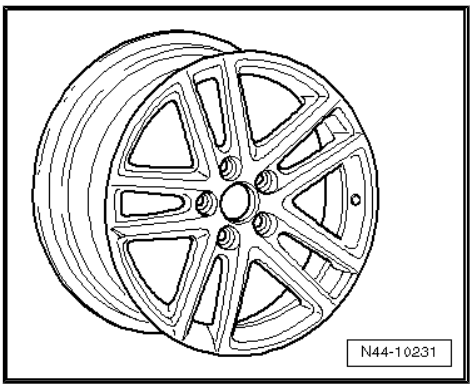

1K0 601 025 AE - Wheel and tyre combination ⇒ page 359

Size:	7 J x 17
Wheel offset in mm:	54
Wheel load in kg:	630

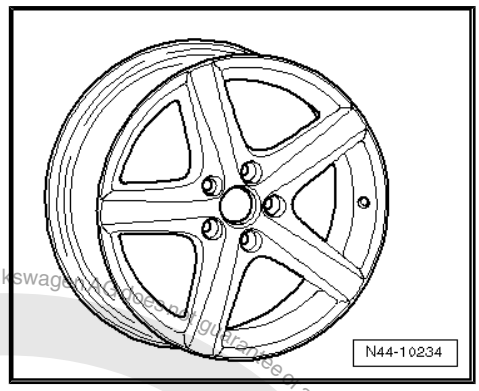

1K0 601 025 AN - Wheel and tyre combination ⇒ page 359

Size:	7 J x 17
Wheel offset in mm:	54
Wheel load in kg:	615

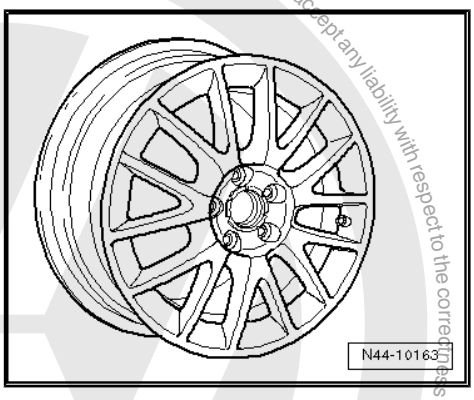

41.4.6 7 1/2 J x 17

Caution

Observe the allocation of wheels and tyres to the respective engines, which are listed in the overview table ⇒ page 358 *.*

Protected by copyright. Copying for private or commercial purposes, in part or in whole, is not permitted unless authorised by Volkswagen AG. Volkswagen AG does not guarantee or accept any liability with respect to the correctness of information in this document. Copyright by Volkswagen AG.
satelettronica

5K0 601 025 N - Wheel and tyre combination ⇒ page 363

Only vehicles with sports running gear

Size:	$7^1/_2$ J x 17
Wheel offset in mm:	51
Wheel load in kg:	630

1K0 601 025 AC - Wheel and tyre combination ⇒ page 363

Only vehicles with sports running gear

Size:	$7^1/_2$ J x 17
Wheel offset in mm:	51
Wheel load in kg:	615

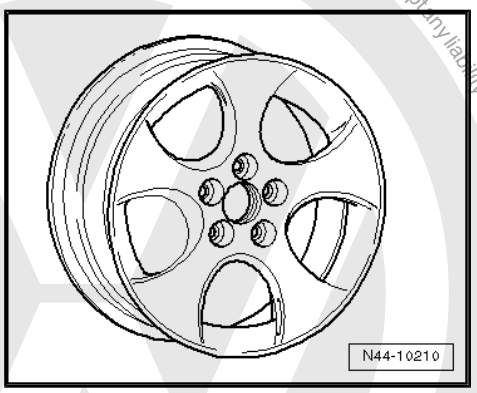

1K0 601 025 BB - Wheel and tyre combination ⇒ page 363

Only vehicles with sports running gear

Size:	$7^1/_2$ J x 17
Wheel offset in mm:	51
Wheel load in kg:	615

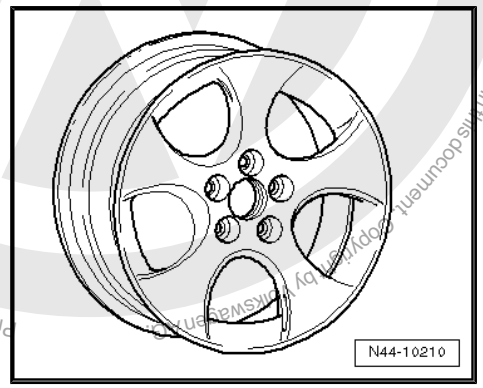

1K0 601 025 BK - Wheel and tyre combination ⇒ page 363

Only vehicles with sports running gear

Size:	$7^1/_2$ J x 17
Wheel offset in mm:	51
Wheel load in kg:	615

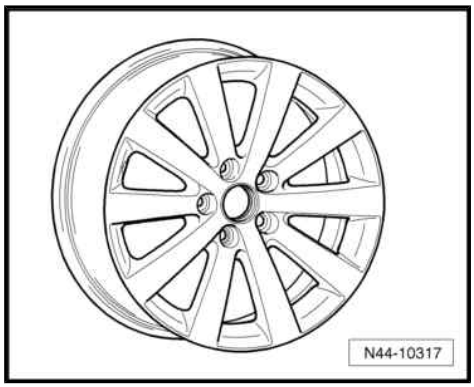

41.4.7 $7^1/_2$ J x 18

Caution

Observe the allocation of wheels and tyres to the respective engines, which are listed in the overview table ⇒ page 358 *.*

Protected by copyright. Copying for private or commercial purposes, in part or in whole, is not permitted unless authorised by Volkswagen AG. Volkswagen AG does not accept any liability with respect to the correctness of information in this document.
satelettronica

Caution

$7^1/_2$ J x 18 wheels can only be fitted under the following conditions:

- *Wheel housing extensions (flaps) ⇒ page 4 must be fitted on the rear axle ⇒ Electronic parts catalogue "ETKA" - with the exception of Germany, where trims may be left off with TÜV examination No. 3417/05.*

5K0 601 025 H - Wheel and tyre combination ⇒ page 359

Only for vehicles with sports running gear and rear axle camber of -1°45'

Size:	$7^1/_2$ J x 18
Wheel offset in mm:	51
Wheel load in kg:	630

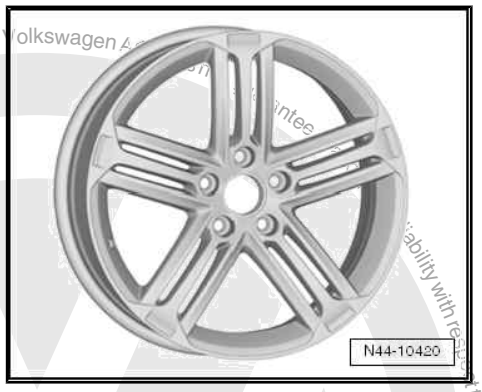

5K0 601 025 L - Wheel and tyre combination ⇒ page 359

Only for vehicles with sports running gear and rear axle camber of -1°45'

Size:	$7^1/_2$ J x 18
Wheel offset in mm:	51
Wheel load in kg:	615

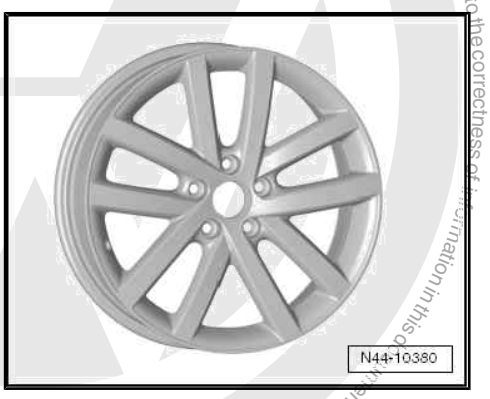

5K0 601 025 P - Wheel and tyre combination ⇒ page 359

Only for vehicles with sports running gear and rear axle camber of -1°45'

Size:	$7^1/_2$ J x 18
Wheel offset in mm:	51
Wheel load in kg:	630

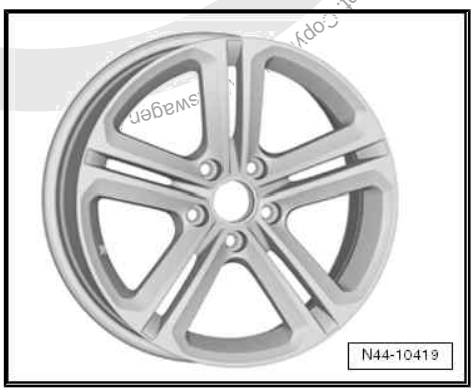

Protected by copyright. Copying for private or commercial purposes, in part or in whole, is not permitted unless authorised by Volkswagen AG. Volkswagen AG does not guarantee or assume any liability with regard to the correctness of the information in this document.
satelettronica

5K0 601 025 AC - Wheel and tyre combination ⇒ page 359

Only for vehicles with sports running gear and rear axle camber of -1°45'

Size:	$7^1/_2$ J x 18
Wheel offset in mm:	51
Wheel load in kg:	630

1K0 601 025 AD - Wheel and tyre combination ⇒ page 359

Only for vehicles with sports running gear and rear axle camber of -1°45'

Size:	$7^1/_2$ J x 18
Wheel offset in mm:	51
Wheel load in kg:	630

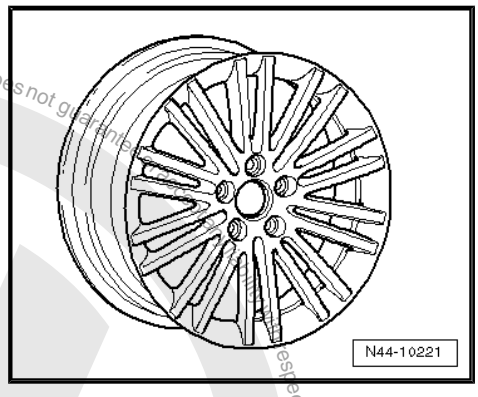

1K0 601 025 AG - Wheel and tyre combination ⇒ page 359

Only for vehicles with sports running gear and rear axle camber of -1°45'

Size:	$7^1/_2$ J x 18
Wheel offset in mm:	51
Wheel load in kg:	630

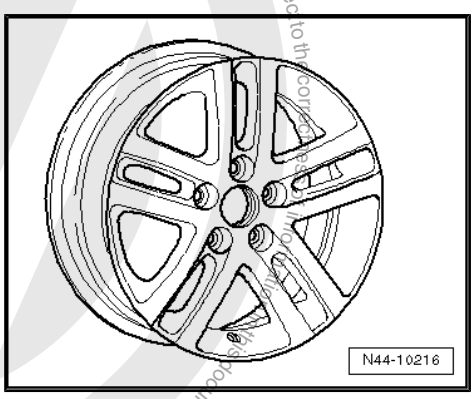

1K0 601 025 AH - Wheel and tyre combination ⇒ page 359

Only for vehicles with sports running gear and rear axle camber of -1°45'

Size:	$7^1/_2$ J x 18
Wheel offset in mm:	51
Wheel load in kg:	615

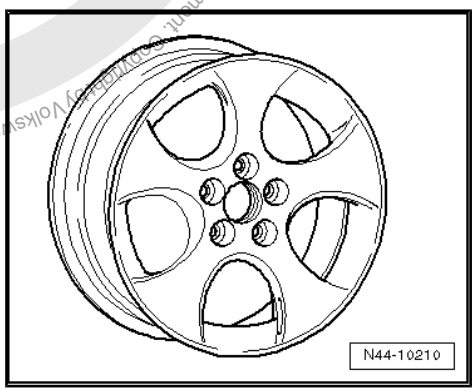

satelettronica

1K0 601 025 AM - Wheel and tyre combination ⇒ page 359

Only for vehicles with sports running gear and rear axle camber of -1°45'

Size:	$7^1/_2$ J x 18
Wheel offset in mm:	51
Wheel load in kg:	615

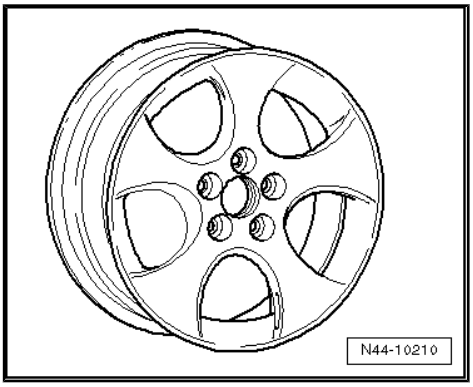

1K0 601 025 AT, 1K0 601 025 CC - Wheel and tyre combination ⇒ page 359

Only for vehicles with sports running gear and rear axle camber of -1°45'

Size:	$7^1/_2$ J x 18
Wheel offset in mm:	51
Wheel load in kg:	615

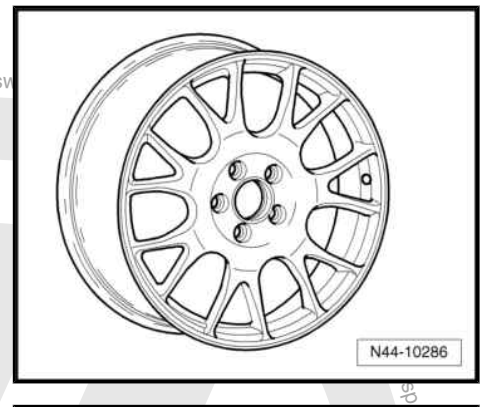

1K0 601 025 BA - Wheel and tyre combination ⇒ page 359

Only for vehicles with sports running gear and rear axle camber of -1°45'

Size:	$7^1/_2$ J x 18
Wheel offset in mm:	51
Wheel load in kg:	615

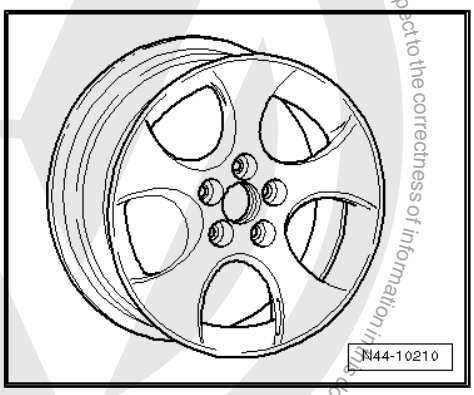

1K0 601 025 BE - Wheel and tyre combination ⇒ page 359

Only for vehicles with sports running gear and rear axle camber of -1°45'

Size:	$7^1/_2$ J x 18
Wheel offset in mm:	51
Wheel load in kg:	615

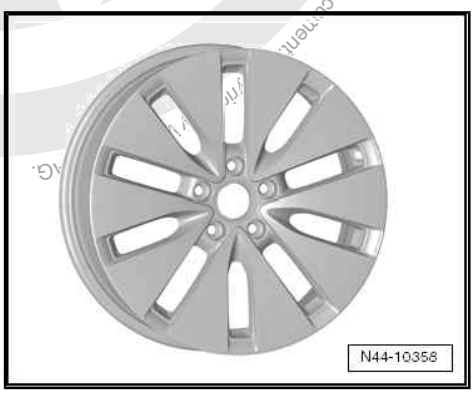

Publication by copyright. Copying for private or commercial purposes, in part or in whole, is not permitted unless authorised by Volkswagen AG. Volkswagen AG does not guarantee or assume any liability with respect to the correctness of information in this document.
satelettronica

1K0 601 025 BL - Wheel and tyre combination ⇒ page 359

Only for vehicles with sports running gear and rear axle camber of -1°45'

Size:	7 1/2 J x 18
Wheel offset in mm:	51
Wheel load in kg:	615

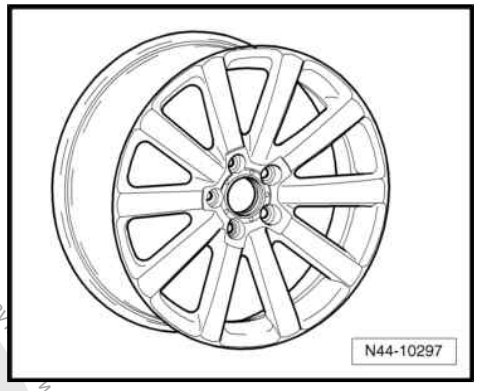

Protected by copyright. Copyright for private or commercial purposes, in part or in whole, is not permitted unless authorised by Volkswagen AG. Volkswagen AG does not guarantee or accept any liability with respect to the correctness of information in this document. Copyright by Volkswagen AG.

satelettronica

42 Jetta BlueMotion from Model year 2008

General

Volkswagen vehicles are built according to the latest findings in safety engineering. To keep it that way, we recommend the use of only genuine Volkswagen spare parts. You can recognise this by the VW Audi logo and by the part number. It has been established that these parts are reliable, safe and suitable.

Despite constant appraisal of the market, we cannot assess other products on these points, even when in isolated cases they have been passed by official inspectors or have been granted official approval. Therefore, we cannot, of course, assume any liability if these products are installed.

> ⚠ **WARNING**
>
> *The products from Volkswagen genuine parts and Volkswagen genuine accessories may differ in fitting requirements, torque specifications and so on.*
>
> *Always follow the respective fitting and operating instructions.*

The wheel and tyre combinations or changes listed in the vehicle tables refer exclusively to Volkswagen Genuine wheels. Approval of wheel and tyre combinations or a change to wheels from the accessories trade is not possible with the certificate statement attached here.

> ⚠ **WARNING**
>
> *The fitting instructions and torque specifications for wheels from Volkswagen genuine accessories may differ from those intended for wheels from Volkswagen genuine parts.*
>
> *Therefore, always observe the torque settings for the wheel bolts as well as the respective fitting and operating instructions.*

42.1 Jetta BlueMotion, type 1KM model year 2008 to model year 2011

Appendix for certificate statement 8106807129

The certificate statement can be found on the Volkswagen ServiceNet under Accessories/Tyres, Wheels and Tyres, Wheels and Tyres Guide.

Type Approval No.: e1*2001/116*0328*11 to e1*2001/116*0328*18

Overview

Model engine output	Tyres	Tyre size	Wheel rim	Off-set in mm	Snow chains	Remarks
1.9l 77 kW TDI diesel engine	Standard tyres	195/65 R 15 91T	6 J x 15 ⇒ page 388	47	Yes	General information on: ◆ Winter tyres ⇒ page 15 ◆ Snow chains ⇒ page 18

Protected by copyright. Copying for private or commercial purposes, in part or in whole, is not permitted unless authorised by Volkswagen AG. Volkswagen AG does not guarantee or accept any liability with respect to the correctness of information in this document. Copyright by Volkswagen AG.
satelettronica

Model engine output	Tyres	Tyre size	Wheel rim	Off-set in mm	Snow chains	Remarks
	Modification	195/65 R 15 91H/V	6 J x 15 ⇒ page 388	47	Yes	Tyre makes recommended by Volkswagen: ♦ Summer tyres ⇒ page 655 ♦ Winter tyres ⇒ page 688
		195/65 R 15 91T/H/V	6 1/2 J x 15 ⇒ page 389	50	Yes	
		205/60 R 15 91T/H/V	6 J x 15 ⇒ page 388	47	Yes	
		205/55 R 16 91T/H/V/W	6 1/2 J x 16 ⇒ page 391	50	No	
	Winter tyres	195/65 R 15 91Q/T/H	6 J x 15 ⇒ page 388	47	Yes	
		205/55 R 16 91Q/T/H	6 J x 16 ⇒ page 390	50	Yes	

Tyre pressure information is located on the tyre pressure plate on the inside of the tank flap or on the driver side B-pillar.

42.2 Wheel allocation for Jetta BlueMotion, type 1KM model year 2008 to model year 2011

Explanation of information on wheels ⇒ page 59

Torque settings for wheel bolts ⇒ Running gear, axles, steering; Rep. gr. 44 ; Torque settings for fitting wheels

Pitch circle diameter:	112 mm
Number of wheel bolt holes:	5

42.2.1 6 J x 15

Caution

Observe the allocation of wheels and tyres to the respective engines, which are listed in the overview table ⇒ page 387 .

1K0 601 027 C, 1K0 601 027 H - Wheel and tyre combination ⇒ page 387

Size:	6 J x 15
Wheel offset in mm:	47
Wheel load in kg:	615

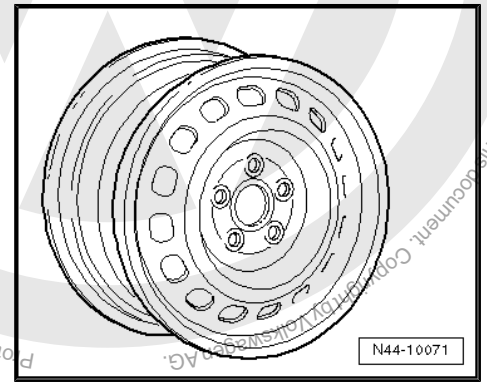

Protected by copyright. Copying for private or commercial purposes, in part or in whole, is not permitted unless authorised by Volkswagen AG. Volkswagen AG does not guarantee or accept any liability with respect to the correctness of information in this document. Copyright by Volkswagen AG.
satelettronica

1K0 601 027 T - Wheel and tyre combination ⇒ page 387

Size:	6 J x 15
Wheel offset in mm:	47
Wheel load in kg:	615

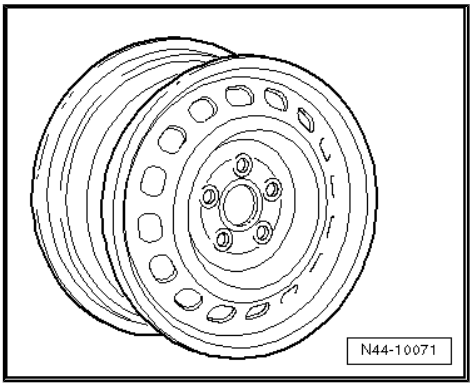

2K0 601 027 - Wheel and tyre combination ⇒ page 387

Size:	6 J x 15
Wheel offset in mm:	47
Wheel load in kg:	650

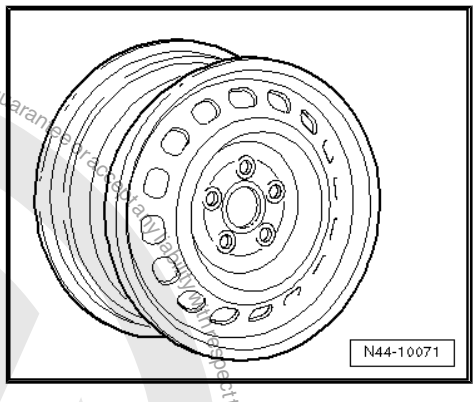

42.2.2 6 1/2 J x 15

Caution

Observe the allocation of wheels and tyres to the respective engines, which are listed in the overview table *⇒ page 387* *.*

5k0 601 025 J - Wheel and tyre combination ⇒ page 388

Size:	6 1/2 J x 15
Wheel offset in mm:	50
Wheel load in kg:	600

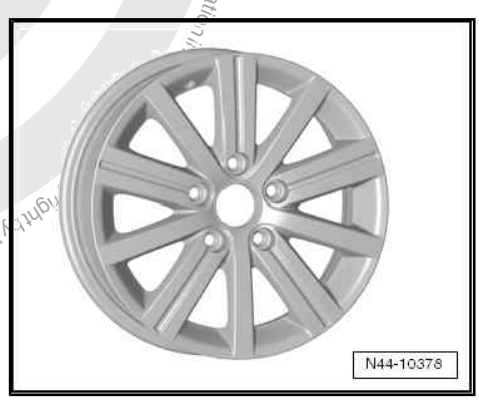

1K0 601 025 A - Wheel and tyre combination ⇒ page 388

Size:	6 1/2 J x 15
Wheel offset in mm:	50
Wheel load in kg:	600

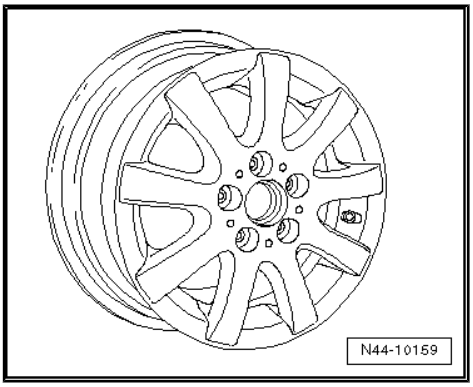

Protected by copyright. Copying for private or commercial purposes, in part or in whole, is not permitted unless authorised by Volkswagen AG. Volkswagen AG does not guarantee or accept any liability with respect to the correctness of information in this document. Copyright by Volkswagen AG.

satelettronica

1K0 601 025 AK - Wheel and tyre combination ⇒ page 388

Size:	$6^1/_2$ J x 15
Wheel offset in mm:	50
Wheel load in kg:	600

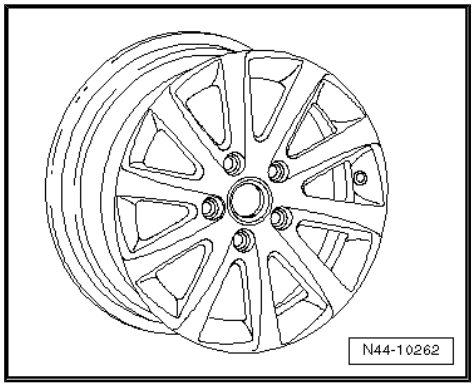

1K0 601 025 AQ - Wheel and tyre combination ⇒ page 388

Size:	$6^1/_2$ J x 15
Wheel offset in mm:	50
Wheel load in kg:	600

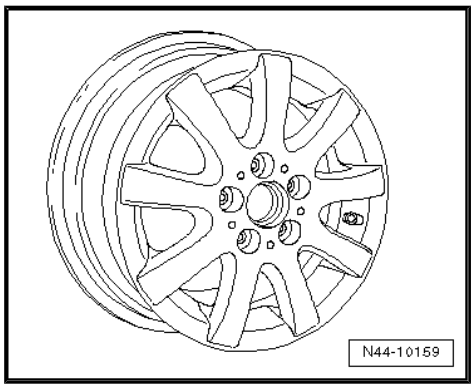

1K0 601 025 CA - Wheel and tyre combination ⇒ page 388

Size:	$6^1/_2$ J x 15
Wheel offset in mm:	50
Wheel load in kg:	600

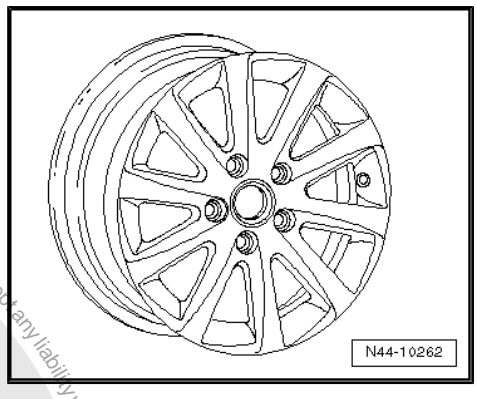

42.2.3 6 J x 16

Caution

Observe the allocation of wheels and tyres to the respective engines, which are listed in the overview table ⇒ page 387 *.*

Protected by copyright. Copying for private or commercial purposes, in part or in whole, is not permitted unless authorised by Volkswagen AG. Volkswagen AG does not guarantee or accept any liability with respect to the correctness of information in this document. Copyright by Volkswagen AG.
satelettronica

Winter wheels

8P0 601 027 - Wheel and tyre combination ⇒ page 388

Size:	6 J x 16
Wheel offset in mm:	50
Wheel load in kg:	600

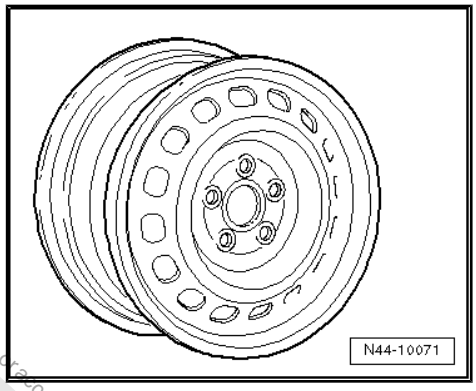

Use the following wheel bolt caps for wheel bolts:

- 1K0.601.173 (4 per wheel)
- 1K0.601.173.A (1 per wheel)

1K0 601 025 Q - Wheel and tyre combination ⇒ page 388

Size:	6 J x 16 EH2 ⇒ page 59
Wheel offset in mm:	50
Wheel load in kg:	615

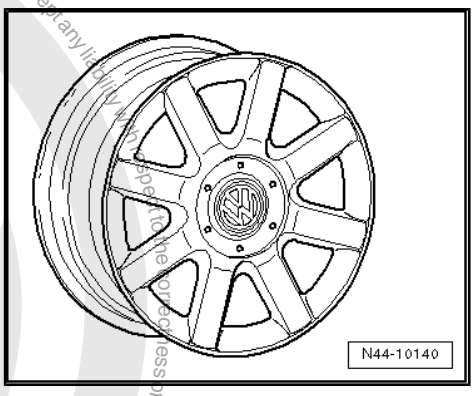

42.2.4 6 1/2 J x 16

> **Caution**
>
> *Observe the allocation of wheels and tyres to the respective engines, which are listed in the overview table* *⇒ page 387* *.*

5K0 601 027 - Wheel and tyre combination ⇒ page 388

Size:	6 1/2 J x 16
Wheel offset in mm:	50
Wheel load in kg:	615

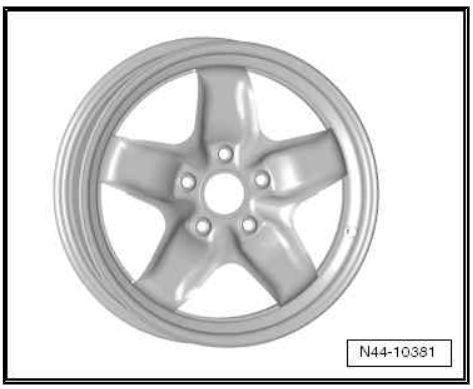

Protected by copyright. Copyright by Volkswagen AG. Volkswagen AG does not guarantee or accept any liability with respect to the correctness of information in this document. Copyright by Volkswagen AG. Copyright. Private and commercial purposes, in part or in whole, is not permitted unless authorised by Volkswagen AG.
satelettronica

5K0 601 025 E - Wheel and tyre combination ⇒ page 388

Size:	$6^1/_2$ J x 16
Wheel offset in mm:	50
Wheel load in kg:	615

5K0 601 025 S - Wheel and tyre combination ⇒ page 388

Size:	$6^1/_2$ J x 16
Wheel offset in mm:	50
Wheel load in kg:	615

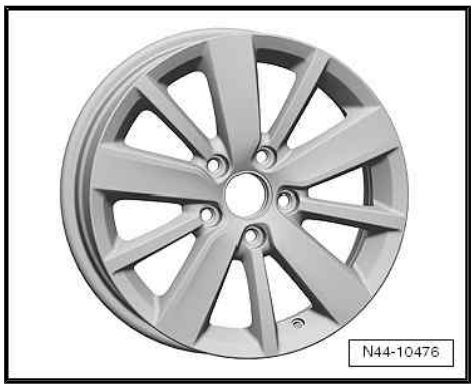

1K0 601 027 A, 1K0 601 027 AK - Wheel and tyre combination ⇒ page 388

Size:	$6^1/_2$ J x 16
Wheel offset in mm:	50
Wheel load in kg:	615

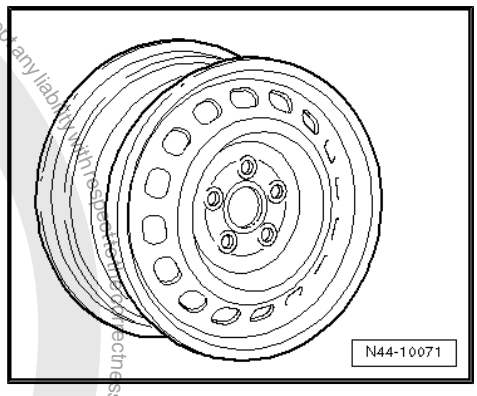

1K0 601 027 J, 1K0 601 027 K - Wheel and tyre combination ⇒ page 388

Size:	$6^1/_2$ J x 16
Wheel offset in mm:	50
Wheel load in kg:	615

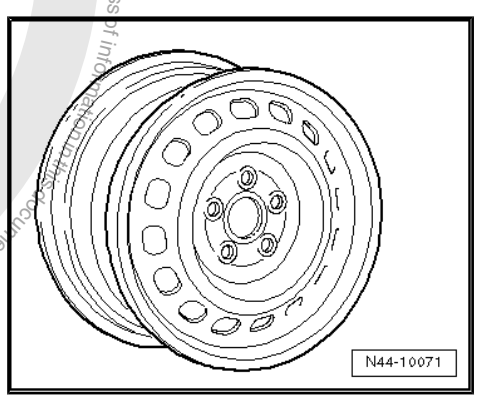

Protected by copyright. Copying for private or commercial purposes, in part or in whole, is not permitted unless authorised by Volkswagen AG. Volkswagen AG does not guarantee or accept any liability with respect to the correctness of information in this document. Copyright by Volkswagen AG.

satelettronica

1K0 601 025 AJ - Wheel and tyre combination ⇒ page 388

Size:	6 1/2 J x 16
Wheel offset in mm:	50
Wheel load in kg:	615

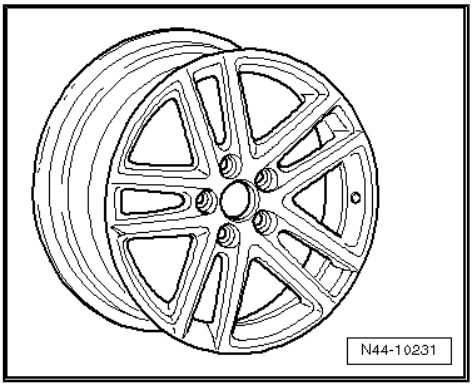

1K0 601 025 BC - Wheel and tyre combination ⇒ page 388

Size:	6 1/2 J x 16
Wheel offset in mm:	50
Wheel load in kg:	615

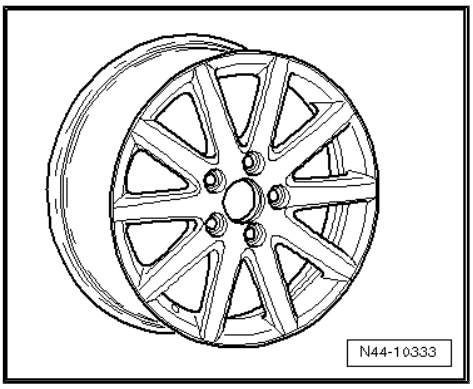

1K0 601 025 BM - Wheel and tyre combination ⇒ page 388

Size:	6 1/2 J x 16
Wheel offset in mm:	50
Wheel load in kg:	615

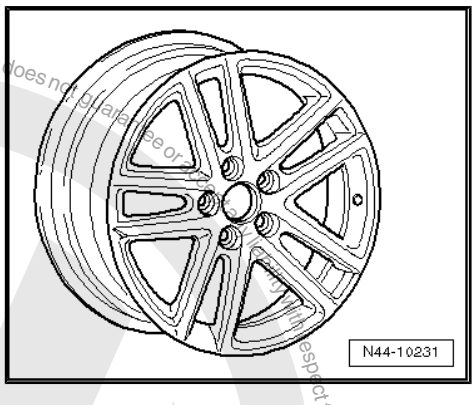

1K0 601 025 BR - Wheel and tyre combination ⇒ page 388

Size:	6 1/2 J x 16
Wheel offset in mm:	50
Wheel load in kg:	615

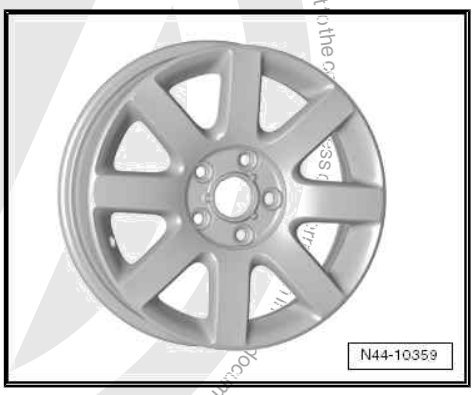

Protected by copyright. Copying for private or commercial purposes, in part or in whole, is not permitted unless authorised by Volkswagen AG. Volkswagen AG does not guarantee or assume any liability with respect to the correctness of information in this document. Copyright by Volkswagen AG.
satelettronica

1K0 601 025 BS, 1K0 601 025 CH - Wheel and tyre combination ⇒ page 388

Size:	$6^1/_2$ J x 16
Wheel offset in mm:	50
Wheel load in kg:	615

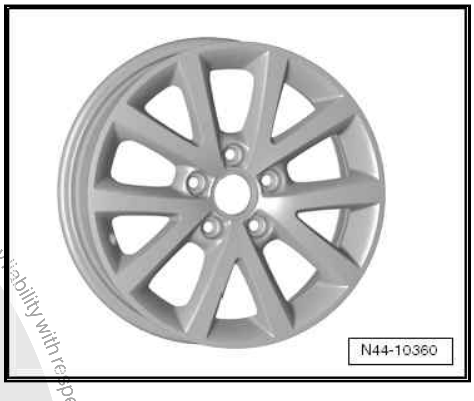

1K0 601 025 CB - Wheel and tyre combination ⇒ page 388

Size:	$6^1/_2$ J x 16
Wheel offset in mm:	50
Wheel load in kg:	615

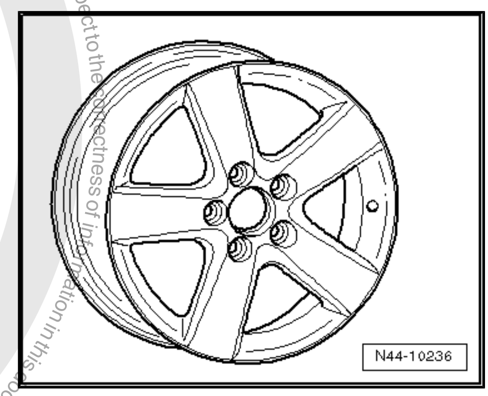

1K0 601 025 CG - Wheel and tyre combination ⇒ page 388

Size:	$6^1/_2$ J x 16
Wheel offset in mm:	50
Wheel load in kg:	615

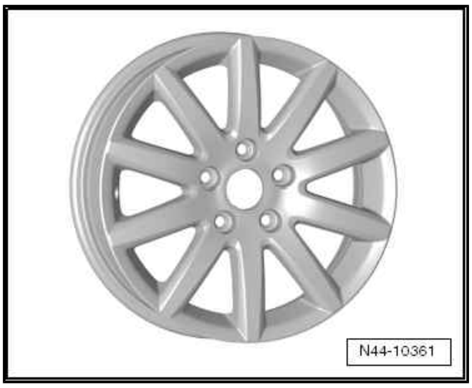

1T0 601 025 C - Wheel and tyre combination ⇒ page 388

Size:	$6^1/_2$ J x 16
Wheel offset in mm:	50
Wheel load in kg:	615

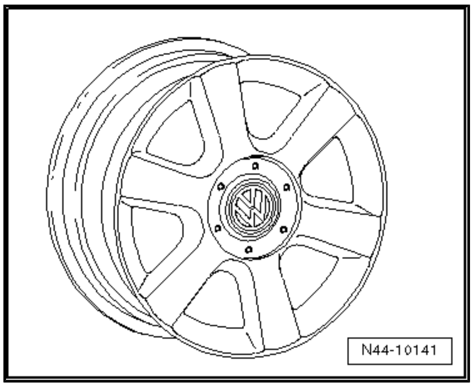

satelettronica

1K0 601 025 F - Wheel and tyre combination ⇒ page 388

Size:	$6^1/_2$ J x 16
Wheel offset in mm:	50
Wheel load in kg:	615

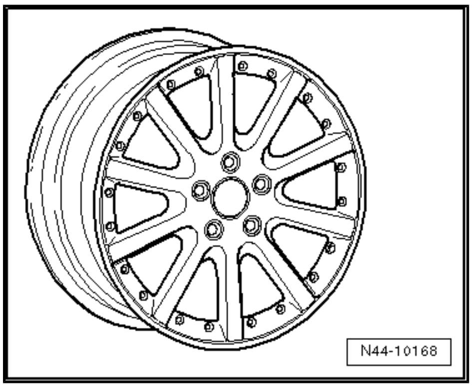

1K0 601 025 P - Wheel and tyre combination ⇒ page 388

Size:	$6^1/_2$ J x 16
Wheel offset in mm:	50
Wheel load in kg:	615

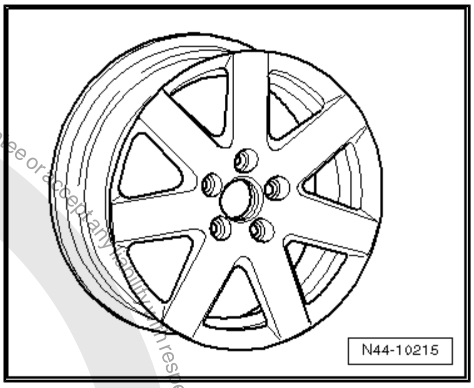

1K0 601 025 R - Wheel and tyre combination ⇒ page 388

Size:	$6^1/_2$ J x 16
Wheel offset in mm:	50
Wheel load in kg:	615

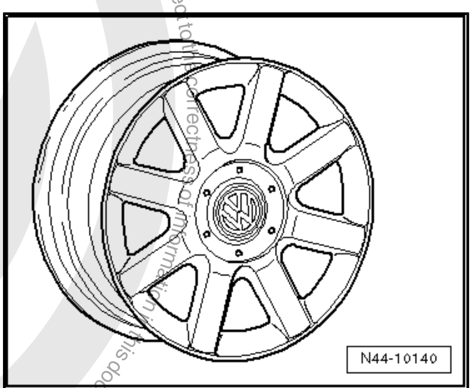

1T0 601 025 G, 1T0 601 025 K - Wheel and tyre combination ⇒ page 388

Size:	$6^1/_2$ J x 16
Wheel offset in mm:	50
Wheel load in kg:	615

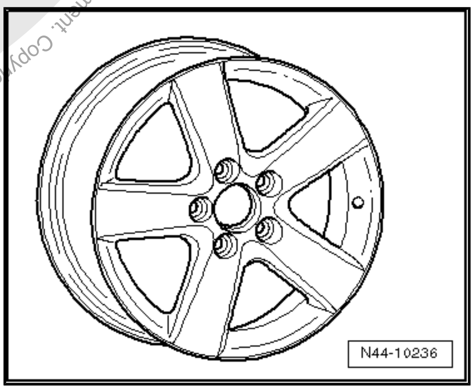

Protected by copyright. Copying for private or commercial purposes, in part or whole, is not permitted unless authorised by Volkswagen AG. Volkswagen AG does not guarantee or accept any liability with respect to the correctness of information in this document. Copyright by Volkswagen AG.
satelettronica

Protected by copyright. Copyright by Volkswagen AG. Volkswagen AG does not guarantee or accept any liability with respect to the correctness of information in this document. Copyright by Volkswagen AG. Copying for private or commercial purposes, in part or in whole, is not permitted unless authorised by Volkswagen AG.

1T0 601 025 M - Wheel and tyre combination ⇒ page 388

Size:	$6^1/_2$ J x 16
Wheel offset in mm:	50
Wheel load in kg:	615

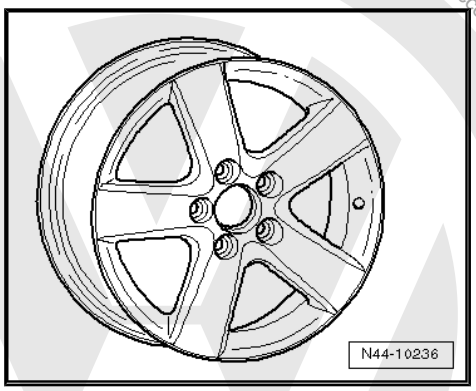

1T0 601 025 R - Wheel and tyre combination ⇒ page 388

Size:	$6^1/_2$ J x 16
Wheel offset in mm:	50
Wheel load in kg:	615

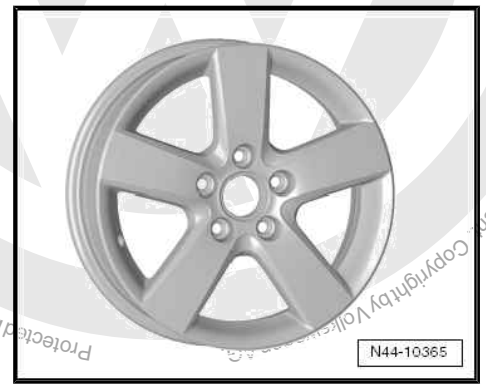

satelettronica

43 Golf cabriolet model year 1994 to model year 1997

General

Volkswagen vehicles are built according to the latest findings in safety engineering. To keep it that way, we recommend the use of only genuine Volkswagen spare parts. You can recognise this by the VW Audi logo and by the part number. It has been established that these parts are reliable, safe and suitable.

Despite constant appraisal of the market, we cannot assess other products on these points, even when in isolated cases they have been passed by official inspectors or have been granted official approval. Therefore, we cannot, of course, assume any liability if these products are installed.

WARNING

The products from Volkswagen genuine parts and Votex genuine accessories may differ in fitting requirements, torque specifications and so on.

Always follow the respective fitting and operating instructions.

The wheel and tyre combinations or changes listed in the vehicle tables refer exclusively to Volkswagen Genuine wheels. Approval of wheel and tyre combinations or a change to wheels from the accessories trade is not possible with the parts certificate attached here.

WARNING

The fitting instructions and torque specifications for wheels from Votex genuine accessories may differ from those intended for wheels from Volkswagen genuine parts.

Therefore, always observe the torque settings for the wheel bolts as well as the respective fitting and operating instructions.

43.1 Golf cabriolet type 1EX0 model year 1994 to model year 1997

Appendix 2 to Parts Certificate 1479/00

General type approval No.: G 407

Overview

Model engine output	Tyres	Tyre size	Wheel rim	Off-set in mm	Snow chains	Remarks
55 kW, 66 kW	Standard tyres	185/60 R 14 82T	6 J x 14 ⇒ page 399	43/45	Yes	205/45 R 16 83 H are only permissible if shock absorbers 1HM 513 031 B are installed on the rear axle and no equipment to lower vehicle is installed!
	Modification	185/60 R 14 82H	6 J x 14 ⇒ page 399	43/45	Yes	

Protected by copyright. Copyright by Volkswagen AG. Volkswagen AG does not guarantee or accept any liability with respect to the correctness of information in this document. Copyright by Volkswagen AG.
satelettronica

Model engine output	Tyres	Tyre size	Wheel rim	Off-set in mm	Snow chains	Remarks
		195/50 R 15 82H	6 J x 15 ⇒ page 400	45	Yes	Winter tyres 175/70 R 13 82Q are permitted only on vehicles to 12.94.
		205/45 R 16 83H	6 1/2 J x 16 ⇒ page 400	45	No	
	Winter tyres	175/65 R 14 82Q	6 J x 14 ⇒ page 399	43/45	Yes	
74 kW, 81 kW, 85 kW	Standard tyres	185/60 R 14 82H	6 J x 14 ⇒ page 399	43/45	Yes	General information on: ◆ Winter tyres ⇒ page 15 ◆ Snow chains ⇒ page 18
	Modification	185/60 R 14 82T	6 J x 14 ⇒ page 399	43/45	Yes	
		195/50 R 15 82H	6 J x 15 ⇒ page 400	45	Yes	Tyre makes recommended by Volkswagen: ◆ Summer tyres ⇒ page 643 ◆ All-season tyres ⇒ page 668 ◆ Winter tyres ⇒ page 681
		205/45 R 16 83H	6 1/2 J x 16 ⇒ page 400	45	No	
	Winter tyres	175/65 R 14 82Q	6 J x 14 ⇒ page 399	43/45	Yes	

Tyre pressures can be found on the inside of the fuel tank flap or in ⇒ Maintenance ; Booklet 35

43.2 Wheel allocation for Golf cabriolet, type 1EX0 from model year 1994 to model year 1997

Explanation of information on wheels ⇒ page 59

Torque settings for wheel bolts ⇒ Running gear; Rep. gr. 40 ; Repairing front wheel suspension (basic running gear); Removing and installing wheel bearing, strut and drive shaft (basic running gear)

Pitch circle diameter:	100 mm
Number of wheel bolt holes:	4

Copyright by Volkswagen AG. Volkswagen AG does not guarantee or accept any liability with respect to the correctness of information in this document. Copying for private or commercial purposes, in part or in whole, is not permitted unless authorised by Volkswagen AG. Protected by copyright.

satelettronica

43.2.1 6 J x 14

Caution

Observe the allocation of wheels and tyres to the respective engines, which are listed in the overview table ⇒ page 397 .

1H0 601 025 P - Wheel and tyre combination ⇒ page 397

Size:	6 J x 14
Wheel offset in mm:	45
Wheel load in kg:	460

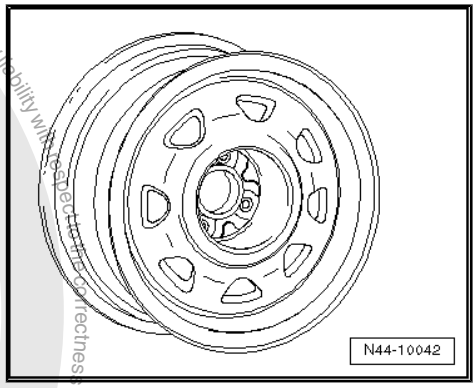

1HM 601 025 - Wheel and tyre combination ⇒ page 397

Size:	6 J x 14
Wheel offset in mm:	45
Wheel load in kg:	460

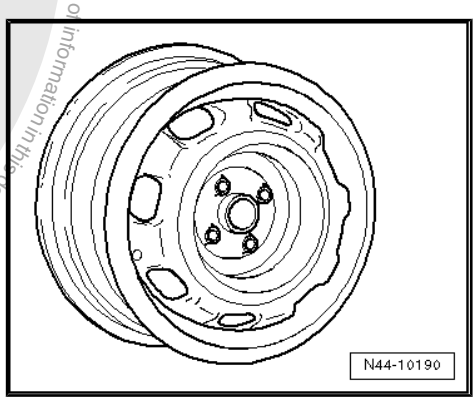

1H0 601 025 B - Wheel and tyre combination ⇒ page 397

Size:	6 J x 14
Wheel offset in mm:	45
Wheel load in kg:	460

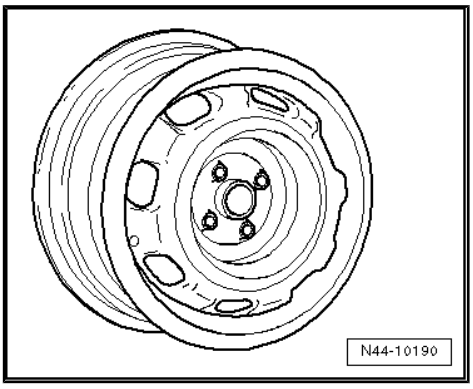

1H0 601 027 A - Wheel and tyre combination ⇒ page 397

Size:	6 J x 14
Wheel offset in mm:	43
Wheel load in kg:	500

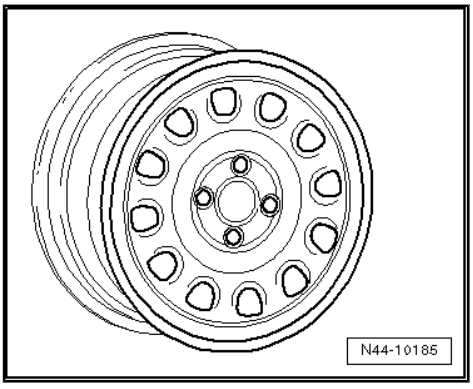

Protected by copyright. Copyright by Volkswagen AG.
Volkswagen AG. Volkswagen AG does not guarantee or accept any liability with respect to the correctness of information in this document. Copyright by Volkswagen AG. Protected by copyright. Copying for private or commercial purposes, in part or in whole, is not permitted unless authorised by Volkswagen AG.
satelettronica

1H0 601 025 R - Wheel and tyre combination ⇒ page 397

Size:	6 J x 14
Wheel offset in mm:	45
Wheel load in kg:	500

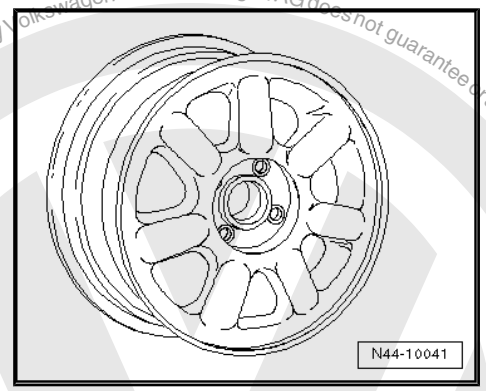

43.2.2 6 J x 15

Caution

Observe the allocation of wheels and tyres to the respective engines, which are listed in the overview table ⇒ page 397 *.*

1H0 601 025 AD - Wheel and tyre combination ⇒ page 398

Size:	6 J x 15
Wheel offset in mm:	45
Wheel load in kg:	460

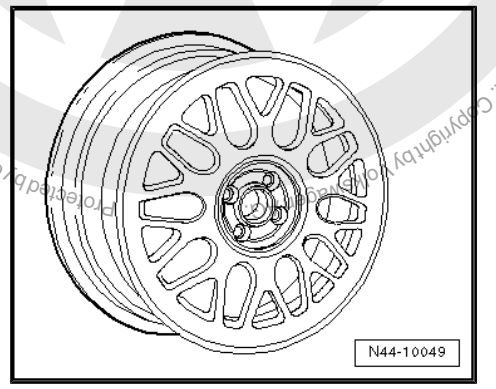

1H0 601 025 AE - Wheel and tyre combination ⇒ page 398

Size:	6 J x 15
Wheel offset in mm:	45
Wheel load in kg:	480

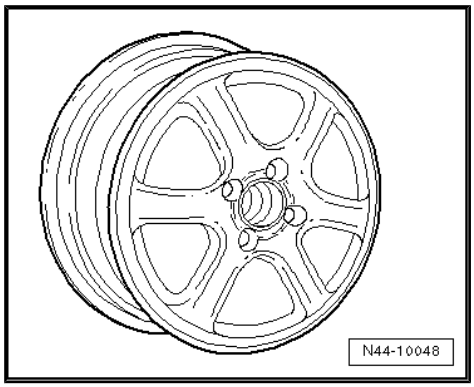

43.2.3 6 1/2 J x 16

Caution

Observe the allocation of wheels and tyres to the respective engines, which are listed in the overview table ⇒ page 397 *.*

Protected by copyright. Copyright by Volkswagen AG. Volkswagen AG does not guarantee or accept any liability with respect to the correctness of information in this document. Copying for private or commercial purposes, in part or in whole, is not permitted unless authorised by Volkswagen AG.
satelettronica

1H0 601 025 AJ - Wheel and tyre combination ⇒ page 398

Size:	$6^1/_2$ J x 16
Wheel offset in mm:	45
Wheel load in kg:	480

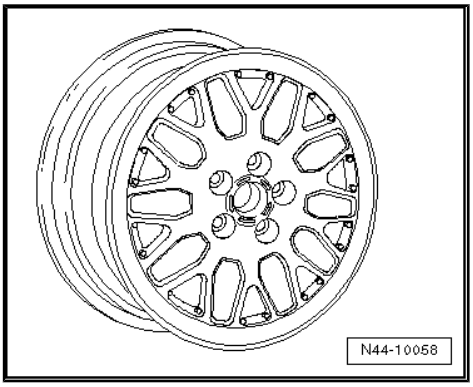

Protected by copyright. Copying for private or commercial purposes, in part or in whole, is not permitted unless authorised by Volkswagen AG. Volkswagen AG does not guarantee or accept any liability with respect to the correctness of information in this document. Copyright by Volkswagen AG.

satelettronica

44 Golf cabriolet model year 1998 to model year 2002

General

Volkswagen vehicles are built according to the latest findings in safety engineering. To keep it that way, we recommend the use of only genuine Volkswagen spare parts. You can recognise this by the VW Audi logo and by the part number. It has been established that these parts are reliable, safe and suitable.

Despite constant appraisal of the market, we cannot assess other products on these points, even when in isolated cases they have been passed by official inspectors or have been granted official approval. Therefore, we cannot, of course, assume any liability if these products are installed.

> ⚠ **WARNING**
>
> *The products from Volkswagen genuine parts and Votex genuine accessories may differ in fitting requirements, torque specifications and so on.*
>
> *Always follow the respective fitting and operating instructions.*

The wheel and tyre combinations or changes listed in the vehicle tables refer exclusively to Volkswagen Genuine wheels. Approval of wheel and tyre combinations or a change to wheels from the accessories trade is not possible with the parts certificate attached here.

> ⚠ **WARNING**
>
> *The fitting instructions and torque specifications for wheels from Votex genuine accessories may differ from those intended for wheels from Volkswagen genuine parts.*
>
> *Therefore, always observe the torque settings for the wheel bolts as well as the respective fitting and operating instructions.*

Protected by copyright. Copying for private or commercial purposes, in part or in whole, is not permitted unless authorised by Volkswagen AG. Volkswagen AG does not guarantee or accept any liability with respect to the correctness of information in this document. Copyright by Volkswagen AG.

44.1 Golf cabriolet; type 1E from model year 1998 to model year 2002

Appendix 2 to Parts Certificate 1486/03

Type Approval No. cabriolet: e1*96/79*0070*00 to e1*96/79*0070*04

Type Approval No. Cabriolet: e1*98/14*0070*05 to e1*98/14*0070*10

Overview

Model engine output	Tyres	Tyre size	Wheel rim	Off-set in mm	Snow chains	Remarks
55 kW petrol engine; 66 kW TDI	Standard tyres	185/60 R 14 82T	6 J x 14 ⇒ page 403	43/45	Yes	General information on: ◆ Winter tyres ⇒ page 15 ◆ Snow chains ⇒ page 18

satelettronica

Model engine output	Tyres	Tyre size	Wheel rim	Off-set in mm	Snow chains	Remarks
	Modification	195/50 R 15 82H	6 J x 15 ⇒ page 405	43/45	Yes	Tyre makes recommended by Volkswagen: ◆ Summer tyres ⇒ page 656 ◆ All-season tyres ⇒ page 672 ◆ Winter tyres ⇒ page 688
		205/45 R 16 83H	6 1/2 J x 16 ⇒ page 407	45	No	
	Winter tyres	175/65 R 14 82Q	6 J x 14 ⇒ page 403	43/45	Yes	205/45 R 16 83H are permitted only if: ◆ shock absorbers 1HM 513 031 B are installed on the rear axle. ◆ No equipment for lowering vehicle is installed.
74 kW, 85 kW petrol engines 81 kW TDI	Standard tyres	185/60 R 14 82H	6 J x 14 ⇒ page 403	43/45	Yes	
	Modification	195/50 R 15 82H	6 J x 15 ⇒ page 405	43/45	Yes	Winter tyres 175/70 R13 82 Q are only possible on vehicles produced up to 12.94.
		205/45 R 16 83H	6 1/2 J x 16 ⇒ page 407	45	No	
	Winter tyres	175/65 R 14 82Q	6 J x 14 ⇒ page 403	43/45	Yes	

Tyre pressures can be found on the inside of the fuel tank flap or in ⇒ Maintenance ; Booklet 35

44.2 Wheel allocation for Golf cabriolet; type 1E from model year 1998 to model year 2002

Explanation of information on wheels ⇒ page 59

Specified torques for wheel bolts ⇒ Running gear; Rep. gr. 40

Pitch circle diameter: 100 mm
Number of wheel bolt holes: 4

44.2.1 6 J x 14

Caution

Observe the allocation of wheels and tyres to the respective engines, which are listed in the overview table ⇒ page 402 .

Protected by copyright. Copyright by Volkswagen AG.
Copyright by Volkswagen AG. Volkswagen AG does not guarantee or accept any liability with respect to the correctness of information in this document.
Copyright by Volkswagen AG. Volkswagen AG does not permit access to or in whole, is not permitted unless authorised by Volkswagen AG.
satelettronica

Protected by copyright. Copying for private or commercial purposes, in part or in whole, is not permitted unless authorised by Volkswagen AG. Volkswagen AG does not guarantee or accept any liability with respect to the correctness of information in this document. Copyright by Volkswagen AG.

For vehicles with maximum permitted axle load of 920 kg

1H0 601 025 P - Wheel and tyre combination ⇒ page 402

Size:	6 J x 14
Wheel offset in mm:	45
Wheel load in kg:	460

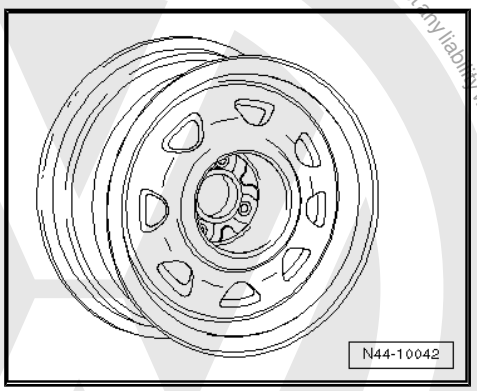

1HM 601 025 - Wheel and tyre combination ⇒ page 402

Size:	6 J x 14
Wheel offset in mm:	45
Wheel load in kg:	460

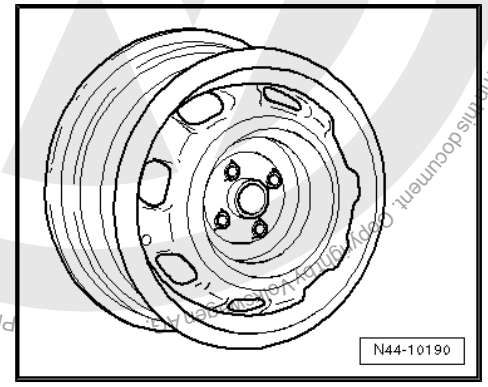

1H0 601 025 B - Wheel and tyre combination ⇒ page 402

Size:	6 J x 14
Wheel offset in mm:	45
Wheel load in kg:	460

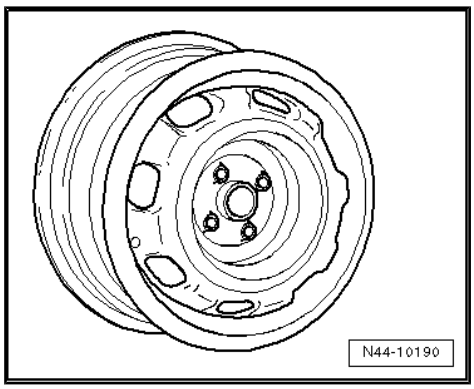

All vehicles

1H0 601 027 A - Wheel and tyre combination ⇒ page 402

Size:	6 J x 14
Wheel offset in mm:	43
Wheel load in kg:	500

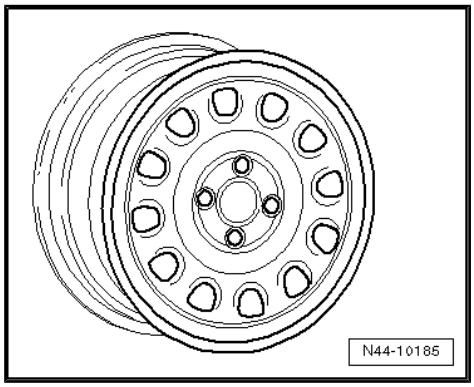

satelettronica

1H0 601 027 - Wheel and tyre combination ⇒ page 402

Size:	6 J x 14
Wheel offset in mm:	45
Wheel load in kg:	500

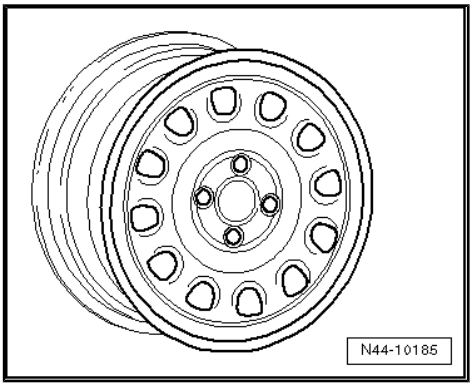

1H0 601 025 R - Wheel and tyre combination ⇒ page 402

Size:	6 J x 14
Wheel offset in mm:	45
Wheel load in kg:	500

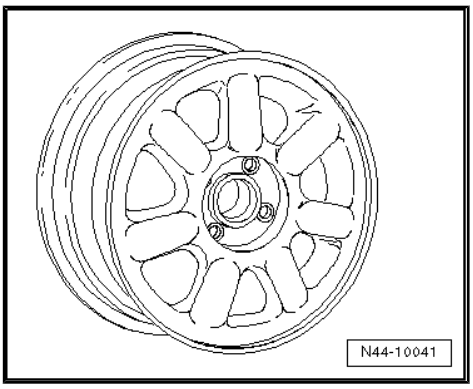

6X0 601 025 D - Wheel and tyre combination ⇒ page 402

Size:	6 J x 14
Wheel offset in mm:	43
Wheel load in kg:	475

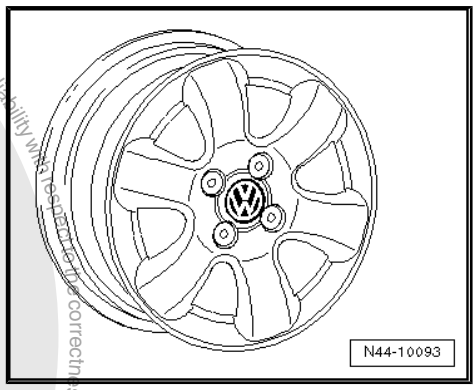

44.2.2 6 J x 15

Caution

Observe the allocation of wheels and tyres to the respective engines, which are listed in the overview table ⇒ page 402 .

Protected by copyright. Copying for private or commercial purposes, in part or in whole, is not permitted unless authorised by Volkswagen AG. Volkswagen AG does not guarantee or accept any liability with respect to the correctness of information in this document. Copyright by Volkswagen AG.
satelettronica

For vehicles with maximum permitted axle load of 920 kg

1H0 601 025 AD - Wheel and tyre combination ⇒ page 403

Size:	6 J x 15
Wheel offset in mm:	45
Wheel load in kg:	460

All vehicles

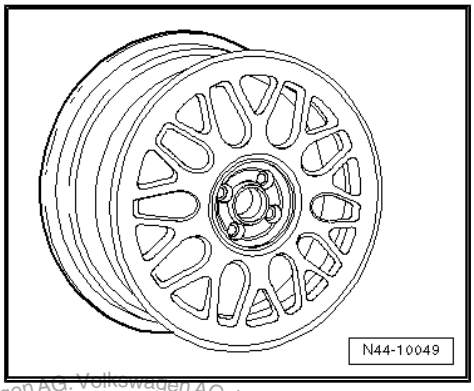

1H0 601 025 AE - Wheel and tyre combination ⇒ page 403

Size:	6 J x 15
Wheel offset in mm:	45
Wheel load in kg:	480

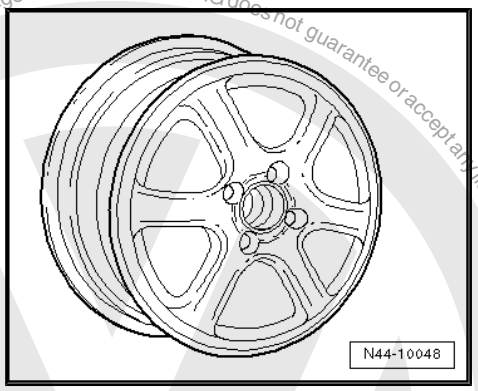

6X0 601 025 C - Wheel and tyre combination ⇒ page 403

Size:	6 J x 15
Wheel offset in mm:	45
Wheel load in kg:	475

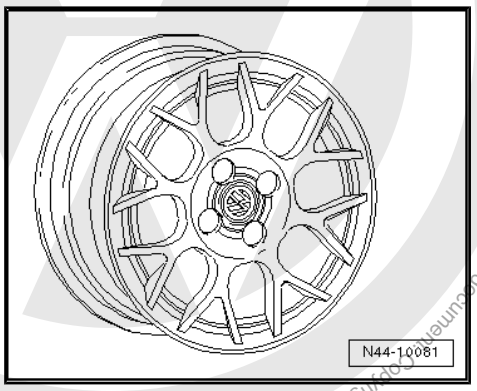

6X0 601 025 E - Wheel and tyre combination ⇒ page 403

Size:	6 J x 15
Wheel offset in mm:	43
Wheel load in kg:	475

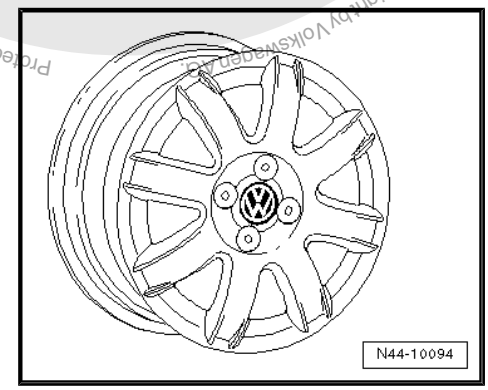

Protected by copyright. Copying for private or commercial purposes, in part or in whole, is not permitted unless authorised by Volkswagen AG. Volkswagen AG does not guarantee or accept any liability with respect to the correctness of information in this document. Copyright by VOLKSWAGEN AG.
satelettronica

44.2.3 6 1/2 J x 16

Caution

Observe the allocation of wheels and tyres to the respective engines, which are listed in the overview table ⇒ page 402 *.*

1H0 601 025 AJ - Wheel and tyre combination ⇒ page 403

Size:	6 1/2 J x 16
Wheel offset in mm:	45
Wheel load in kg:	480

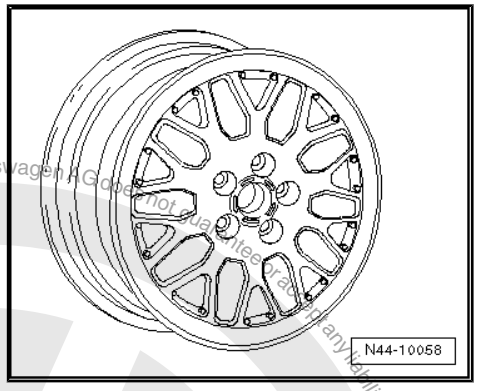

Protected by copyright. Copying for private or commercial purposes, in part or in whole, is not permitted unless authorised by Volkswagen AG. Volkswagen AG does not guarantee or assume any liability with respect to the correctness of information in this document. Copyright by Volkswagen AG.
satelettronica

45 Vento from model year 1992 to model year 1998

General

Volkswagen vehicles are built according to the latest findings in safety engineering. To keep it that way, we recommend the use of only genuine Volkswagen spare parts. You can recognise this by the VW Audi logo and by the part number. It has been established that these parts are reliable, safe and suitable.

Despite constant appraisal of the market, we cannot assess other products on these points, even when in isolated cases they have been passed by official inspectors or have been granted official approval. Therefore, we cannot, of course, assume any liability if these products are installed.

> ⚠ **WARNING**
>
> *The products from Volkswagen genuine parts and Votex genuine accessories may differ in fitting requirements, torque specifications and so on.*
>
> *Always follow the respective fitting and operating instructions.*

The wheel and tyre combinations or changes listed in the vehicle tables refer exclusively to Volkswagen Genuine wheels. Approval of wheel and tyre combinations or a change to wheels from the accessories trade is not possible with the parts certificate attached here.

> ⚠ **WARNING**
>
> *The fitting instructions and torque specifications for wheels from Votex genuine accessories may differ from those intended for wheels from Volkswagen genuine parts.*
>
> *Therefore, always observe the torque settings for the wheel bolts as well as the respective fitting and operating instructions.*

45.1 Vento; type 1HX0, 1H

Appendix 2 to Parts Certificate 1479/00

Vento, type 1HX0 from model year 1992 to model year 1997

General type approval No.: F 804

Vento, type 1H model year 1998

Type Approval No.: e1*96/79*0068*01 to e1*96/79*0068*03

Overview

Model engine output	Tyres	Tyre size	Wheel rim	Off-set in mm	Snow chains	Remarks
44 kW, 55 kW petrol engine;	Standard tyres	185/60 R 14 82T/H	6 J x 14 ⇒ page 411	45	Yes	
66 kW CL, GL petrol engine manual gearbox;	Modification	175/70 R 13 82S	$5^1/_2$ J x 13 ⇒ page 410	38	Yes	

Protected by copyright. Copying for private or commercial purposes, in whole or in part, is not permitted unless authorised by Volkswagen AG. Volkswagen AG does not guarantee or accept any liability with respect to the correctness of information in this document. Copyright by Volkswagen AG.
satelettronica

Model engine output	Tyres	Tyre size	Wheel rim	Off-set in mm	Snow chains	Remarks
47 kW, 55 kW diesel engine manual gearbox		175/65 R 14 82S	6 J x 14 ⇒ page 411	43/45	Yes	66 kW CL, GL vehicles require T tyres
55 kW and 66 kW with automatic gearbox to 12.94		185/60 R 14 82T	6 J x 14 ⇒ page 411	43/45	Yes	
		195/50 R 15 82H	6 J x 15 ⇒ page 413	45	Yes	
	Winter tyres	175/70 R 13 82Q	5 1/2 J x 13 ⇒ page 410	38	Yes	
55 kW and 66 kW with automatic gearbox to 01.95	Standard tyres	185/60 R 14 82H	6 J x 14 ⇒ page 411	43/45	Yes	
66 kW GT; 66 kW TDI	Modification	185/60 R 14 82T	6 J x 14 ⇒ page 411	43/45	Yes	General information on: ◆ Winter tyres ⇒ page 15 ◆ Snow chains ⇒ page 18
		195/50 R 15 82H	6 J x 15 ⇒ page 413	45	Yes	
	Winter tyres	175/65 R 14 82Q	6 J x 14 ⇒ page 411	43/45	Yes	Tyre makes recommended by Volkswagen: ◆ Summer tyres ⇒ page 641 ◆ All-season tyres ⇒ page 668 ◆ Winter tyres ⇒ page 680
44 kW, 47 kW, 55 kW with ABS from 05.96	Standard tyres	185/60 R 14 82H	6 J x 14 ⇒ page 411	43/45	Yes	
	Modification	185/60 R 14 82T	6 J x 14 ⇒ page 411	43/45	Yes	
		195/50 R 15 82H	6 J x 15 ⇒ page 413	45	Yes	
	Winter tyres	175/65 R 14 82Q	6 J x 14 ⇒ page 411	43/45	Yes	
74 kW, 85 kW CL, GL, GT; 81 kW TDI	Standard tyres	185/60 R 14 82H	6 J x 14 ⇒ page 411	43/45	Yes	
	Modification	195/50 R 15 82H	6 J x 15 ⇒ page 413	45	Yes	
	Winter tyres	175/65 R 14 82Q	6 J x 14 ⇒ page 411	43/45	Yes	
85 kW GT	Standard tyres	195/50 R 15 82H	6 J x 15 ⇒ page 413	38	Yes	

Volkswagen AG does not guarantee or accept any liability with respect to the correctness of information in this document. Copyright by Volkswagen AG. Protected by copyright. Copying for private or commercial purposes, in part or in whole, is not permitted unless authorised by Volkswagen AG.

satelettronica

Model engine output	Tyres	Tyre size	Wheel rim	Off-set in mm	Snow chains	Remarks
	Modification	195/50 R 15 82H	$6^1/_2$ J x 15 ⇒ page 415	43	Yes	
		205/50 R 15 86H	$6^1/_2$ J x 15	43	Yes	
	Winter tyres	185/55 R 15 81T reinforced	6 J x 15 ⇒ page 415	38	Yes	Vehicles to 04.96
		185/55 R 15 81T reinforced	6 J x 15 ⇒ page 413	35	Yes	Vehicles from 05.96
128 kW VR6	Standard tyres	205/50 R 15 86V	$6^1/_2$ J x 15 ⇒ page 415	43	Yes	
	Modification	No changes are permissible apart from the standard wheel and tyre combinations!				
	Winter tyres	185/55 R 15 81T reinforced	6 J x 15 ⇒ page 414	38	Yes	Vehicles to 12.94
		185/55 R 15 81T reinforced	6 J x 15 ⇒ page 415	35	Yes	Vehicles from 01.95

Tyre pressures can be found on the inside of the fuel tank flap or in ⇒ Maintenance ; Booklet 35

45.2 Wheel allocation for Vento; type 1HX0, 1H

Vento, type 1HX0 from model year 1992 to model year 1997

Vento, type 1H model year 1998

Explanation of information on wheels ⇒ page 59

Torque specifications for wheel bolts ⇒ Running gear; Rep. gr. 40 ; Repairing front suspension (basic running gear); Removing and installing wheel bearing, strut, drive shaft (basic suspension) or ⇒ Running gear; Rep. gr. 40 ; Repairing front suspension (plus running gear); Removing and installing wheel bearing, strut (plus running gear)

Pitch circle diameter: 100 mm

45.2.1 $5^1/_2$ J x 13

Caution

Observe the allocation of wheels and tyres to the respective engines, which are listed in the overview table ⇒ page 408 .

Copyright by Volkswagen AG. Volkswagen AG does not guarantee or accept any liability with respect to the correctness of information in this document. Copyright by Volkswagen AG. Any transmission or duplication, even in part, is not permitted unless authorised by Volkswagen AG for commercial purposes, in part or in whole, is not permitted unless authorised by Volkswagen AG for commercial purposes or commercial use.

satelettronica

Vento to 55 kW CL, GL with manual gearbox (front-wheel drive)

191 601 025 D - Wheel and tyre combination ⇒ page 408

Size:	$5^1/_2$ J x 13
Wheel offset in mm:	38
Wheel load in kg:	410
Number of wheel bolt holes:	4

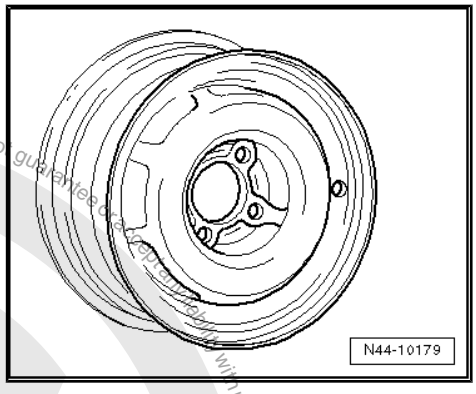

Vento to 66 kW CL, GL with petrol engine, Vento to 55 kW CL, GL with diesel engine, Vento GT

1H0 601 025 A - Wheel and tyre combination ⇒ page 408

Size:	$5^1/_2$ J x 13
Wheel offset in mm:	38
Wheel load in kg:	450
Number of wheel bolt holes:	4

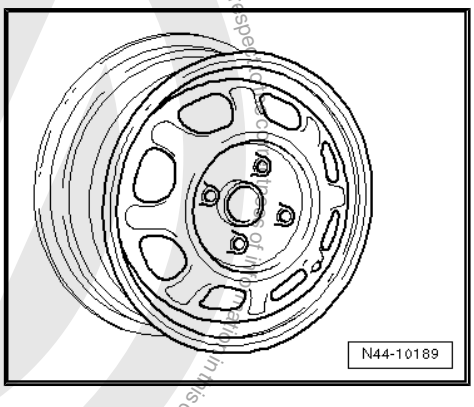

321 601 025 J/M - Wheel and tyre combination ⇒ page 408

Size:	$5^1/_2$ J x 13
Wheel offset in mm:	38
Wheel load in kg:	460
Number of wheel bolt holes:	4

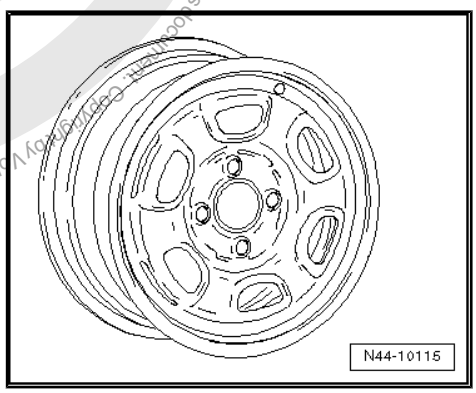

45.2.2 6 J x 14

Caution

Observe the allocation of wheels and tyres to the respective engines, which are listed in the overview table ⇒ page 408 *.*

Protected by copyright. Copying for private or commercial purposes, in part or in whole, is not permitted unless authorised by Volkswagen AG. Volkswagen AG does not guarantee or accept any liability with respect to the correctness of information in this document. Copyright by Volkswagen AG.

satelettronica

Vento to 85 kW CL, GL, Vento 66 kW GT, to 55 kW CL, GL diesel engine, Vento GTD, Vento 66 kW and 81 kW TDI

811 601 025 P - Wheel and tyre combination ⇒ page 408

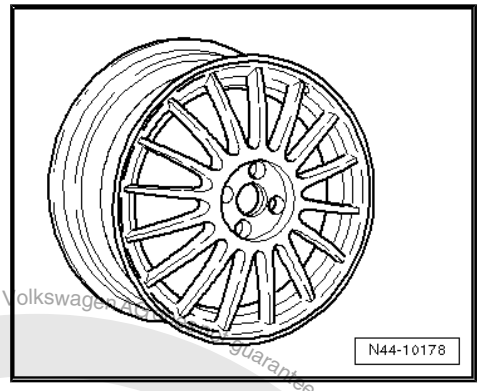

Note

This rim is allowed only for vehicles with a maximum permitted axle load of 880 kg.

Size:	6 J x 14
Wheel offset in mm:	45
Wheel load in kg:	440
Number of wheel bolt holes:	4

1H0 601 025 D - Wheel and tyre combination ⇒ page 408

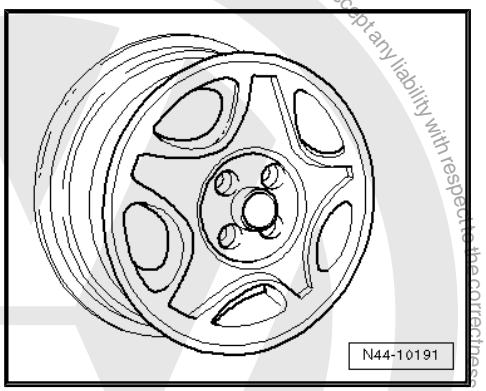

Size:	6 J x 14
Wheel offset in mm:	45
Wheel load in kg:	450
Number of wheel bolt holes:	4

1H0 601 027 - Wheel and tyre combination ⇒ page 408

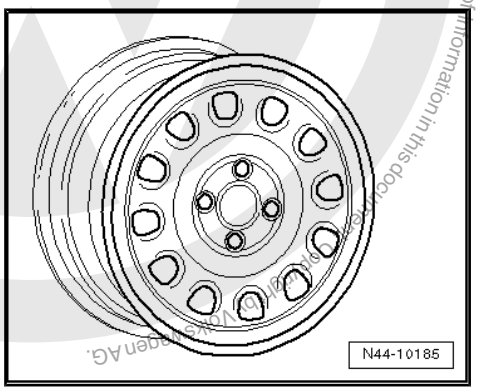

Size:	6 J x 14
Wheel offset in mm:	45
Wheel load in kg:	500
Number of wheel bolt holes:	4

1H0 601 027 A - Wheel and tyre combination ⇒ page 409

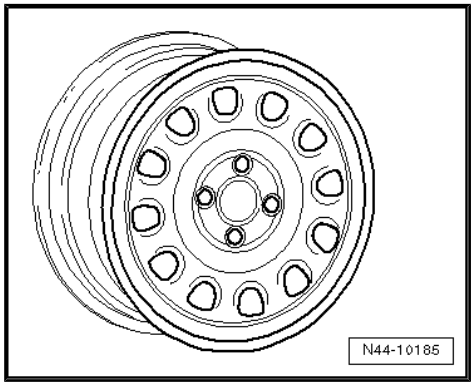

Size:	6 J x 14
Wheel offset in mm:	43
Wheel load in kg:	500
Number of wheel bolt holes:	4

Protected by copyright. Copying for private or commercial purposes, in part or in whole, is not permitted unless authorised by Volkswagen AG. Volkswagen AG does not guarantee or accept any liability with respect to the correctness of information in this document. Copyright by Volkswagen AG.
satelettronica

1H0 601 025 P - Wheel and tyre combination ⇒ page 408

Size:	6 J x 14
Wheel offset in mm:	45
Wheel load in kg:	460
Number of wheel bolt holes:	4

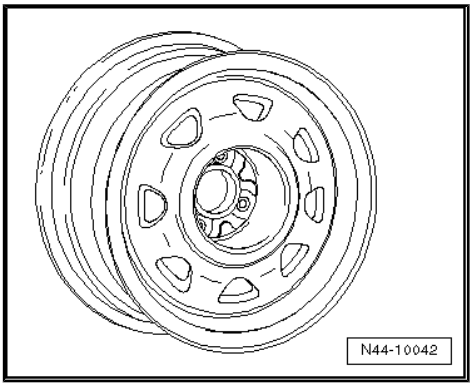

1HM 601 025 - Wheel and tyre combination ⇒ page 408

Size:	6 J x 14
Wheel offset in mm:	45
Wheel load in kg:	460
Number of wheel bolt holes:	4

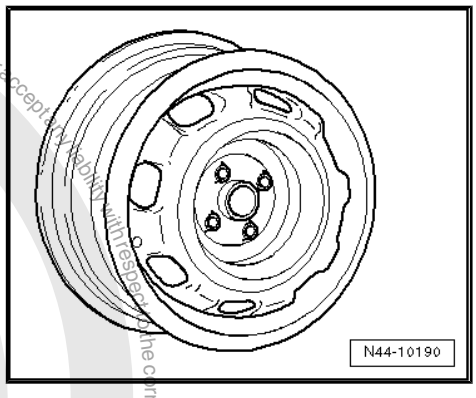

1H0 601 025 B - Wheel and tyre combination ⇒ page 408

Size:	6 J x 14
Wheel offset in mm:	45
Wheel load in kg:	460
Number of wheel bolt holes:	4

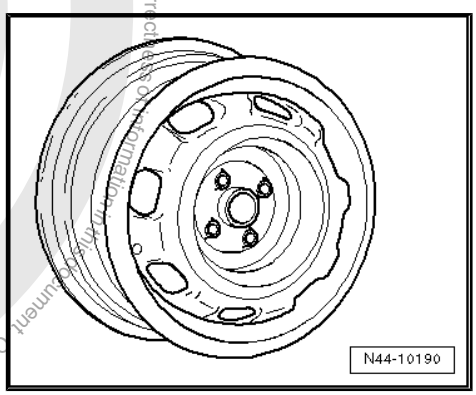

1H0 601 025 R - Wheel and tyre combination ⇒ page 408

Size:	6 J x 14
Wheel offset in mm:	45
Wheel load in kg:	500
Number of wheel bolt holes:	4

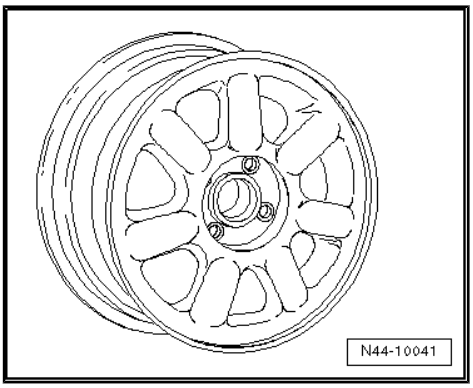

45.2.3 6 J x 15

Caution

Observe the allocation of wheels and tyres to the respective engines, which are listed in the overview table *⇒ page 408* *.*

Protected by copyright. Copying for private or commercial purposes, in part or in whole, is not permitted unless authorised by Volkswagen AG. Volkswagen AG does not guarantee or accept any liability with respect to the correctness of information in this document. Copyright by Volkswagen AG.

satelettronica

Vento to 85 kW CL, GL, Vento 66 kW GT, to 55 kW CL, GL diesel engine, Vento GTD, Vento 66 kW and 81 kW TDI

1H0 601 025 E - Wheel and tyre combination ⇒ page 409

Size:	6 J x 15
Wheel offset in mm:	45
Wheel load in kg:	450
Number of wheel bolt holes:	4

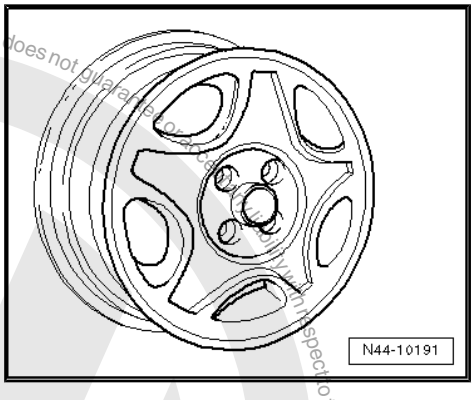

1H0 601 025 L - Wheel and tyre combination ⇒ page 409

Size:	6 J x 15
Wheel offset in mm:	45
Wheel load in kg:	450
Number of wheel bolt holes:	4

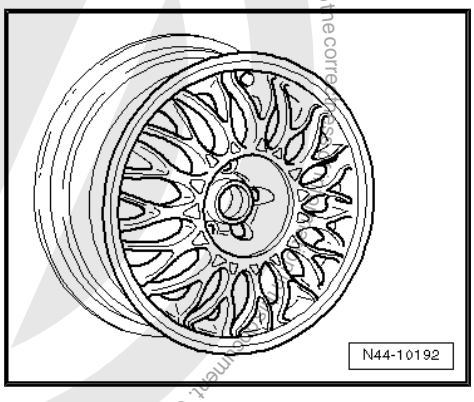

1H0 601 025 Q - Wheel and tyre combination ⇒ page 409

Size:	6 J x 15
Wheel offset in mm:	45
Wheel load in kg:	450
Number of wheel bolt holes:	4

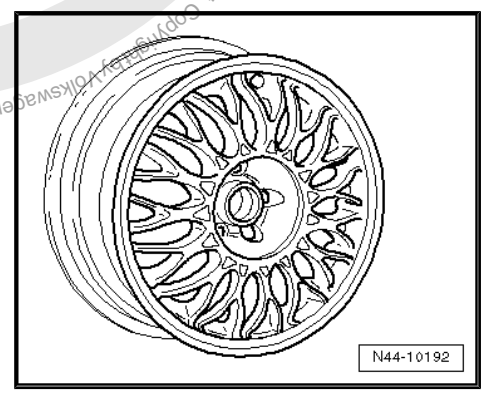

1H0 601 025 AD - Wheel and tyre combination ⇒ page 409

Size:	6 J x 15
Wheel offset in mm:	45
Wheel load in kg:	460
Number of wheel bolt holes:	4

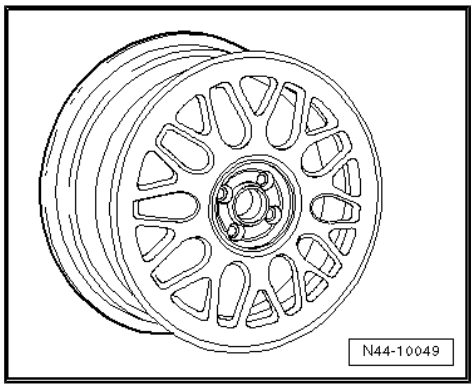

Vento VR6 to 12.94

Volkswagen AG does not guarantee or accept any liability with respect to the correctness of information. Copyright by Volkswagen AG.
This document is protected by copyright. Copying for private or commercial purposes, in part or in whole, is not permitted unless authorised by Volkswagen AG.
satelettronica

1H0 601 025 K - Wheel and tyre combination ⇒ page 410

Size:	6 J x 15
Wheel offset in mm:	38
Wheel load in kg:	490
Number of wheel bolt holes:	5

Vento 85 kW GT to 04.96

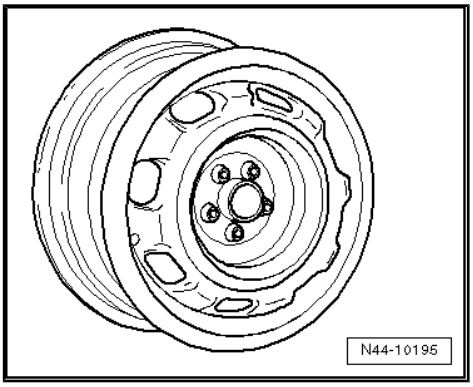

1H0 601 025 J - Wheel and tyre combination ⇒ page 410

Size:	6 J x 15
Wheel offset in mm:	38
Wheel load in kg:	530
Number of wheel bolt holes:	5

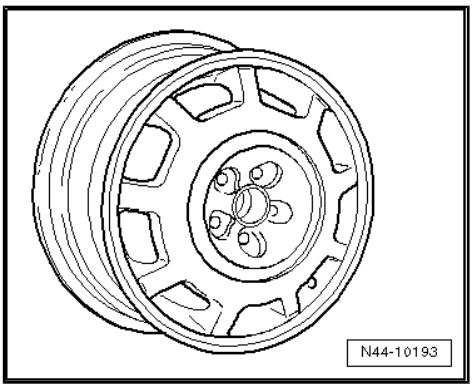

1H0 601 025 K - Wheel and tyre combination ⇒ page 410

Size:	6 J x 15
Wheel offset in mm:	38
Wheel load in kg:	490
Number of wheel bolt holes:	5

Vento 85 kW GT, Vento VR6

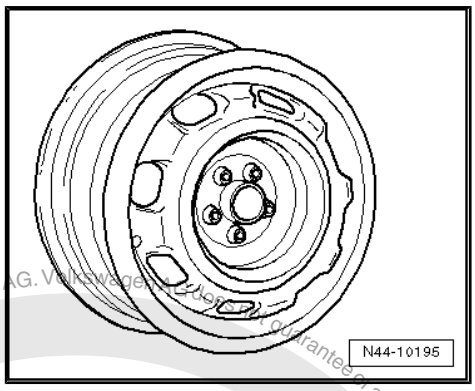

3A0 601 027 - Wheel and tyre combination ⇒ page 410

Size:	6 J x 15
Wheel offset in mm:	35
Wheel load in kg:	530
Number of wheel bolt holes:	5

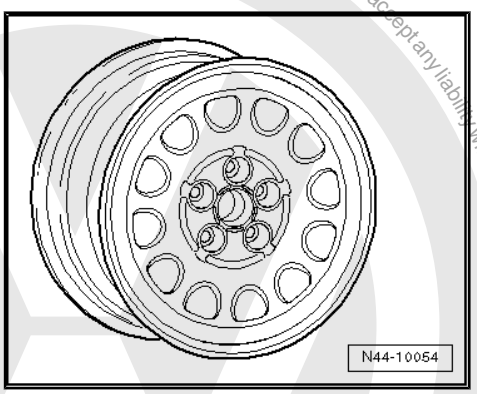

45.2.4 6 1/2 J x 15

Caution

Observe the allocation of wheels and tyres to the respective engines, which are listed in the overview table *⇒ page 408* *.*

satelettronica
Protected by copyright. Copyright by Volkswagen AG. Volkswagen does not guarantee or accept any liability with respect to the correctness of information in this document. Copyright by Volkswagen AG.
Reproduction, in whole or in part, for commercial purposes, is not permitted unless authorised by Volkswagen AG.

Vento VR6 to 12.94

1H0 601 025 F - Wheel and tyre combination ⇒ page 410

Size:	$6^1/_2$ J x 15
Wheel offset in mm:	43
Wheel load in kg:	490
Number of wheel bolt holes:	5

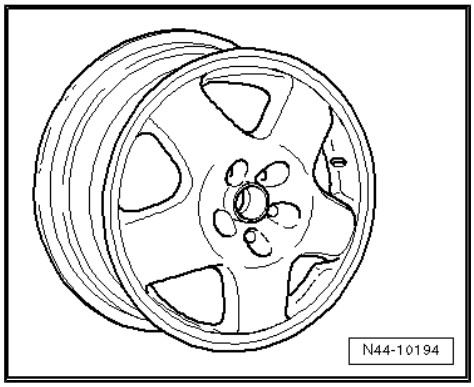

Vento 85 kW GT to 04.96

1H0 601 025 F - Wheel and tyre combination ⇒ page 410

Size:	$6^1/_2$ J x 15
Wheel offset in mm:	43
Wheel load in kg:	490
Number of wheel bolt holes:	5

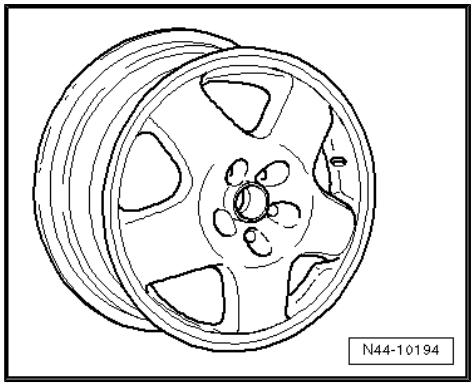

Vento 85 kW GT, Vento VR6

1H0 601 025 AA - Wheel and tyre combination ⇒ page 410

Size:	$6^1/_2$ J x 15
Wheel offset in mm:	43
Wheel load in kg:	500
Number of wheel bolt holes:	5

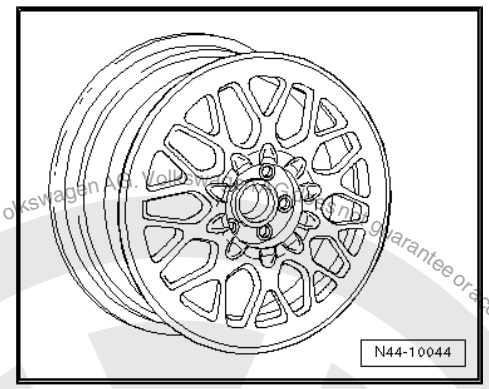

1H0 601 025 S- Wheel and tyre combination ⇒ page 410

Size:	$6^1/_2$ J x 15
Wheel offset in mm:	43
Wheel load in kg:	490
Number of wheel bolt holes:	5

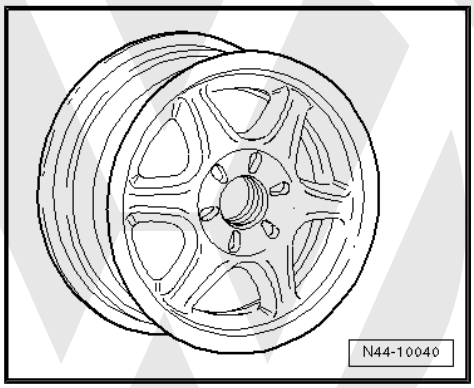

Protected by copyright. Copying for private or commercial purposes, in part or in whole, is not permitted unless authorised by Volkswagen AG. Volkswagen AG does not guarantee or accept any liability with respect to the correctness of information in this document. Copyright by Volkswagen AG.
satelettronica

Protected by copyright. Copying for private or commercial purposes, in part or in whole, is not permitted unless authorised by Volkswagen AG. Volkswagen AG does not guarantee or accept any liability with respect to the correctness of information in this document. Copyright by Volkswagen AG.

1H0 601 025 AB - Wheel and tyre combination ⇒ page 410

Size:	$6^1/_2$ J x 15
Wheel offset in mm:	43
Wheel load in kg:	510
Number of wheel bolt holes:	5

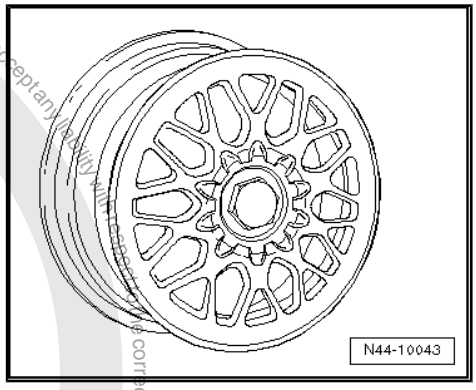

1H0 601 025 T - Wheel and tyre combination ⇒ page 410

Size:	$6^1/_2$ J x 15
Wheel offset in mm:	43
Wheel load in kg:	490
Number of wheel bolt holes:	5

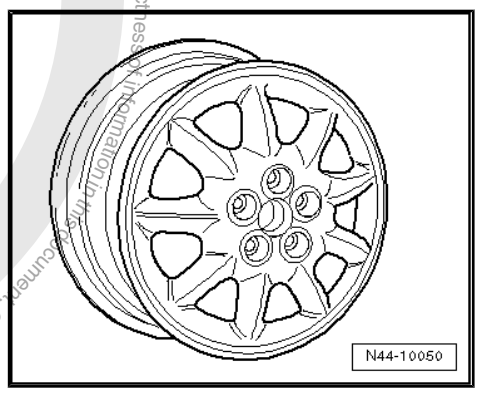

1H0 601 025 AF - Wheel and tyre combination ⇒ page 410

Size:	$6^1/_2$ J x 15
Wheel offset in mm:	43
Wheel load in kg:	490
Number of wheel bolt holes:	5

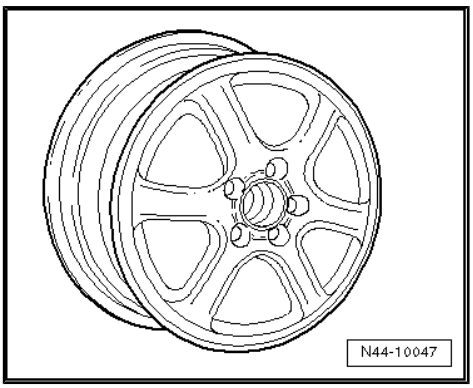

1H0 601 025 AG - Wheel and tyre combination ⇒ page 410

Size:	$6^1/_2$ J x 15
Wheel offset in mm:	43
Wheel load in kg:	500
Number of wheel bolt holes:	5

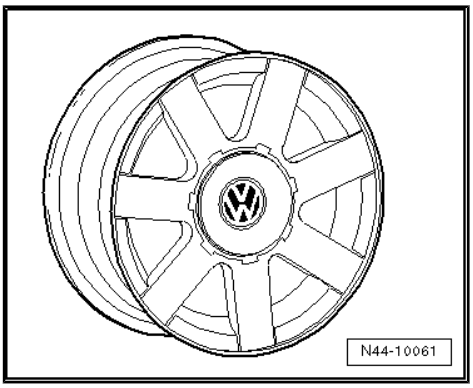

satelettronica

1H0 601 025 M - Wheel and tyre combination ⇒ page 410

Size:	$6^1/_2$ J x 15
Wheel offset in mm:	43
Wheel load in kg:	490
Number of wheel bolt holes:	5

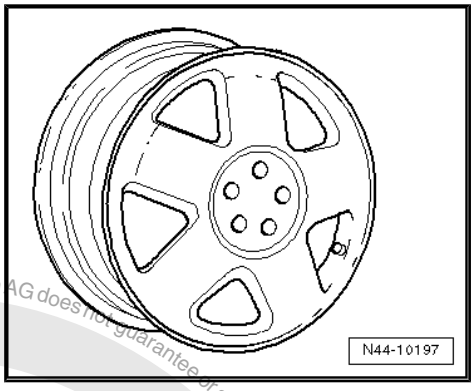

535 601 025 D - Wheel and tyre combination ⇒ page 410

Size:	$6^1/_2$ J x 15
Wheel offset in mm:	43
Wheel load in kg:	510
Number of wheel bolt holes:	5

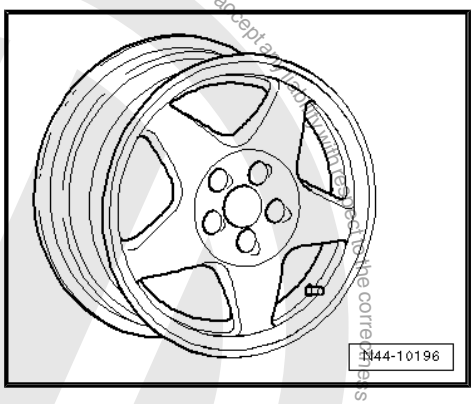

1H0 601 025 G - Wheel and tyre combination ⇒ page 410

Size:	$6^1/_2$ J x 15
Wheel offset in mm:	43
Wheel load in kg:	490
Number of wheel bolt holes:	5

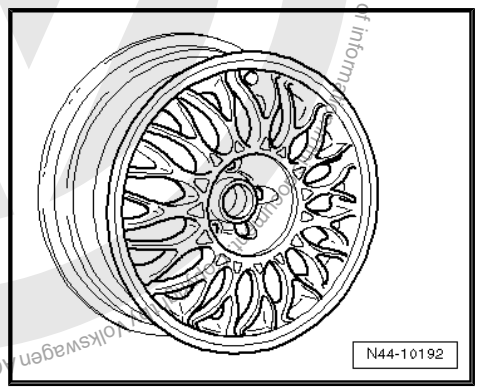

1H0 601 025 N - Wheel and tyre combination ⇒ page 410

Size:	$6^1/_2$ J x 15
Wheel offset in mm:	43
Wheel load in kg:	490
Number of wheel bolt holes:	5

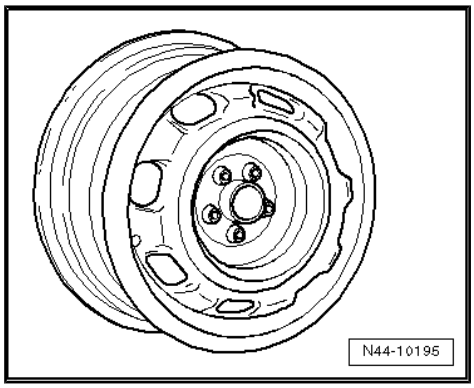

Protected by copyright. Copying for private or commercial purposes, in part or in whole, is not permitted unless authorised by Volkswagen AG. Volkswagen AG does not guarantee or accept any liability with respect to the correctness of information

satelettronica

46 Bora model year 1999 to model year 2005

General

Volkswagen vehicles are built according to the latest findings in safety engineering. To keep it that way, we recommend the use of only genuine Volkswagen spare parts. You can recognise this by the VW Audi logo and by the part number. It has been established that these parts are reliable, safe and suitable.

Despite constant appraisal of the market, we cannot assess other products on these points, even when in isolated cases they have been passed by official inspectors or have been granted official approval. Therefore, we cannot, of course, assume any liability if these products are installed.

> ⚠ **WARNING**
>
> *The products from Volkswagen genuine parts and Votex genuine accessories may differ in fitting requirements, torque specifications and so on.*
>
> *Always follow the respective fitting and operating instructions.*

The wheel and tyre combinations or changes listed in the vehicle tables refer exclusively to Volkswagen Genuine wheels. Approval of wheel and tyre combinations or a change to wheels from the accessories trade is not possible with the parts certificate attached here.

> ⚠ **WARNING**
>
> *The fitting instructions and torque specifications for wheels from Votex genuine accessories may differ from those intended for wheels from Volkswagen genuine parts.*
>
> *Therefore, always observe the torque settings for the wheel bolts as well as the respective fitting and operating instructions.*

46.1 Bora, Bora 4Motion, type 1J model year 1999 to model year 2005

Appendix 2 to Parts Certificate 1958/04

Type Approval No.: e1*96/79*0071*05 to e1*96/79*0071*09

Type Approval No.: e1*98/14*0071*10 to e1*98/14*0071*30

Type Approval No.: e1*2001/116*0071*31 to e1*2001/116*0071*36

Overview

Model engine output	Tyres	Tyre size	Wheel rim	Off-set in mm	Snow chains	Remarks
1.4l 55 kW petrol engine; 1.9l 50 kW diesel engine	Standard tyres	195/65 R 15 91T	6 J x 15 ⇒ page 422	38	Yes	General information on: ◆ Winter tyres ⇒ page 15 ◆ Snow chains ⇒ page 18

satelettronica

Model engine output	Tyres	Tyre size	Wheel rim	Off-set in mm	Snow chains	Remarks
	Modification	205/55 R 16 91H	$6^1/_2$ J x 16 ⇒ page 425	42	No	Tyre makes recommended by Volkswagen: ♦ Summer tyres ⇒ page 649 ♦ All-season tyres ⇒ page 670 ♦ Winter tyres ⇒ page 685
		225/45 R 17 91W	7 J x 17 ⇒ page 430	38	No	
	Winter tyres	195/65 R 15 91Q/T	6 J x 15 ⇒ page 422	38	Yes	
		205/55 R 16 91T/H	$5^1/_2$ J x 16 ⇒ page 425	36	Yes	
1.9l 66 kW TDI	Standard tyres	195/65 R 15 91T	6 J x 15 ⇒ page 422	38	Yes	The 225/45 R 17 tyre may be mounted on the 7 J x 17 or the $7^1/_2$ J x 17 rim only if the listed conditions ⇒ page 433 are fulfilled!
	Modification	205/55 R 16 91H	$6^1/_2$ J x 16 ⇒ page 425	42	No	
		225/45 R 17 91W	7 J x 17 ⇒ page 430	38	No	
		225/45 R 17 91W	$7^1/_2$ J x 17 ⇒ page 432	38	No	
	Winter tyres	195/65 R 15 91Q/T	6 J x 15 ⇒ page 422	38	Yes	
		205/55 R 16 91T/H	$5^1/_2$ J x 16 ⇒ page 425	36	Yes	
1.6l 74 kW, 75 kW, 77 kW, 81 kW, 2.0l 85 kW petrol engine; 1.9l 74 kW, 81 kW, 85 kW TDI	Standard tyres	195/65 R 15 91H	6 J x 15 ⇒ page 422	38	Yes	The adhesive weights for balancing must be attached to the inner side of the rim of $6^1/_2$ J x 16 aluminium wheels!
	Modification	205/55 R 16 91H	$6^1/_2$ J x 16 ⇒ page 425	42	No	4Motion vehicles: Snow chains are permitted on the front wheels only.
		225/45 R 17 91W	7 J x 17 ⇒ page 430	38	No	
		225/45 R 17 91W	$7^1/_2$ J x 17 ⇒ page 432	38	No	

Protected by copyright. Copying for private or commercial purposes, in part or in whole, is not permitted unless authorised by Volkswagen AG. © Volkswagen AG does not guarantee or accept any liability with respect to the correctness of information in this document. Copyright by Volkswagen AG.

satelettronica

Model engine output	Tyres	Tyre size	Wheel rim	Off-set in mm	Snow chains	Remarks
	Winter tyres	195/65 R 15 91Q/T	6 J x 15 ⇒ page 422	38	Yes	
		205/55 R 16 91T/H	5 1/2 J x 16 ⇒ page 425	36	Yes	
1.8l 92 kW; 1.8l 110 kW; 2.3l 110 kW petrol engines; 1.9l 96 kW TDI; 1.9l 110 kW TDI	Standard tyres	195/65 R15 91V	6 J x 15 ⇒ page 422	38	Yes	
	Modification	205/55 R 16 91V	6 1/2 J x 16 ⇒ page 425	42	No	
		225/45 R 17 91W	7 J x 17 ⇒ page 430	38	No	
		225/45 R 17 91W	7 1/2 J x 17 ⇒ page 432	38	No	
	Winter tyres	195/65 R 15 91Q/T	6 J x 15 ⇒ page 422	38	Yes	
		205/55 R 16 91T/H	5 1/2 J x 16 ⇒ page 425	36	Yes	
1.8l 132 kW; 2.3l 125 kW	Standard tyres	205/55 R 16 91W	6 1/2 J x 16 ⇒ page 428	42	No	
	Modification	205/55 R 16 91V	6 1/2 J x 16 ⇒ page 428	42	No	
		225/45 R 17 91W	7 J x 17 ⇒ page 430	38	No	
		225/45 R 17 91W	7 1/2 J x 17 ⇒ page 432	38	No	
	Winter tyres	205/55 R 16 91T/H	5 1/2 J x 16 ⇒ page 425	36	Yes	
2.8l 150 kW	Standard tyres	205/55 R 16 91W	6 1/2 J x 16 ⇒ page 428	42	No	
	Modification	225/45 R 17 91W	7 J x 17 ⇒ page 430	38	No	
		225/45 R 17 91W	7 1/2 J x 17 ⇒ page 432	38	No	
	Winter tyres	205/55 R 16 91T/H	5 1/2 J x 16 ⇒ page 425	36	Yes	

Brought to you by satelettronica
This document copyright by Volkswagen AG. Volkswagen AG does not guarantee or accept any liability with respect to the correctness of information in this document. Copying for private or commercial purposes, in part or in whole, is not permitted unless authorised by Volkswagen AG. Copyright. Copying for private or commercial purposes, in part or in whole, is not permitted unless authorised by Volkswagen AG.

Tyre pressures can be found on the inside of the fuel tank flap or in ⇒ Maintenance ; Booklet 37

46.2 Wheel allocation for Bora, Bora 4Motion, type 1J model year 1999 to model year 2005

Explanation of information on wheels ⇒ page 59

Wheel bolt torque settings ⇒ Running gear, axles, steering - front and four-wheel drive; Rep. gr. 44 ; Wheel bolt torque settings

Pitch circle diameter:	100 mm
Number of wheel bolt holes:	5

46.2.1 6 J x 15

Caution

Observe the allocation of wheels and tyres to the respective engines, which are listed in the overview table *⇒ page 419* *.*

For vehicles with maximum permitted axle load of 1,000 kg

1J0 601 025 N, 1J0 601 025 AG - Wheel and tyre combination ⇒ page 419

Size:	6 J x 15
Wheel offset in mm:	38
Wheel load in kg:	500

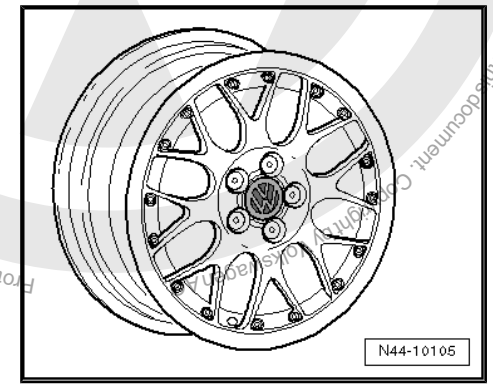

1J0 601 025 B, 1J0 601 025 AA - Wheel and tyre combination ⇒ page 419

Size:	6 J x 15
Wheel offset in mm:	38
Wheel load in kg:	500

For vehicles up to and including 96 kW and petrol engines to 110 kW

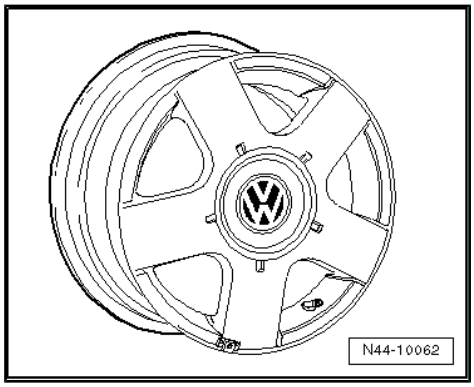

Protected by copyright. Copying for private or commercial purposes, in part or in whole, is not permitted unless authorised by Volkswagen AG. Volkswagen AG does not guarantee or accept any liability with respect to the correctness of information in this document. Copyright by Volkswagen AG.
satelettronica

1J0 601 027 - Wheel and tyre combination ⇒ page 419

Size:	6 J x 15
Wheel offset in mm:	38
Wheel load in kg:	550

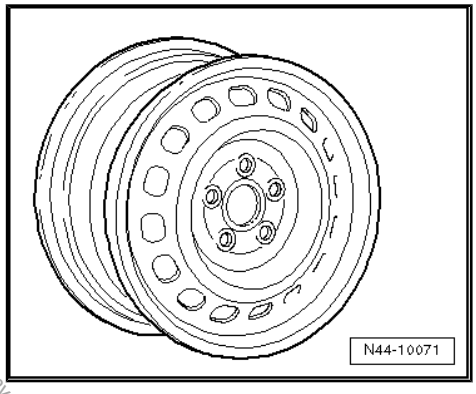

1J0 601 027 H, 1J0 601 027 Q - Wheel and tyre combination ⇒ page 419

Size:	6 J x 15
Wheel offset in mm:	38
Wheel load in kg:	550

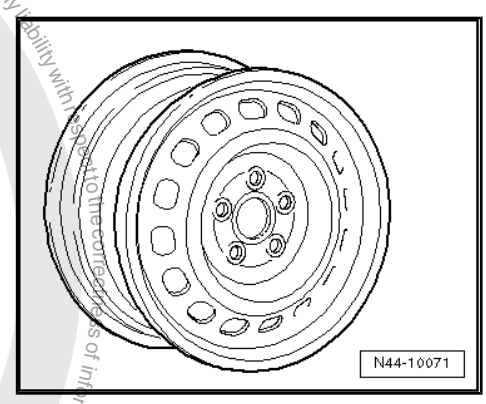

1J0 601 025 Q - Wheel and tyre combination ⇒ page 419

Size:	6 J x 15
Wheel offset in mm:	38
Wheel load in kg:	530

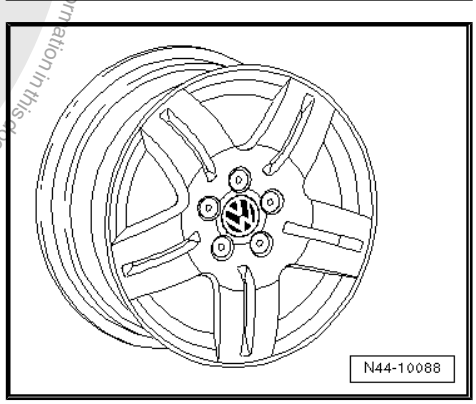

1J0 601 025 AK - Wheel and tyre combination ⇒ page 419

Size:	6 J x 15
Wheel offset in mm:	38
Wheel load in kg:	580

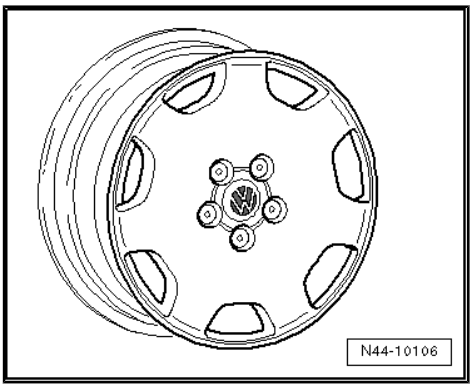

Protected by copyright. Copying for private or commercial purposes, in part or in whole, is not permitted unless authorised by Volkswagen AG. Volkswagen AG does not guarantee or accept any liability with respect to the correctness of information in this document. Copyright by Volkswagen AG.
satelettronica

1C0 601 025 F - Wheel and tyre combination ⇒ page 419

Size:	6 J x 15
Wheel offset in mm:	38
Wheel load in kg:	550

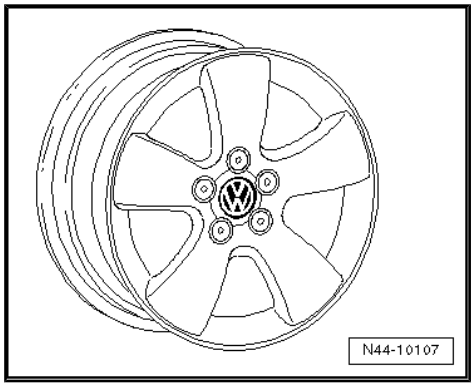

1J0 601 025 BD - Wheel and tyre combination ⇒ page 419

Size:	6 J x 15
Wheel offset in mm:	38
Wheel load in kg:	580

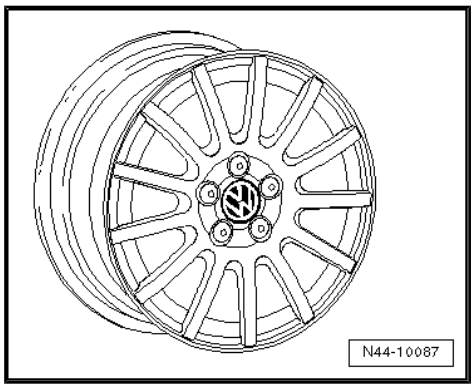

1J0 601 025 P, 1J0 601 025 AL - Wheel and tyre combination ⇒ page 419

Size:	6 J x 15
Wheel offset in mm:	38
Wheel load in kg:	550

For vehicles with 110 kW TDI and petrol engines 1.8l 132 kW, 2.3l 125 kW, 2.8l 150 kW

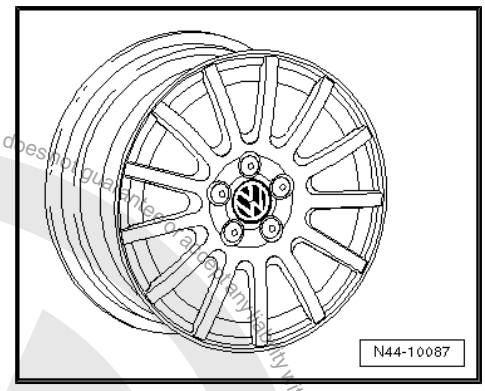

1J0 601 025 BD - Wheel and tyre combination ⇒ page 421

Size:	6 J x 15
Wheel offset in mm:	38
Wheel load in kg:	580

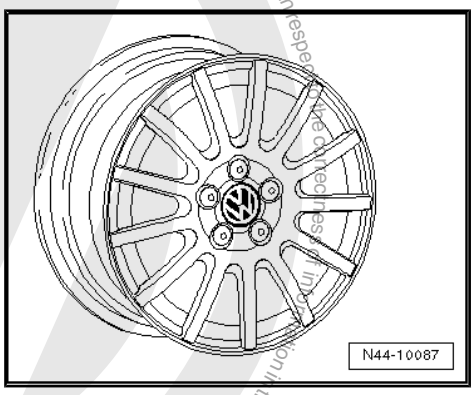

Protected by copyright. Copying for private or commercial purposes, in part or in whole, is not permitted unless authorised by Volkswagen AG. Volkswagen AG does not guarantee or assume any liability with respect to the correctness of information in this document. Copyright by Volkswagen AG.
satelettronica

1J0 601 025 P, 1J0 601 025 AL - Wheel and tyre combination
⇒ page 421

Size:	6 J x 15
Wheel offset in mm:	38
Wheel load in kg:	550

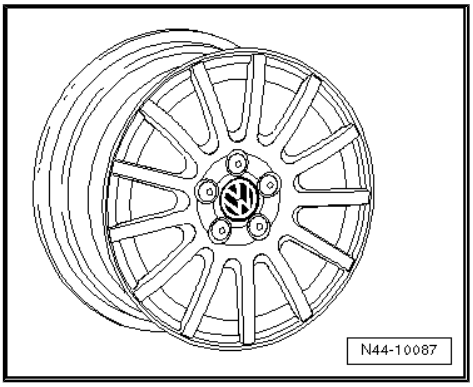

46.2.2 5 1/2 J x 16

> **Caution**
>
> *Observe the allocation of wheels and tyres to the respective engines, which are listed in the overview table* ⇒ page 419 *.*

For vehicles up to and including 96 kW and petrol engines to 110 kW

For vehicles with 110 kW TDI and petrol engines 1.8l 132 kW, 2.3l 125 kW, 2.8l 150 kW

Winter wheels

1J0 601 025 M, 1J0 601 025 AF - Wheel and tyre combination
⇒ page 420

Size:	5 1/2 J x 16
Wheel offset in mm:	36
Wheel load in kg:	550

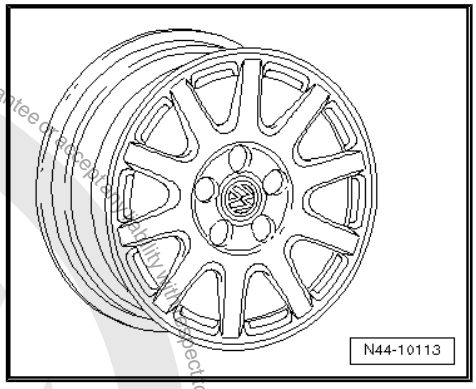

46.2.3 6 1/2 J x 16

> **Caution**
>
> *Observe the allocation of wheels and tyres to the respective engines, which are listed in the overview table* ⇒ page 419 *.*

Protected by copyright. Copying for private or commercial purposes, in part or in whole, is not permitted unless authorised by Volkswagen AG. Volkswagen AG does not guarantee or accept any liability with respect to the correctness of information in this document. Copyright by Volkswagen AG.
satelettronica

For vehicles with maximum permitted axle load of 1,000 kg

1C0 601 025 A, 1C0 601 025 D - Wheel and tyre combination
⇒ page 420

Size:	$6^1/_2$ J x 16
Wheel offset in mm:	42
Wheel load in kg:	500

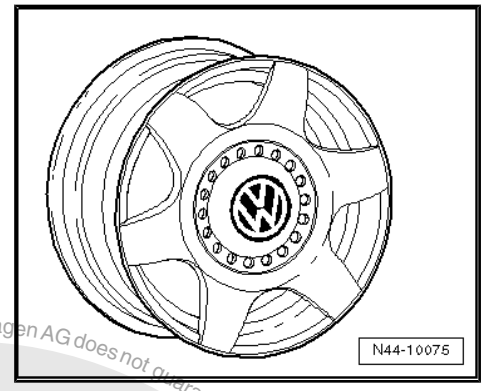

For vehicles up to and including 96 kW and petrol engines to 110 kW

1J0 601 027 L, 1J0 601 027 R - Wheel and tyre combination
⇒ page 420

Size:	$6^1/_2$ J x 16
Wheel offset in mm:	42
Wheel load in kg:	550

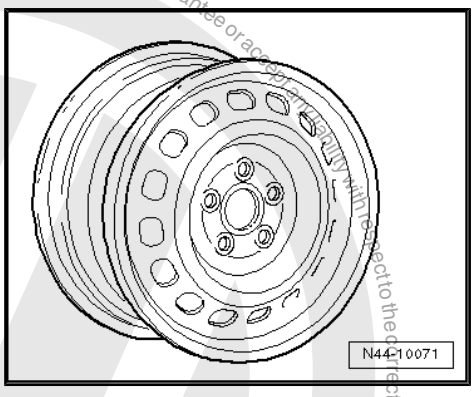

1J0 601 025 F, 1J0 601 025 AC - Wheel and tyre combination
⇒ page 420

Size:	$6^1/_2$ J x 16
Wheel offset in mm:	42
Wheel load in kg:	530

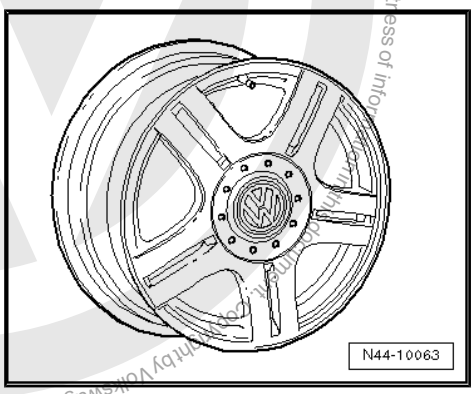

1J0 601 025 E, 1J0 601 025 AD - Wheel and tyre combination
⇒ page 420

Size:	$6^1/_2$ J x 16
Wheel offset in mm:	42
Wheel load in kg:	530

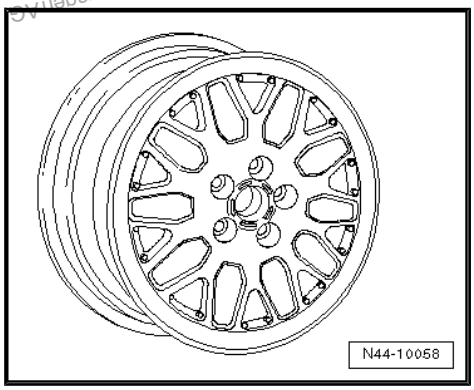

Protected by copyright. Copying for private or commercial purposes, in part or in whole, is not permitted unless authorised by Volkswagen AG. Volkswagen AG does not guarantee or accept any liability with respect to the correctness of information.
Copyright by Volkswagen AG.
satelettronica

1J0 601 025 H, 1J0 601 025 AH - Wheel and tyre combination
⇒ page 420

Size:	$6^1/_2$ J x 16
Wheel offset in mm:	42
Wheel load in kg:	530

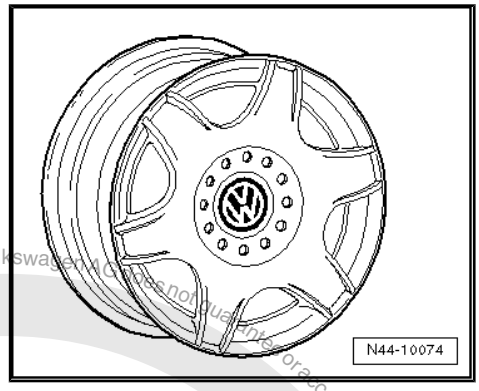

1J0 601 025 L, 1J0 601 025 AE - Wheel and tyre combination
⇒ page 420

Size:	$6^1/_2$ J x 16
Wheel offset in mm:	42
Wheel load in kg:	550

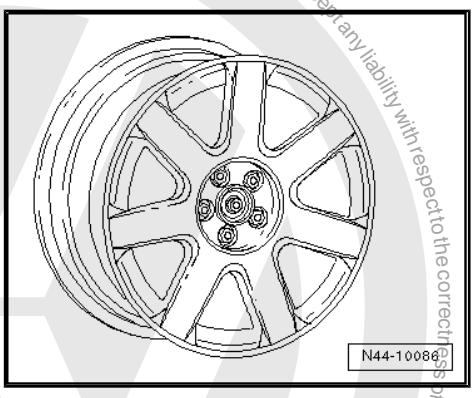

1C0 601 025 G - Wheel and tyre combination ⇒ page 420

Size:	$6^1/_2$ J x 16
Wheel offset in mm:	42
Wheel load in kg:	550

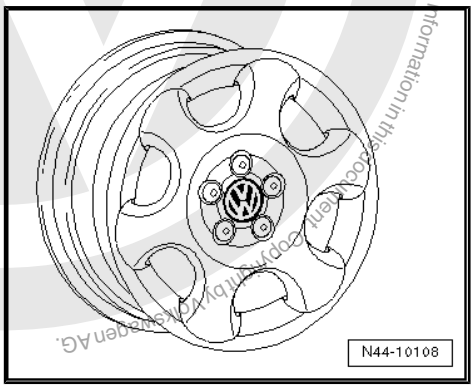

1C0 601 025 H - Wheel and tyre combination ⇒ page 420

Size:	$6^1/_2$ J x 16
Wheel offset in mm:	42
Wheel load in kg:	550

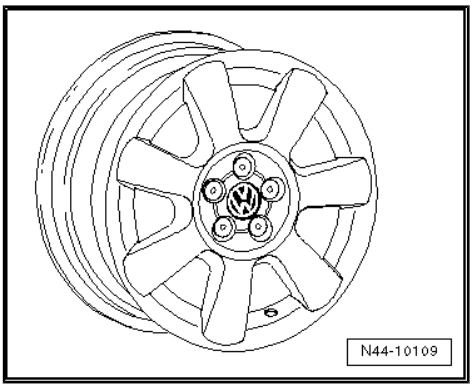

Protected by copyright. Copying for private or commercial purposes, in part or in whole, is not permitted unless authorised by Volkswagen AG. Volkswagen AG does not guarantee or accept any liability with respect to the correctness of information in this document. Copyright by Volkswagen AG.

satelettronica

1J0 601 025 R, 1J0 601 025 AN - Wheel and tyre combination
⇒ page 420

Size:	$6^1/_2$ J x 16
Wheel offset in mm:	42
Wheel load in kg:	550

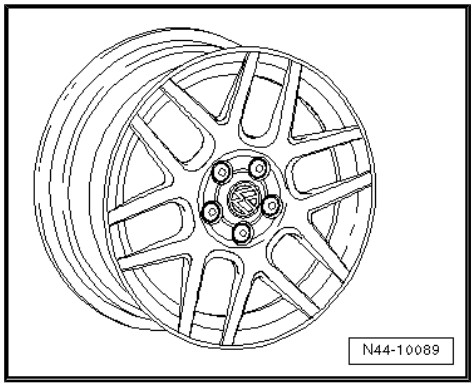

1J0 601 025 T, 1J0 601 025 AJ - Wheel and tyre combination
⇒ page 420

Size:	$6^1/_2$ J x 16
Wheel offset in mm:	42
Wheel load in kg:	550

For vehicles with 110 kW TDI and petrol engines 1.8l 132 kW, 2.3l 125 kW, 2.8l 150 kW

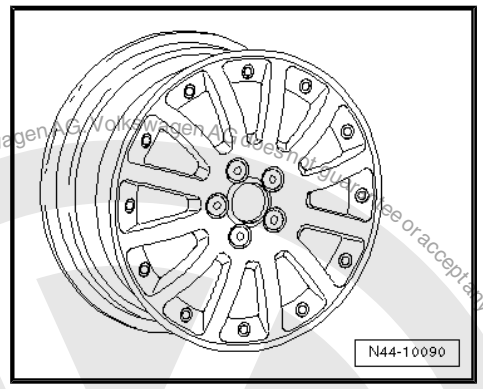

1J0 601 027 L, 1J0 601 027 R - Wheel and tyre combination
⇒ page 421

Size:	$6^1/_2$ J x 16
Wheel offset in mm:	42
Wheel load in kg:	550

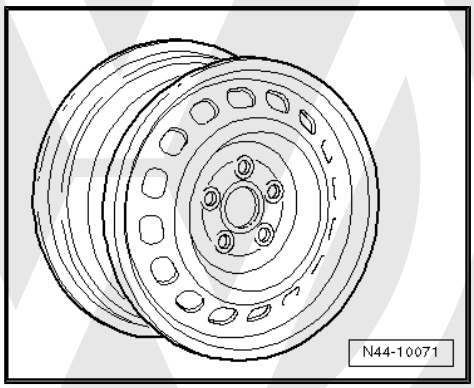

1J0 601 025 F, 1J0 601 025 AC - Wheel and tyre combination
⇒ page 421

Size:	$6^1/_2$ J x 16
Wheel offset in mm:	42
Wheel load in kg:	530

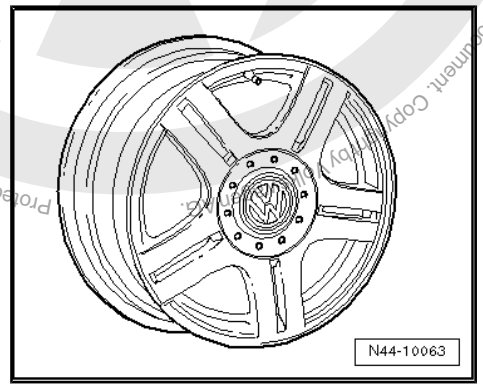

Protected by copyright. Copying for private or commercial purposes, in part or in whole, is not permitted unless authorised by Volkswagen AG. Volkswagen AG does not guarantee or accept any liability with respect to the correctness of information in this document. Copyright by Volkswagen AG.
satelettronica

1J0 601 025 L, 1J0 601 025 AE - Wheel and tyre combination
⇒ page 421

Size:	$6^1/_2$ J x 16
Wheel offset in mm:	42
Wheel load in kg:	550

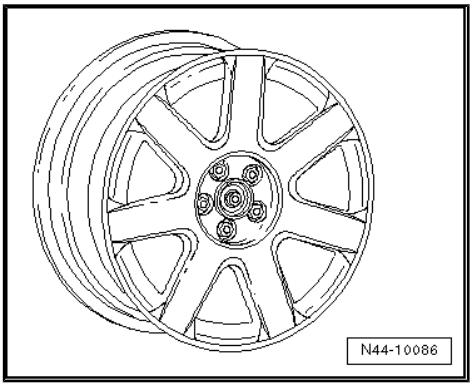

1J0 601 025 AN, 1J0 601 025 R - Wheel and tyre combination
⇒ page 421

Size:	$6^1/_2$ J x 16
Wheel offset in mm:	42
Wheel load in kg:	550

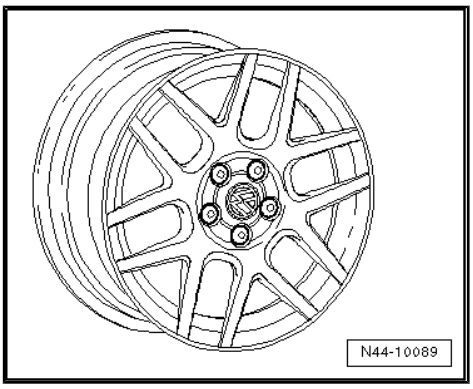

1J0 601 025 T, 1J0 601 025 AJ - Wheel and tyre combination
⇒ page 421

Size:	$6^1/_2$ J x 16
Wheel offset in mm:	42
Wheel load in kg:	550

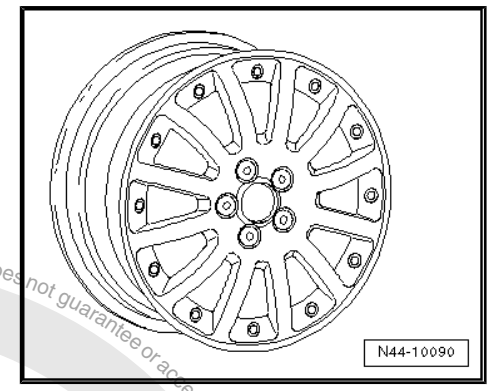

1C0 601 025 G - Wheel and tyre combination ⇒ page 421

Size:	$6^1/_2$ J x 16
Wheel offset in mm:	42
Wheel load in kg:	550

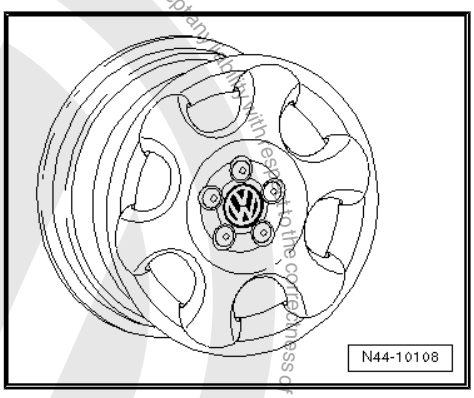

Protected by copyright. Copying for private or commercial purposes, in part or in whole is not permitted unless authorised by Volkswagen AG. Volkswagen AG does not guarantee or accept any liability with respect to the correctness of information in this document. Copyright by Volkswagen AG.
satelettronica

1C0 601 025 H - Wheel and tyre combination ⇒ page 421

Size:	$6^1/_2$ J x 16
Wheel offset in mm:	42
Wheel load in kg:	550

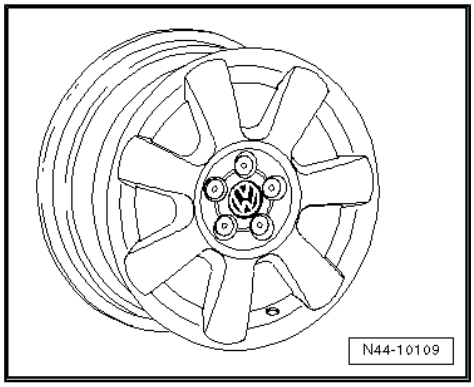

46.2.4 7 J x 17

The following wheels are permitted only if the stated conditions ⇒ page 433 are fulfilled.

> ⚠ **Caution**
>
> *Observe the allocation of wheels and tyres to the respective engines, which are listed in the overview table ⇒ page 419 .*

1J0 601 025 J, 1J0 601 025 S - Wheel and tyre combination ⇒ page 420

Size:	7 J x 17
Wheel offset in mm:	38
Wheel load in kg:	580

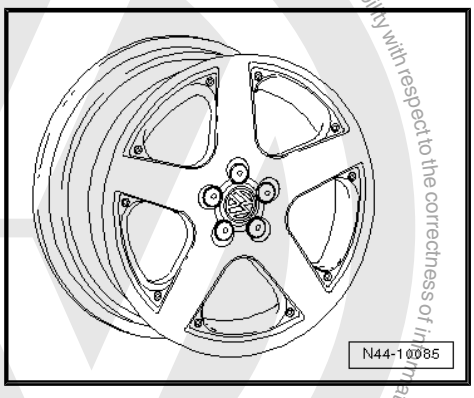

1J0 601 025 AB - Wheel and tyre combination ⇒ page 420

Size:	7 J x 17
Wheel offset in mm:	38
Wheel load in kg:	550

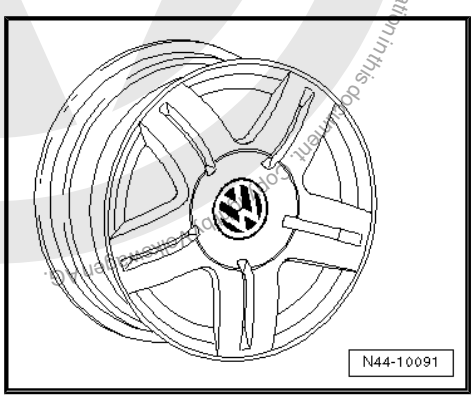

Protected by copyright. Copying for private or commercial purposes, in part or in whole, is not permitted unless authorised by Volkswagen AG. Volkswagen AG does not guarantee or accept any liability with respect to the correctness of information in this document. Copyright by Volkswagen AG.
satelettronica

1C0 601 025 B, 1C0 601 025 E - Wheel and tyre combination
⇒ page 420

Size:	7 J x 17
Wheel offset in mm:	38
Wheel load in kg:	550

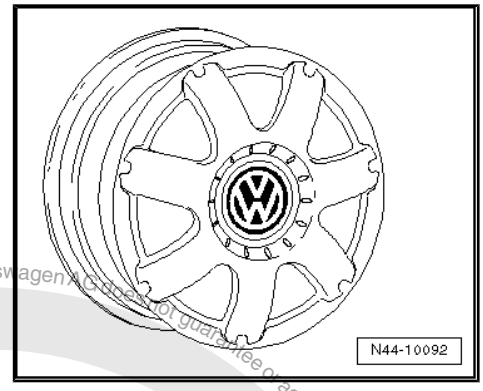

1C0 601 025 J - Wheel and tyre combination ⇒ page 420

Size:	7 J x 17
Wheel offset in mm:	38
Wheel load in kg:	550

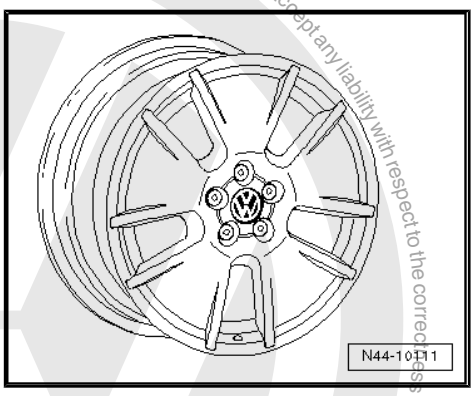

1C0 601 025 K, 1C0 601 025 Q - Wheel and tyre combination
⇒ page 420

Alloy disc-type wheels with exchangeable trim elements
⇒ page 60

Size:	7 J x 17
Wheel offset in mm:	38
Wheel load in kg:	550

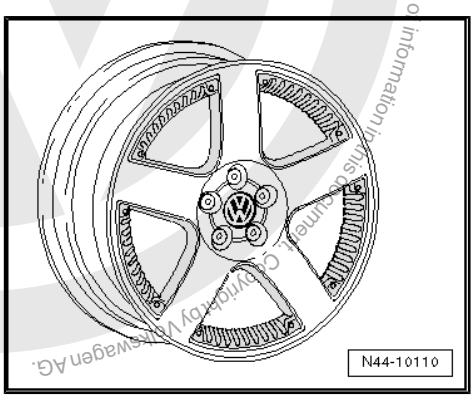

1J0 601 025 BE - Wheel and tyre combination ⇒ page 420

Size:	7 J x 17
Wheel offset in mm:	38
Wheel load in kg:	550

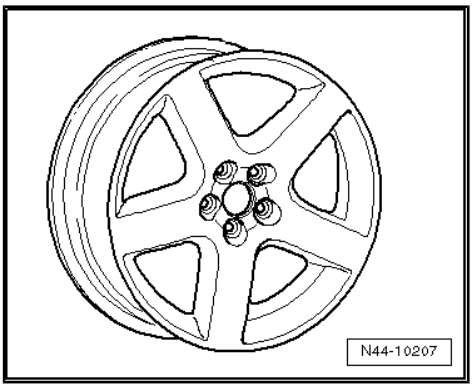

Protected by copyright. Copying for private or commercial purposes, in part or in whole, is not permitted unless authorised by Volkswagen AG. Volkswagen AG does not guarantee or accept any liability with respect to the correctness of information in this document. Copyright by Volkswagen AG.
satelettronica

1J0 601 025 AS - Wheel and tyre combination ⇒ page 420

Size:	7 J x 17
Wheel offset in mm:	38
Wheel load in kg:	550

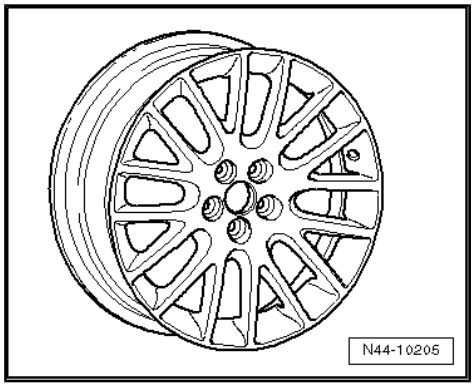

1C0 601 025 M - Wheel and tyre combination ⇒ page 420

Size:	7 J x 17
Wheel offset in mm:	38
Wheel load in kg:	550

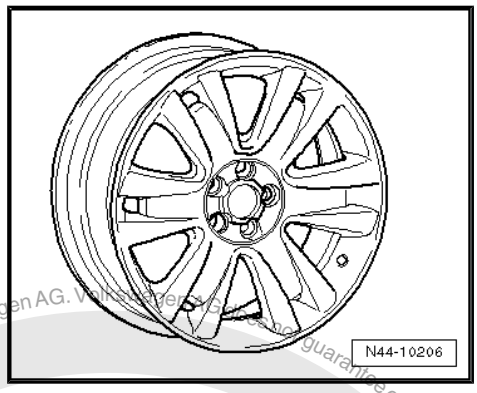

46.2.5 7 1/2 J x 17

The following wheels are permitted only if the stated conditions ⇒ page 433 **are fulfilled.**

> ⚠ **Caution**
>
> ***Observe the allocation of wheels and tyres to the respective engines, which are listed in the overview table*** ⇒ page 419 ***.***

1J0 601 025 BF - Wheel and tyre combination ⇒ page 420

Size:	7 1/2 J x 17
Wheel offset in mm:	38
Wheel load in kg:	550

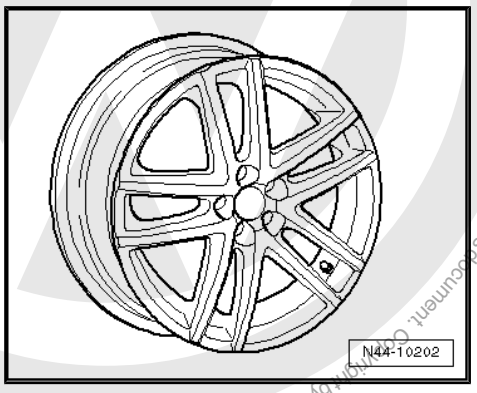

Protected by copyright. Copying for private or commercial purposes, in part or whole, is not permitted unless authorised by Volkswagen AG. Volkswagen AG does not guarantee or accept any liability with respect to the correctness of information in this document. Copyright by Volkswagen AG.
satelettronica

1J0 601 025 BH - Wheel and tyre combination ⇒ page 420

Size:	$7^1/_2$ J x 17
Wheel offset in mm:	38
Wheel load in kg:	560

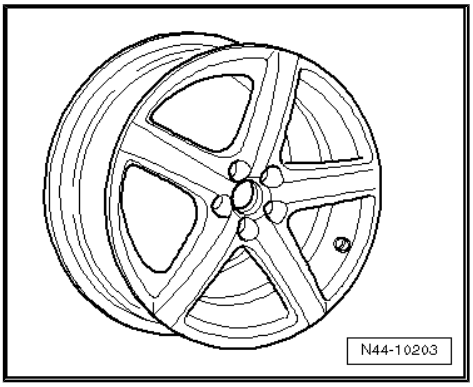

46.3 Conditions for fitting 17" wheels and tyres

17" wheels with 225/45 R 17 tyres are possible only:

1. For vehicles from model year 2001.

2. If 17" sports running gear and a steering box with reduced steering arm travel is installed in the vehicle

Allocation of steering box PR No. to engine:	
PR No. of steering box	**Engine**
QZ 3[11)]	1.8l; 2.0l; 2.3l petrol engines; 1.9l diesel engines
QZ 4[11)]	Up to and including 1.6l petrol engines
QZ 5[11)]	VR6 (US version); VR6 4Motion

11) Replacement part numbers ⇒ Electronic parts catalogue "ETKA"

3. If tyres with a maximum width of 218 mm are used.

4. If snow chains are not used.

Maximum width of 17" tyres

If a vehicle is retrofitted with 17" tyres or if existing 17" tyres are renewed, use only tyres with a maximum width -a- which does not exceed 218 mm during use [12)].

12) The measured width of the tyre including lettering on 7 J x 17 or $7^1/_2$ J x 17 and at the specified tyre pressure.

If wider tyres are used, under certain circumstances, the tyres may contact the front axle and the bodywork while the car is being driven.

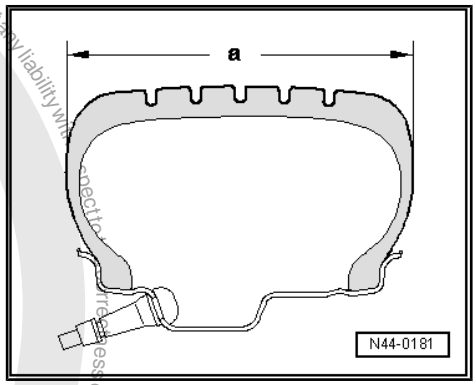

Protected by copyright. Copyright for private or commercial purposes, in part or in whole is not permitted unless authorised by Volkswagen AG. Volkswagen AG does not guarantee or accept any liability with respect to the correctness of information in this document. Copyright by Volkswagen AG.
satelettronica

47 New Beetle from model year 1999

General

Volkswagen vehicles are built according to the latest findings in safety engineering. To keep it that way, we recommend the use of only genuine Volkswagen spare parts. You can recognise this by the VW Audi logo and by the part number. It has been established that these parts are reliable, safe and suitable.

Despite constant appraisal of the market, we cannot assess other products on these points, even when in isolated cases they have been passed by official inspectors or have been granted official approval. Therefore, we cannot, of course, assume any liability if these products are installed.

> ⚠ **WARNING**
>
> *The products from Volkswagen genuine parts and Volkswagen genuine accessories may differ in fitting requirements, torque specifications and so on.*
>
> *Always follow the respective fitting and operating instructions.*

The wheel and tyre combinations or changes listed in the vehicle tables refer exclusively to Volkswagen Genuine wheels. Approval of wheel and tyre combinations or a change to wheels from the accessories trade is not possible with the parts certificate attached here.

> ⚠ **WARNING**
>
> *The fitting instructions and torque specifications for wheels from Volkswagen genuine accessories may differ from those intended for wheels from Volkswagen genuine parts.*
>
> *Therefore, always observe the torque settings for the wheel bolts as well as the respective fitting and operating instructions.*

47.1 New Beetle, type 9C model year 1999 to model year 2010

Appendix for parts certificate 3808/09

The parts certificate can be found on the Volkswagen ServiceNet under Accessories/Tyres, Wheels and Tyres, Wheels and Tyres Guide.

Type Approval No.: e1*97/27*0106*00

Type Approval No.: e1*98/14*0106*01 to e1*98/14*0106*13

Type Approval No.: e1*2001/116*0106*14 to e1*2001/116*0106*26

Overview

Model engine output	Tyres	Tyre size	Wheel rim	Off-set in mm	Snow chains	Remarks
1.4l 55 kW petrol engine	Standard tyres	195/65 R 15 91T	6 J x 15 ⇒ page 437	38	Yes	General information on: ♦ Winter tyres ⇒ page 15 ♦ Snow chains ⇒ page 18

Volkswagen AG does not guarantee or accept any liability with respect to the correctness of information in this document. Copyright by Volkswagen AG. Protected by copyright. Copying for private or commercial purposes, in part or in whole, is not permitted unless authorised by Volkswagen AG.
satelettronica

Model engine output	Tyres	Tyre size	Wheel rim	Off-set in mm	Snow chains	Remarks
	Modification	205/55 R 16 91H	$6^1/_2$ J x 16 ⇒ page 440	42	No	Tyre makes recommended by Volkswagen: ◆ Summer tyres ⇒ page 657 ◆ All-season tyres ⇒ page 672 ◆ Winter tyres ⇒ page 689
		225/45 R 17 91W	7 J x 17 ⇒ page 445	38	No	
	Winter tyres	195/65 R 15 91Q/T	6 J x 15 ⇒ page 437	38	Yes	
		205/55 R 16 91T/H	$5^1/_2$ J x 16 ⇒ page 439	36	Yes	
1.9l 66 kW TDI	Standard tyres	195/65 R 15 91T	6 J x 15 ⇒ page 437	38	Yes	The 225/45 R 17 tyre may be mounted on the 7 J x 17 or the $7^1/_2$ J x 17 rim only if the listed conditions ⇒ page 448 are fulfilled!
	Modification	205/55 R 16 91H	$6^1/_2$ J x 16 ⇒ page 440	42	No	
		225/45 R 17 91W	7 J x 17 ⇒ page 445	38	No	
		225/45 R 17 91W	$7^1/_2$ J x 17 ⇒ page 448	38	No	
	Winter tyres	195/65 R 15 91Q/T	6 J x 15 ⇒ page 437	38	Yes	
		205/55 R 16 91T/H	$5^1/_2$ J x 16 ⇒ page 439	36	Yes	
1.6l 74 kW; 2.0l 85 kW; petrol engines	Standard tyres	195/65 R15 91H	6 J x 15 ⇒ page 437	38	Yes	The adhesive weights for balancing must be attached to the inner side of the rim of $6^1/_2$ J x 16 aluminium wheels!
	Modification	205/55 R 16 91H	$6^1/_2$ J x 16 ⇒ page 440	42	No	
		225/45 R 17 91W	7 J x 17 ⇒ page 445	38	No	
		225/45 R 17 91W	$7^1/_2$ J x 17 ⇒ page 448	38	No	

Volkswagen AG. Volkswagen AG does not guarantee or accept any liability with respect to the correctness of information in this document. Copyright by Volkswagen AG.
Reproduced by copyright. Copying for private or commercial purposes, in part or in whole, is not permitted unless authorised by Volkswagen AG.
satelettronica

Model engine output	Tyres	Tyre size	Wheel rim	Off-set in mm	Snow chains	Remarks
	Winter tyres	195/65 R 15 91Q/T	6 J x 15 ⇒ page 437	38	Yes	
		205/55 R 16 91T/H	5 1/2 J x 16 ⇒ page 439	36	Yes	
1.6l 75 kW petrol engine* ⇒ page 436	Standard tyres	195/65 R15 91H	6 J x 15 ⇒ page 437	38	Yes	* From type approval number: e1*98/14*0106*04
1.9l 74 kW** ⇒ page 436 ; 1.9l 77 kW diesel engine	Modification	195/65 R15 91T	6 J x 15 ⇒ page 437	38	Yes	* From type approval number: e1*98/14*0106*05
		205/55 R 16 91H	6 1/2 J x 16 ⇒ page 440	42	No	
		225/45 R 17 91W	7 J x 17 ⇒ page 445	38	No	
		225/45 R 17 91W	7 1/2 J x 17 ⇒ page 448	38	No	
	Winter tyres	195/65 R 15 91Q/T	6 J x 15 ⇒ page 437	38	Yes	
		205/55 R 16 91T/H	5 1/2 J x 16 ⇒ page 439	36	Yes	
1.8l 110 kW petrol engine	Standard tyres	195/65 R15 91V	6 J x 15 ⇒ page 437	38	Yes	
	Modification	205/55 R 16 91V	6 1/2 J x 16 ⇒ page 440	42	No	
		225/45 R 17 91W	7 J x 17 ⇒ page 445	38	No	
		225/45 R 17 91W	7 1/2 J x 17 ⇒ page 448	38	No	
	Winter tyres	195/65 R 15 91Q/T	6 J x 15 ⇒ page 437	38	Yes	
		205/55 R 16 91T/H	5 1/2 J x 16 ⇒ page 439	36	Yes	
2.3l 125 kW petrol engine	Standard tyres	205/55 R 16 91W	6 1/2 J x 16 ⇒ page 440	42	No	
	Modification	205/55 R 16 91V	6 1/2 J x 16 ⇒ page 440	42	No	
		225/45 R 17 91W	7 J x 17 ⇒ page 445	38	No	

Protected by copyright. Copyright by Volkswagen AG. Volkswagen AG does not guarantee or accept any liability with respect to the correctness of information in this document. Copyright by Volkswagen AG. Protected by copyright. Copying for private or commercial purposes, in part or in whole, is not permitted unless authorised by Volkswagen AG.

satelettronica

Model engine output	Tyres	Tyre size	Wheel rim	Off-set in mm	Snow chains	Remarks
		225/45 R 17 91W	$7^1/_2$ J x 17 ⇒ page 448	38	No	
	Winter tyres	205/55 R 16 91T/H	$5^1/_2$ J x 16 ⇒ page 439	36	Yes*** ⇒ page 437	*** Snow chains: Only the listed snow chains are approved! Article No. ⇒ page 437

Tyre pressure information is located on the tyre pressure plate on the inside of the tank flap or on the driver side B-pillar.

Approved snow chains for New Beetle 2.3l 125 kW

The following snow chains are only permissible in combination with the adjacent wheel and tyre combination!

Chain manufacturer Item no.	Accessory part number	Tyre size	Wheel rim	Part no.
Rud 460 22	000 091 386 D	205/55 R 16 91T/H	$5^1/_2$ J x 16 offset 36	1J0 601 025 M 1J0 601 025 AF 1J0 601 025 AP
Ottinger 100 905	-			

47.2 Wheel allocation for New Beetle, type 9C model year 1999 to model year 2010

Explanation of information on wheels ⇒ page 59

Torque settings for wheel bolts ⇒ Running gear, axles, steering; Rep. gr. 44 ; Torque settings for wheel bolts

Pitch circle diameter:	100 mm
Number of wheel bolt holes:	5

47.2.1 6 J x 15

Caution

Observe the allocation of wheels and tyres to the respective engines, which are listed in the overview table ⇒ page 434 .

1J0 601 025 B, 1J0 601 025 AA - Wheel and tyre combination ⇒ page 434

For vehicles with maximum permitted axle load of 1,000 kg

Size:	6 J x 15
Wheel offset in mm:	38
Wheel load in kg:	500

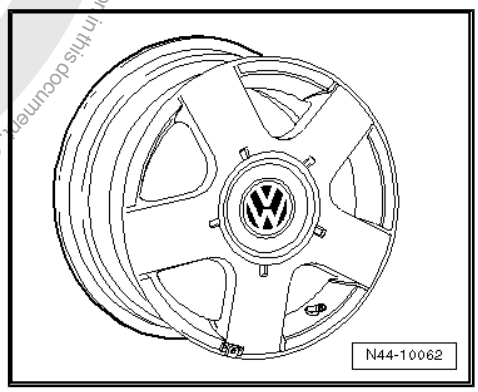

Protected by copyright. Copyright by Volkswagen AG. Volkswagen AG does not guarantee or accept any liability with respect to the correctness of information in this document. Copyright by Volkswagen AG.
satelettronica

1J0 601 027 K - Wheel and tyre combination ⇒ page 434

Size:	6 J x 15
Wheel offset in mm:	38
Wheel load in kg:	550

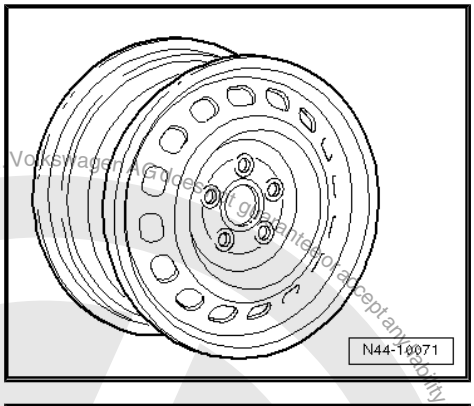

1J0 601 027 H, 1J0 601 027 Q - Wheel and tyre combination ⇒ page 434

Size:	6 J x 15
Wheel offset in mm:	38
Wheel load in kg:	550

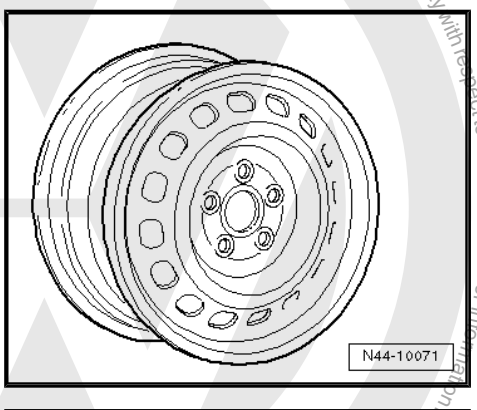

1J0 601 027 AB - Wheel and tyre combination ⇒ page 434

Size:	6 J x 15
Wheel offset in mm:	38
Wheel load in kg:	550

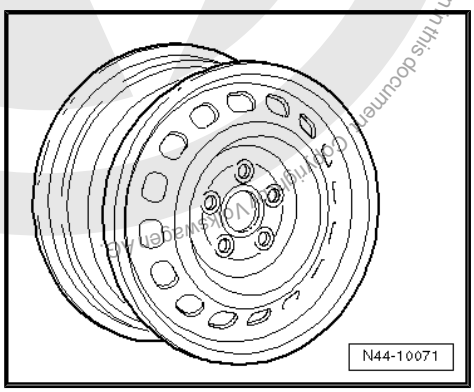

1J0 601 025 Q - Wheel and tyre combination ⇒ page 434

Size:	6 J x 15
Wheel offset in mm:	38
Wheel load in kg:	530

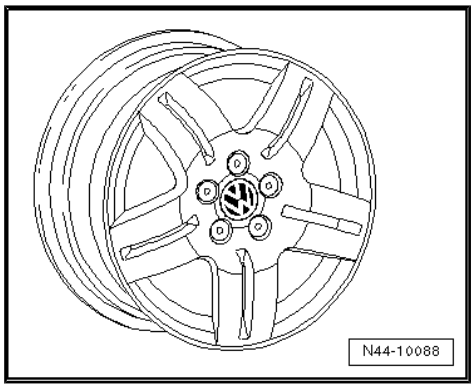

Protected by copyright. Copying for private or commercial purposes, in part or in whole, is not permitted unless authorised by Volkswagen AG. Volkswagen AG does not guarantee or accept any liability with respect to the correctness of information in this document. Copyright by Volkswagen AG.

satelettronica

1C0 601 025 F - Wheel and tyre combination ⇒ page 434

Size:	6 J x 15
Wheel offset in mm:	38
Wheel load in kg:	550

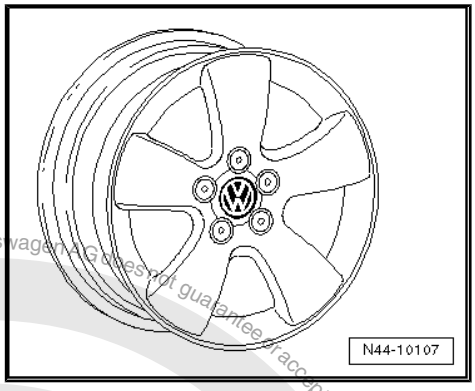

1J0 601 025 P, 1J0 601 025 AL - Wheel and tyre combination
⇒ page 434

Size:	6 J x 15
Wheel offset in mm:	38
Wheel load in kg:	550

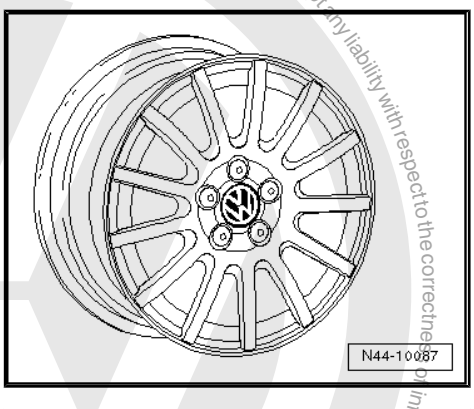

1J0 601 025 BD - Wheel and tyre combination ⇒ page 434

Size:	6 J x 15
Wheel offset in mm:	38
Wheel load in kg:	580

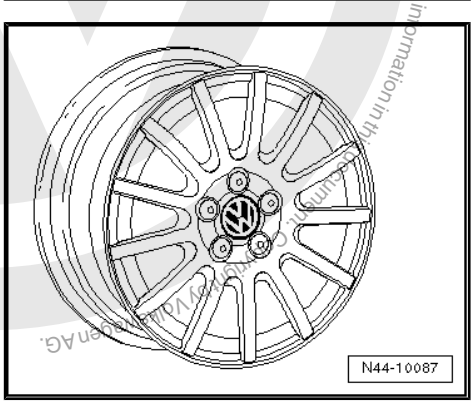

47.2.2 5 1/2 J x 16

Caution

Observe the allocation of wheels and tyres to the respective engines, which are listed in the overview table ⇒ page 434 *.*

Protected by copyright. Copying for private or commercial purposes, in part or in whole, is not permitted unless authorised by Volkswagen AG. Volkswagen AG does not guarantee or accept any liability with respect to the correctness of information in this document. Copyright by Volkswagen AG.
satelettronica

Winter wheels

1J0 601 025 M, 1J0 601 025 AF - Wheel and tyre combination
⇒ page 435

Size:	$5^1/_2$ J x 16
Wheel offset in mm:	36
Wheel load in kg:	550

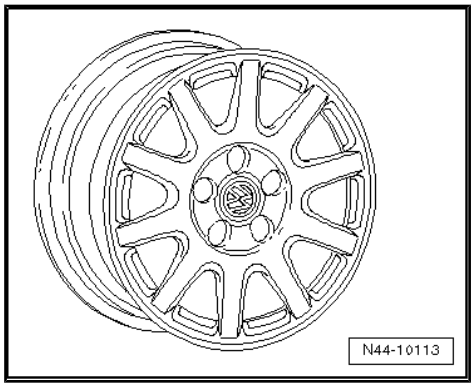

47.2.3 $6^1/_2$ J x 16

Caution

Observe the allocation of wheels and tyres to the respective engines, which are listed in the overview table *⇒ page 434* *.*

1C0 601 025 A, 1C0 601 025 D - Wheel and tyre combination
⇒ page 435

For vehicles with maximum permitted axle load of 1,000 kg

Size:	$6^1/_2$ J x 16
Wheel offset in mm:	42
Wheel load in kg:	500

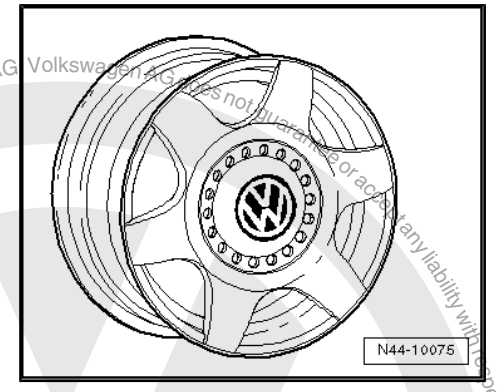

1C0 601 025 AH - Wheel and tyre combination ⇒ page 435

Size:	$6^1/_2$ J x 16
Wheel offset in mm:	42
Wheel load in kg:	550

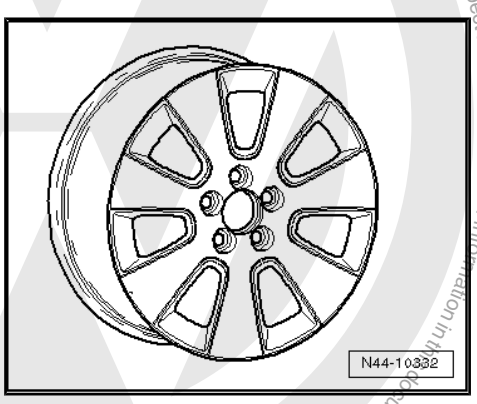

Protected by copyright. Copying for private or commercial purposes, in part or whole, is not permitted unless authorised by Volkswagen AG. Volkswagen AG does not guarantee or accept any liability with respect to the correctness of information in this document. Copyright by Volkswagen AG.
satelettronica

1J0 601 027 L, 1J0 601 027 R - Wheel and tyre combination
⇒ page 435

Size:	$6^1/_2$ J x 16
Wheel offset in mm:	42
Wheel load in kg:	550

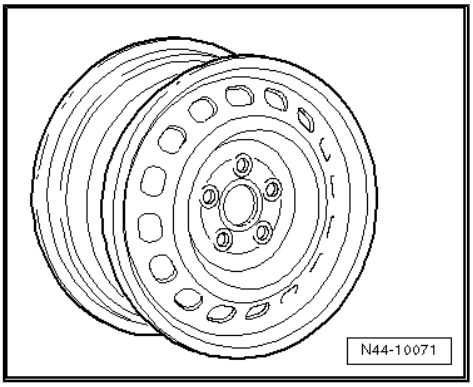

1J0 601 027 T, 1J0 601 027 AF - Wheel and tyre combination
⇒ page 435

Size:	$6^1/_2$ J x 16
Wheel offset in mm:	42
Wheel load in kg:	550

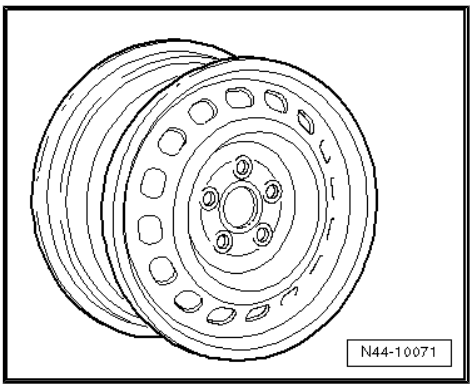

1J0 601 025 F, 1J0 601 025 AC - Wheel and tyre combination
⇒ page 435

Size:	$6^1/_2$ J x 16
Wheel offset in mm:	42
Wheel load in kg:	530

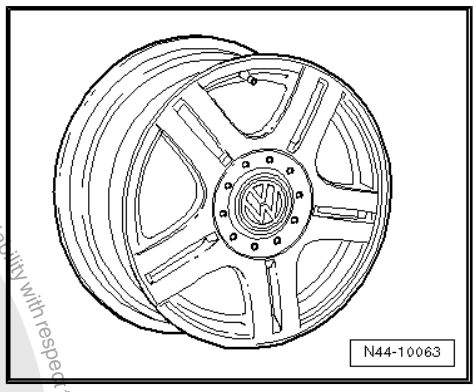

1J0 601 025 E, 1J0 601 025 AD - Wheel and tyre combination
⇒ page 435

Size:	$6^1/_2$ J x 16
Wheel offset in mm:	42
Wheel load in kg:	530

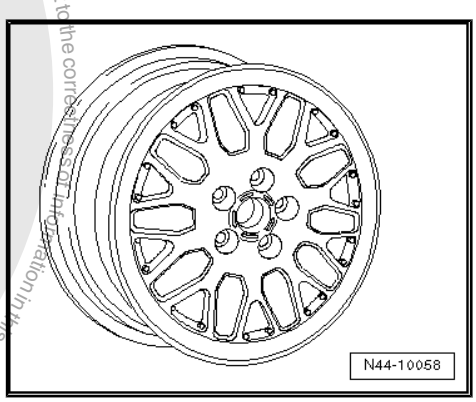

Protected by copyright. Copying for private or commercial purposes, in part or in whole, is not permitted unless authorised by Volkswagen AG. Volkswagen AG does not guarantee or accept any liability with respect to the correctness of information in this document. Copyright by Volkswagen AG.
satelettronica

1J0 601 025 H, 1J0 601 025 AH - Wheel and tyre combination
⇒ page 435

Size:	$6^1/_2$ J x 16
Wheel offset in mm:	42
Wheel load in kg:	530

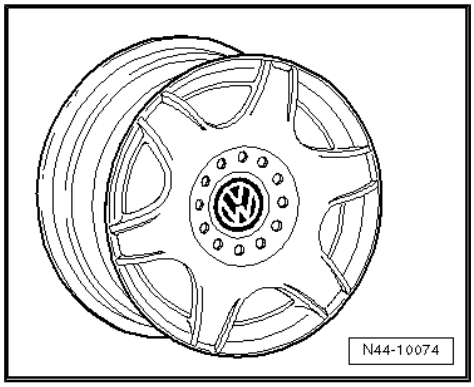

1J0 601 025 L, 1J0 601 025 AE - Wheel and tyre combination
⇒ page 435

Size:	$6^1/_2$ J x 16
Wheel offset in mm:	42
Wheel load in kg:	550

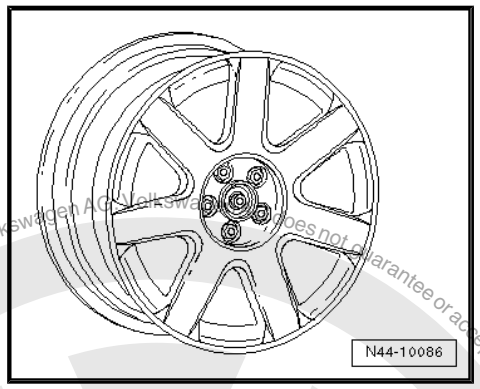

1J0 601 025 R, 1J0 601 025 AN - Wheel and tyre combination
⇒ page 435

Size:	$6^1/_2$ J x 16
Wheel offset in mm:	42
Wheel load in kg:	550

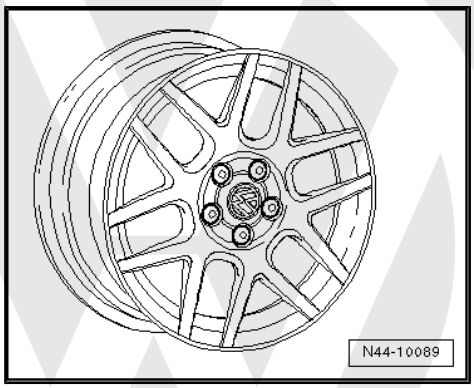

1J0 601 025 T, 1J0 601 025 AJ - Wheel and tyre combination
⇒ page 435

Size:	$6^1/_2$ J x 16
Wheel offset in mm:	42
Wheel load in kg:	550

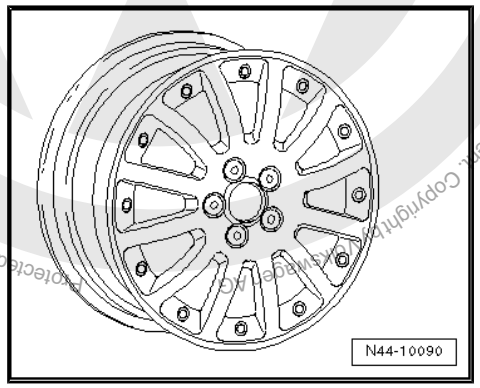

Protected by copyright. Copyright by Volkswagen AG, Wolfsburg. Copying for private or commercial purposes, in part or in whole, is not permitted unless authorised by Volkswagen AG. Volkswagen AG does not guarantee or accept any liability with respect to the correctness of information in this document.
satelettronica

1C0 601 025 G, 1C0 601 025 AA - Wheel and tyre combination ⇒ page 435

Size:	$6^1/_2$ J x 16
Wheel offset in mm:	42
Wheel load in kg:	550

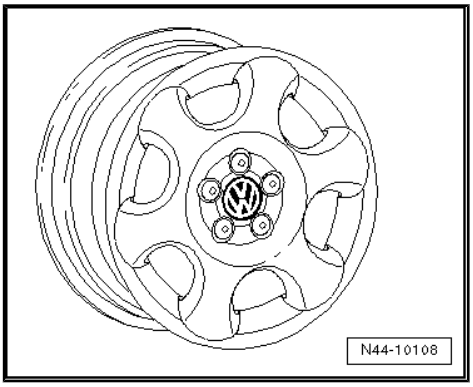

1C0 601 025 H - Wheel and tyre combination ⇒ page 435

Size:	$6^1/_2$ J x 16
Wheel offset in mm:	42
Wheel load in kg:	550

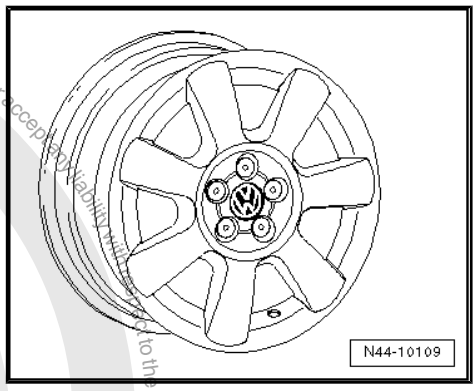

1C0 601 025 N - Wheel and tyre combination ⇒ page 435

Size:	$6^1/_2$ J x 16
Wheel offset in mm:	42
Wheel load in kg:	550

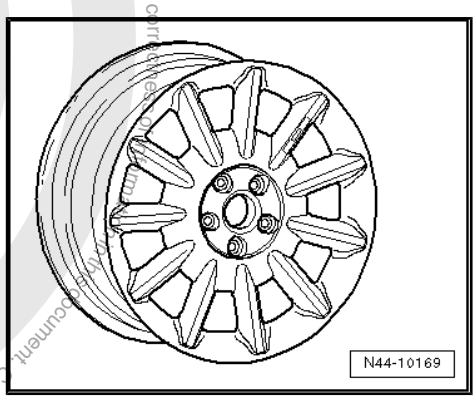

1C0 601 025 P - Wheel and tyre combination ⇒ page 435

Size:	$6^1/_2$ J x 16
Wheel offset in mm:	42
Wheel load in kg:	550

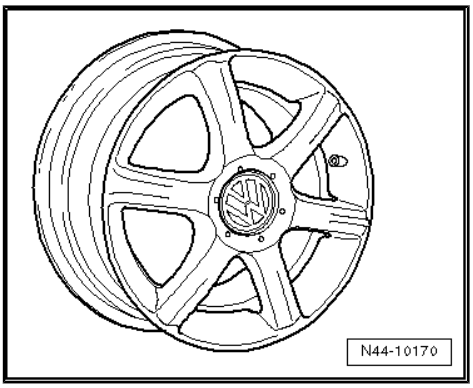

Protected by copyright. Copying for private or commercial purposes, in part or in whole, is not permitted unless authorised by Volkswagen AG. Volkswagen AG does not guarantee or accept any liability with respect to the correctness and completeness of this document. Copyright by Volkswagen AG.
satelettronica

1C0 601 025 T - Wheel and tyre combination ⇒ page 435

Size:	$6^1/_2$ J x 16
Wheel offset in mm:	42
Wheel load in kg:	550

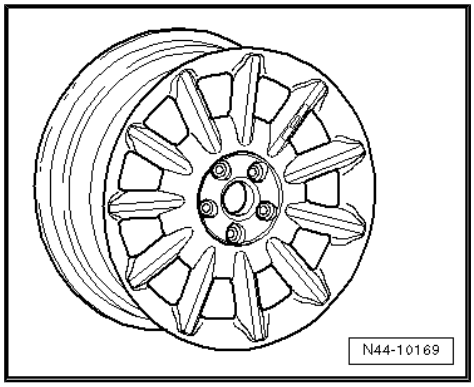

1C0 601 025 AB - Wheel and tyre combination ⇒ page 435

Size:	$6^1/_2$ J x 16
Wheel offset in mm:	42
Wheel load in kg:	550

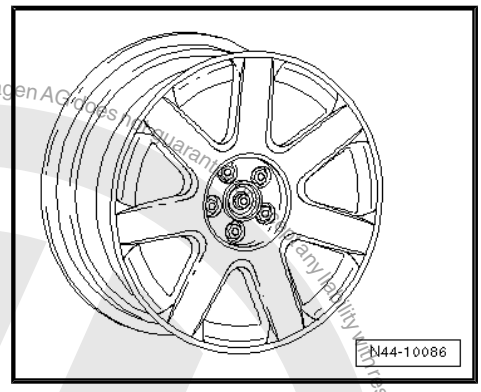

1C0 601 025 AC, 1C0 601 025 AF - Wheel and tyre combination ⇒ page 435

Size:	$6^1/_2$ J x 16
Wheel offset in mm:	42
Wheel load in kg:	550

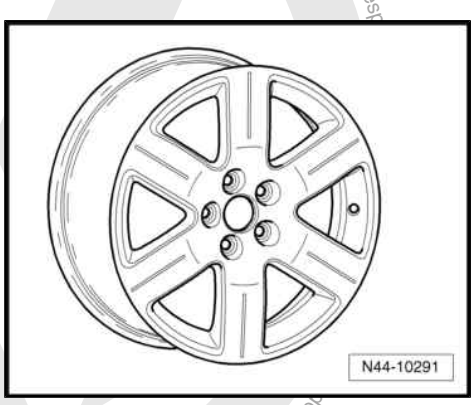

1C0 601 025 AJ - Wheel and tyre combination ⇒ page 435

Size:	$6^1/_2$ J x 16
Wheel offset in mm:	42
Wheel load in kg:	550

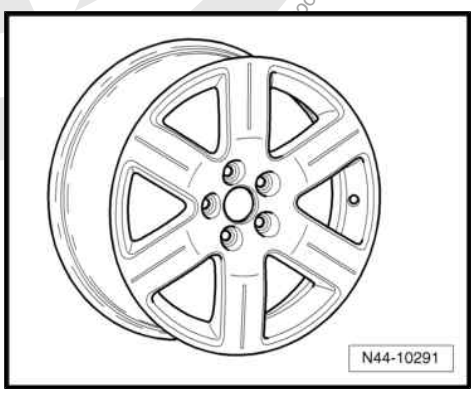

Protected by copyright. Copying for private or commercial purposes, in part or in whole, is not permitted unless authorised by Volkswagen AG. Volkswagen AG does not guarantee or assume any liability with respect to the accuracy, completeness and timeliness of the information.
satelettronica

47.2.4 7 J x 17

The following wheels are permitted only if the stated conditions ⇒ page 448 are fulfilled.

> ⚠ **Caution**
>
> *Observe the allocation of wheels and tyres to the respective engines, which are listed in the overview table ⇒ page 434 .*

1J0 601 025 J, 1J0 601 025 S - Wheel and tyre combination ⇒ page 435

Size:	7 J x 17
Wheel offset in mm:	38
Wheel load in kg:	580

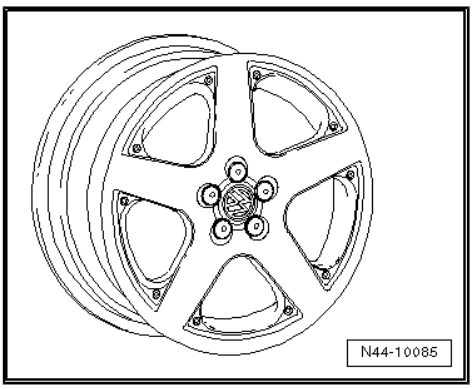

1J0 601 025 AB - Wheel and tyre combination ⇒ page 435

Size:	7 J x 17
Wheel offset in mm:	38
Wheel load in kg:	550

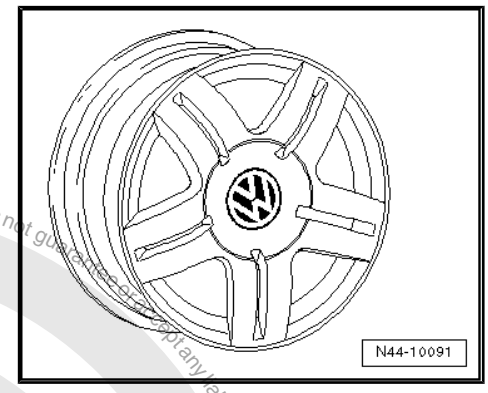

1C0 601 025 AE - Wheel and tyre combination ⇒ page 435

Size:	7 J x 17
Wheel offset in mm:	38
Wheel load in kg:	550

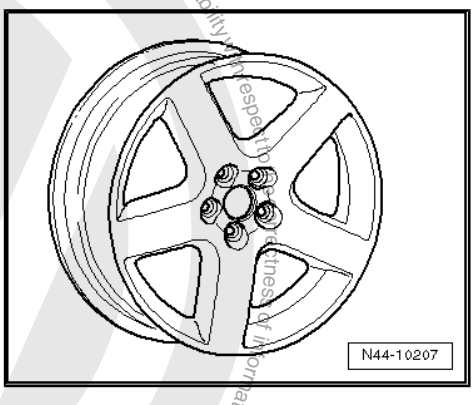

Protected by copyright. Copying for private or commercial purposes, in part or in whole, is not permitted unless authorised by Volkswagen AG. Volkswagen AG does not guarantee or accept any liability with respect to the correctness of information in this document. Copyright by Volkswagen AG.
satelettronica

1C0 601 025 AG - Wheel and tyre combination ⇒ page 435

Size:	7 J x 17
Wheel offset in mm:	38
Wheel load in kg:	550

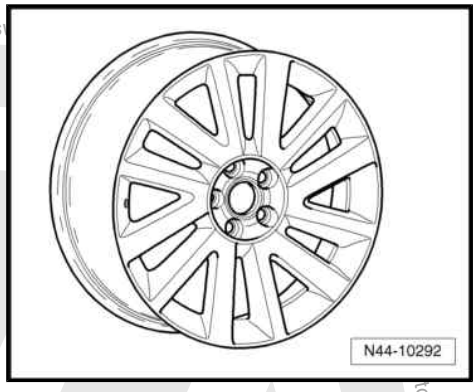

1C0 601 025 B, 1C0 601 025 E - Wheel and tyre combination ⇒ page 435

Size:	7 J x 17
Wheel offset in mm:	38
Wheel load in kg:	550

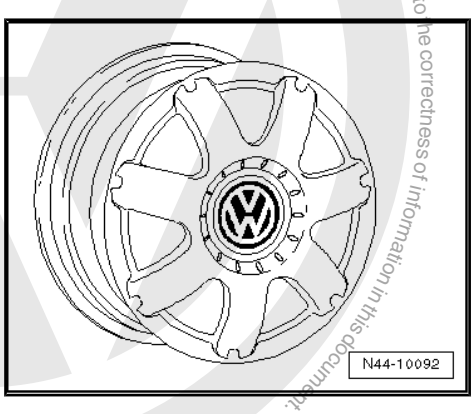

1C0 601 025 J - Wheel and tyre combination ⇒ page 435

Size:	7 J x 17
Wheel offset in mm:	38
Wheel load in kg:	550

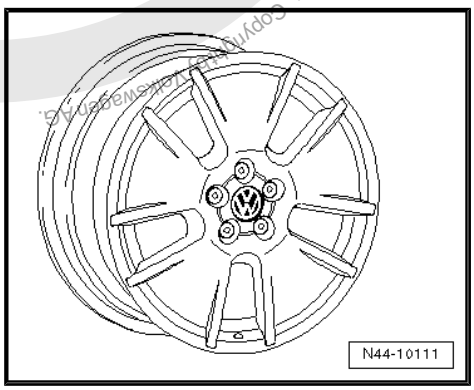

1C0 601 025 K, 1C0 601 025 Q - Wheel and tyre combination ⇒ page 435

Alloy disc-type wheels with exchangeable trim elements ⇒ page 60

Size:	7 J x 17
Wheel offset in mm:	38
Wheel load in kg:	550

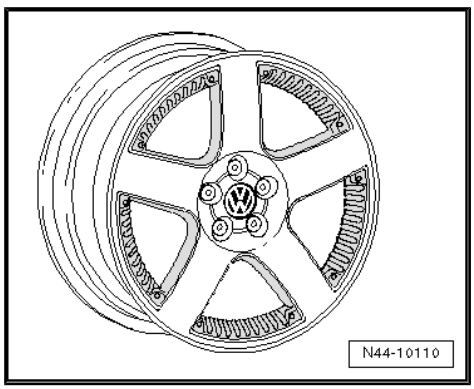

Protected by copyright. Copying for private or commercial purposes, in part or in whole, is not permitted unless authorised by Volkswagen AG. Volkswagen AG does not guarantee or accept any liability with respect to the correctness of information in this document. Copyright by Volkswagen AG.
satelettronica

Protected by copyright. Copyright by Volkswagen AG.

1J0 601 025 AS - Wheel and tyre combination ⇒ page 435

Size:	7 J x 17
Wheel offset in mm:	38
Wheel load in kg:	550

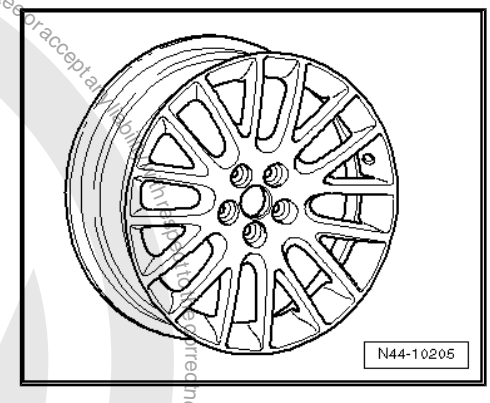

1C0 601 025 M - Wheel and tyre combination ⇒ page 435

Size:	7 J x 17
Wheel offset in mm:	38
Wheel load in kg:	550

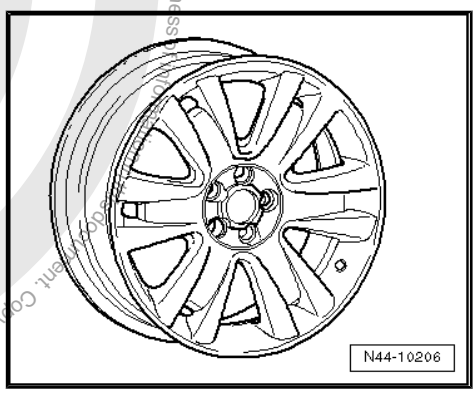

1C0 601 025 R - Wheel and tyre combination ⇒ page 435

Size:	7 J x 17
Wheel offset in mm:	38
Wheel load in kg:	550

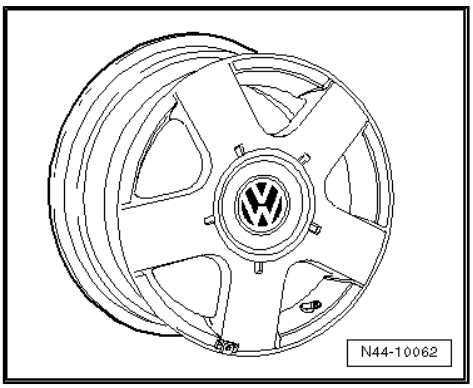

1J0 601 025 BE - Wheel and tyre combination ⇒ page 435

Size:	7 J x 17
Wheel offset in mm:	38
Wheel load in kg:	550

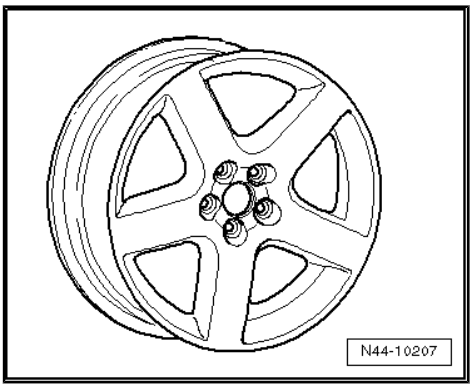

satelettronica

47.2.5 7 1/2 J x 17

The following wheels are permitted only if the stated conditions ⇒ page 448 are fulfilled.

> **Caution**
>
> *Observe the allocation of wheels and tyres to the respective engines, which are listed in the overview table ⇒ page 434 .*

1J0 601 025 BF - Wheel and tyre combination ⇒ page 435

Size:	7 1/2 J x 17
Wheel offset in mm:	38
Wheel load in kg:	550

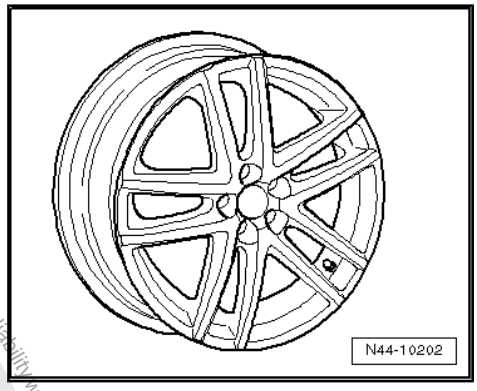

1J0 601 025 BH - Wheel and tyre combination ⇒ page 435

Size:	7 1/2 J x 17
Wheel offset in mm:	38
Wheel load in kg:	560

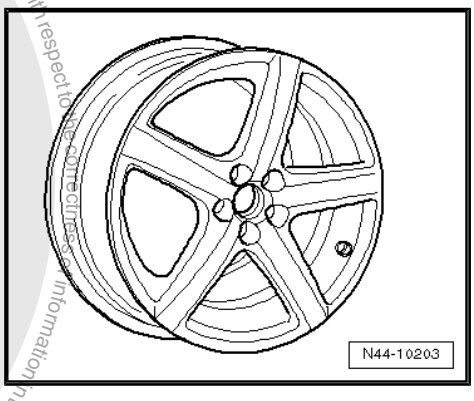

47.3 Conditions for fitting 17" wheels and tyres

17" wheels with 225/45 R 17 tyres are possible only:

1. For vehicles from model year 2001.

2. If 17" sports running gear and a steering box with reduced steering arm travel is installed in the vehicle

Allocation of steering box PR No. to engine:	
PR No. of steering box	**Engine**
QZ 3[13)]	1.8l; 2.0l; 2.3l petrol engines; 1.9l diesel engines
QZ 4[13)]	Up to and including 1.6l petrol engines

13) Replacement part numbers ⇒ Electronic parts catalogue “ETKA”

3. If tyres with a maximum width of 218 mm are used.

Copyright by Volkswagen AG. Volkswagen AG does not guarantee or accept any liability with respect to the correctness of information in this document. Copying for private or commercial purposes, in part or in whole, is not permitted unless authorised by Volkswagen AG.

satelettronica

4. If snow chains are not used.

Maximum width of 17" tyres

If a vehicle is retrofitted with 17" tyres or if existing 17" tyres are renewed, use only tyres with a maximum width -a- which does not exceed 218 mm during use [14].

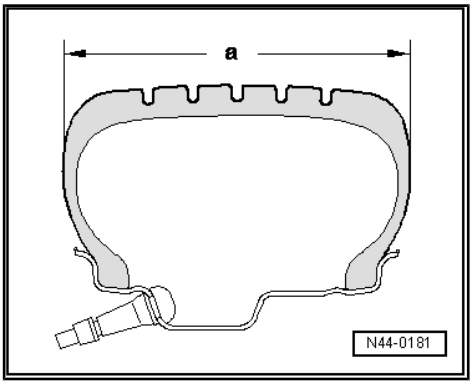

14) The measured width of the tyre including lettering on 7 J x 17 or $7^1/_2$ J x 17 and at the specified tyre pressure.

If wider tyres are used, under certain circumstances, the tyres may contact the front axle and the bodywork while the car is being driven.

Protected by copyright. Copying for private or commercial purposes, in part or in whole, is not permitted unless authorised by Volkswagen AG. Volkswagen AG does not guarantee or accept any liability with respect to the correctness of information in this document. Copyright by Volkswagen AG.

satelettronica

© Volkswagen AG. Volkswagen AG does not guarantee or accept any liability with respect to the correctness of information in this document. Copyright by Volkswagen AG. Protected by copyright. Reproduction, in whole or in part, is not permitted unless authorised.

48 New Beetle Cabriolet from model year 2003

General

Volkswagen vehicles are built according to the latest findings in safety engineering. To keep it that way, we recommend the use of only genuine Volkswagen spare parts. You can recognise this by the VW Audi logo and by the part number. It has been established that these parts are reliable, safe and suitable.

Despite constant appraisal of the market, we cannot assess other products on these points, even when in isolated cases they have been passed by official inspectors or have been granted official approval. Therefore, we cannot, of course, assume any liability if these products are installed.

> ⚠ **WARNING**
>
> *The products from Volkswagen genuine parts and Volkswagen genuine accessories may differ in fitting requirements, torque specifications and so on.*
>
> *Always follow the respective fitting and operating instructions.*

The wheel and tyre combinations or changes listed in the vehicle tables refer exclusively to Volkswagen Genuine wheels. Approval of wheel and tyre combinations or a change to wheels from the accessories trade is not possible with the parts certificate attached here.

> ⚠ **WARNING**
>
> *The fitting instructions and torque specifications for wheels from Volkswagen genuine accessories may differ from those intended for wheels from Volkswagen genuine parts.*
>
> *Therefore, always observe the torque settings for the wheel bolts as well as the respective fitting and operating instructions.*

48.1 New Beetle Cabriolet, type 1Y model year 2003 to model year 2010

Appendix for parts certificate 3808/09

The parts certificate can be found on the Volkswagen ServiceNet under Accessories/Tyres, Wheels and Tyres, Wheels and Tyres Guide.

Type Approval No.: e1*2001/116*0205*00 to e1*2001/116*0205*16

Overview

Model engine output	Tyres	Tyre size	Wheel rim	Off-set in mm	Snow chains	Remarks
1.4l 55 kW petrol engine	Standard tyres	195/65 R 15 91T	6 J x 15 ⇒ page 452	38	Yes	General information on: ◆ Winter tyres ⇒ page 15 ◆ Snow chains ⇒ page 18

satelettronica

Model engine output	Tyres	Tyre size	Wheel rim	Off-set in mm	Snow chains	Remarks
	Modification	205/55 R 16 91H	$6^1/_2$ J x 16 ⇒ page 455	42	No	Tyre makes recommended by Volkswagen: ◆ Summer tyres ⇒ page 658 ◆ All-season tyres ⇒ page 673 ◆ Winter tyres ⇒ page 689
		225/45 R 17 91V/W	7 J x 17 ⇒ page 460	38	No	
	Winter tyres	195/65 R 15 91Q/T	6 J x 15 ⇒ page 452	38	Yes	
		205/55 R 16 91T	$5^1/_2$ J x 16 ⇒ page 454	36	Yes	
1.6l 75 kW petrol engine;	Standard tyres	195/65 R 15 91T	6 J x 15 ⇒ page 452	38	Yes	The 225/45 R 17 tyre may be mounted on the 7 J x 17 or the $7^1/_2$ J x 17 rim only if the listed conditions ⇒ page 463 are fulfilled!
1.9l 74 kW; 1.9l 77 kW diesel engine	Modification	205/55 R 16 91H	$6^1/_2$ J x 16 ⇒ page 455	42	No	The adhesive weights for balancing must be attached to the inner side of the rim of $6^1/_2$ J x 16 aluminium wheels!
		225/45 R 17 91V/W	7 J x 17 ⇒ page 460	38	No	
		225/45 R 17 91V/W	$7^1/_2$ J x 17 ⇒ page 463	38	No	
	Winter tyres	195/65 R 15 91Q/T	6 J x 15 ⇒ page 452	38	Yes	
		205/55 R 16 91T	$5^1/_2$ J x 16 ⇒ page 454	36	Yes	
2.0l 85 kW petrol engine	Standard tyres	195/65 R 15 91H	6 J x 15 ⇒ page 452	38	Yes	
	Modification	205/55 R 16 91H	$6^1/_2$ J x 16 ⇒ page 455	42	No	
		225/45 R 17 91V/W	7 J x 17 ⇒ page 460	38	No	
		225/45 R 17 91V/W	$7^1/_2$ J x 17 ⇒ page 463	38	No	

Protected by copyright. Copying for private or commercial purposes, in part or in whole, is not permitted unless authorised by Volkswagen AG. Volkswagen AG does not guarantee or accept any liability with respect to the correctness of information in this document. Copyright by Volkswagen AG.

satelettronica

Model engine output	Tyres	Tyre size	Wheel rim	Off-set in mm	Snow chains	Remarks
	Winter tyres	195/65 R 15 91Q/T	6 J x 15 ⇒ page 452	38	Yes	
		205/55 R 16 91T	$5^1/_2$ J x 16 ⇒ page 454	36	Yes	
1.8l 110 kW petrol engine	Standard tyres	195/65 R 15 91V	6 J x 15 ⇒ page 452	38	Yes	
	Modification	205/55 R 16 91V	$6^1/_2$ J x 16 ⇒ page 455	42	No	
		225/45 R 17 91V/W	7 J x 17 ⇒ page 460	38	No	
		225/45 R 17 91V/W	$7^1/_2$ J x 17 ⇒ page 463	38	No	
	Winter tyres	195/65 R 15 91Q/T	6 J x 15 ⇒ page 452	38	Yes	
		205/55 R 16 91T	$5^1/_2$ J x 16 ⇒ page 454	36	Yes	

Tyre pressure information is located on the tyre pressure plate on the inside of the tank flap or on the driver side B-pillar.

48.2 Wheel allocation for New Beetle Cabriolet, type 1Y model year 2003 to model year 2010

Explanation of information on wheels ⇒ page 59

Torque settings for wheel bolts ⇒ Running gear, axles, steering; Rep. gr. 44 ; Torque settings for wheel bolts

Pitch circle diameter:	100 mm
Number of wheel bolt holes:	5

48.2.1 6 J x 15

Caution

Observe the allocation of wheels and tyres to the respective engines, which are listed in the overview table ⇒ page 450 .

Protected by copyright. Copying for private or commercial purposes, in part or in whole, is not permitted unless authorised by Volkswagen AG. Volkswagen AG does not guarantee or accept any liability with respect to the correctness of information in this document. Copyright by Volkswagen AG.
satelettronica

1J0 601 025 B, 1J0 601 025 AA - Wheel and tyre combination ⇒ page 450

For vehicles with maximum permitted axle load of 1,000 kg

Size:	6 J x 15
Wheel offset in mm:	38
Wheel load in kg:	500

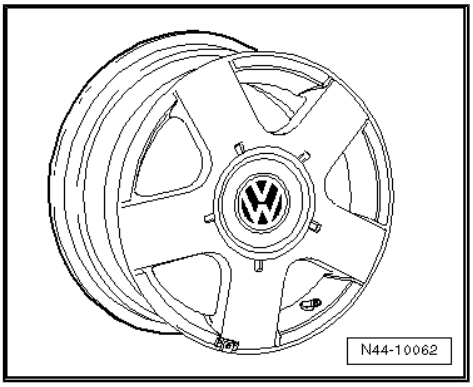

1J0 601 027 K - Wheel and tyre combination ⇒ page 450

Size:	6 J x 15
Wheel offset in mm:	38
Wheel load in kg:	550

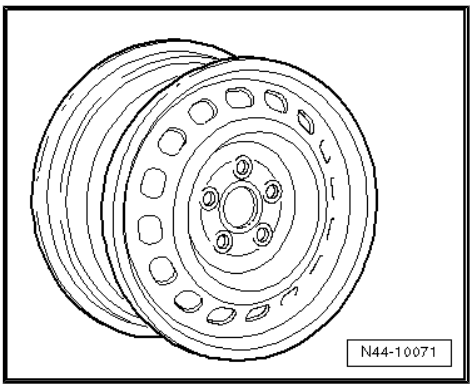

1J0 601 027 H, 1J0 601 027 Q - Wheel and tyre combination ⇒ page 450

Size:	6 J x 15
Wheel offset in mm:	38
Wheel load in kg:	550

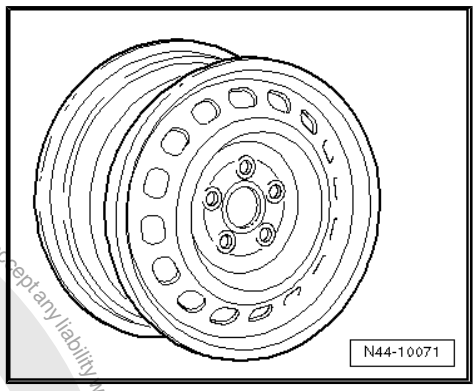

1J0 601 027 AB - Wheel and tyre combination ⇒ page 450

Size:	6 J x 15
Wheel offset in mm:	38
Wheel load in kg:	550

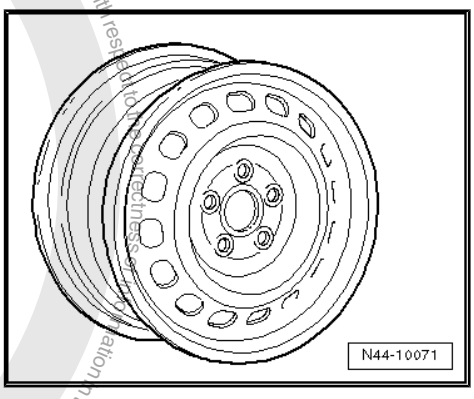

Protected by copyright. Copying for private or commercial purposes, in part or in whole is not permitted unless authorised by Volkswagen AG. Volkswagen AG does not guarantee or accept any liability with respect to the correctness of information in this document. Copyright by Volkswagen AG.
satelettronica

1J0 601 025 Q - Wheel and tyre combination ⇒ page 450

Size:	6 J x 15
Wheel offset in mm:	38
Wheel load in kg:	530

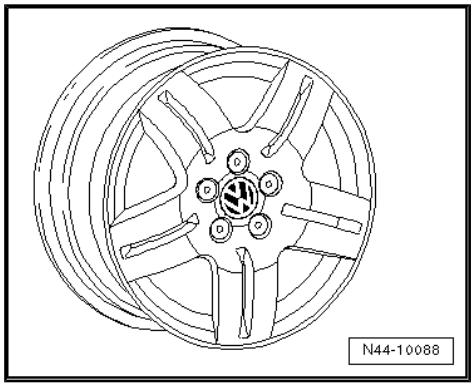

1C0 601 025 F - Wheel and tyre combination ⇒ page 450

Size:	6 J x 15
Wheel offset in mm:	38
Wheel load in kg:	550

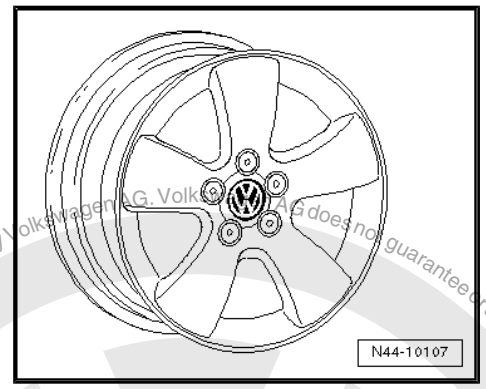

1J0 601 025 P, 1J0 601 025 AL - Wheel and tyre combination ⇒ page 450

Size:	6 J x 15
Wheel offset in mm:	38
Wheel load in kg:	550

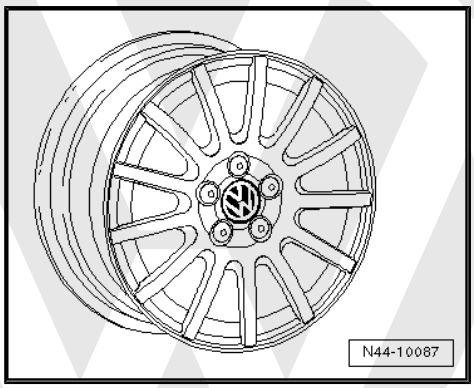

1J0 601 025 BD - Wheel and tyre combination ⇒ page 450

Size:	6 J x 15
Wheel offset in mm:	38
Wheel load in kg:	580

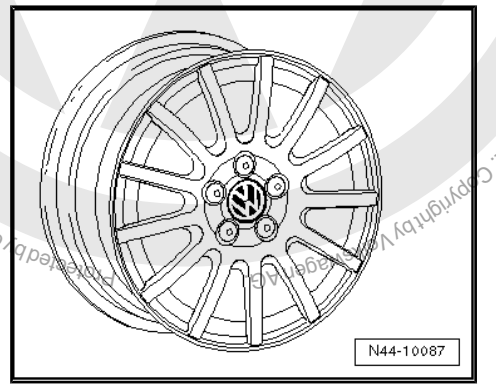

48.2.2 5 1/2 J x 16

Caution

Observe the allocation of wheels and tyres to the respective engines, which are listed in the overview table ⇒ page 450 *.*

Copyright by Volkswagen AG. Volkswagen AG does not guarantee or accept any liability with respect to the correctness of information in this document. Copyright by Volkswagen AG. Copying for private or commercial purposes, in part or in whole, is not permitted unless authorised by Volkswagen AG. Protected by copyright.
satelitronica

Winter wheels

1J0 601 025 M, 1J0 601 025 AF - Wheel and tyre combination
⇒ page 451

Size:	$5^1/_2$ J x 16
Wheel offset in mm:	36
Wheel load in kg:	550

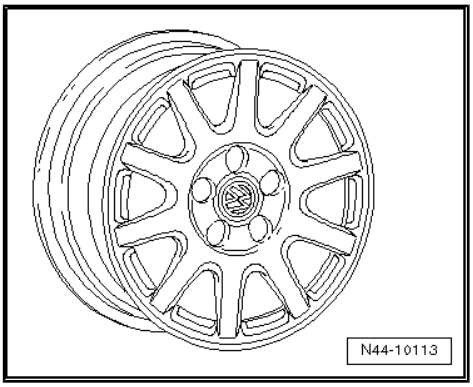

48.2.3 $6^1/_2$ J x 16

Caution

Observe the allocation of wheels and tyres to the respective engines, which are listed in the overview table *⇒ page 450* *.*

1C0 601 025 A, 1C0 601 025 D - Wheel and tyre combination
⇒ page 451

For vehicles with maximum permitted axle load of 1,000 kg

Size:	$6^1/_2$ J x 16
Wheel offset in mm:	42
Wheel load in kg:	500

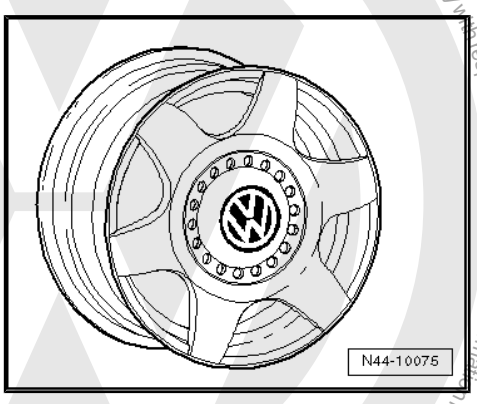

1C0 601 025 AH - Wheel and tyre combination ⇒ page 451

Size:	$6^1/_2$ J x 16
Wheel offset in mm:	42
Wheel load in kg:	550

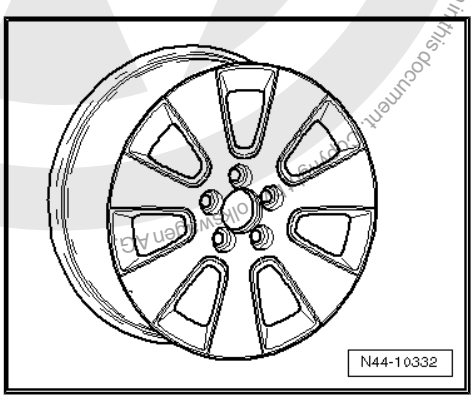

Protected by copyright. Copying for private or commercial purposes, in part or in whole, is not permitted unless authorised by Volkswagen AG. Volkswagen AG does not guarantee or accept any liability with respect to the correctness of information in this document. Copyright by Volkswagen AG.
satelettronica

1J0 601 027 L, 1J0 601 027 R - Wheel and tyre combination

⇒ page 451

Size:	$6^1/_2$ J x 16
Wheel offset in mm:	42
Wheel load in kg:	550

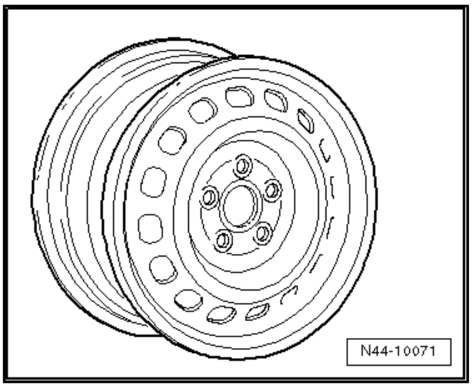

1J0 601 027 T, 1J0 601 027 AF - Wheel and tyre combination

⇒ page 451

Size:	$6^1/_2$ J x 16
Wheel offset in mm:	42
Wheel load in kg:	550

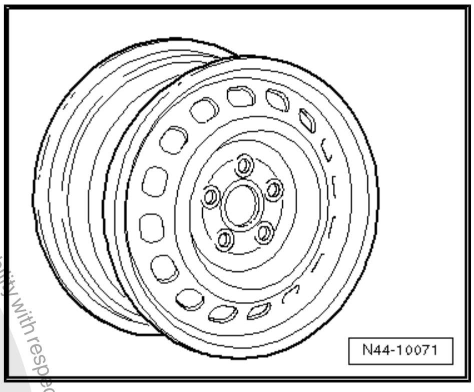

1J0 601 025 F, 1J0 601 025 AC - Wheel and tyre combination

⇒ page 451

Size:	$6^1/_2$ J x 16
Wheel offset in mm:	42
Wheel load in kg:	530

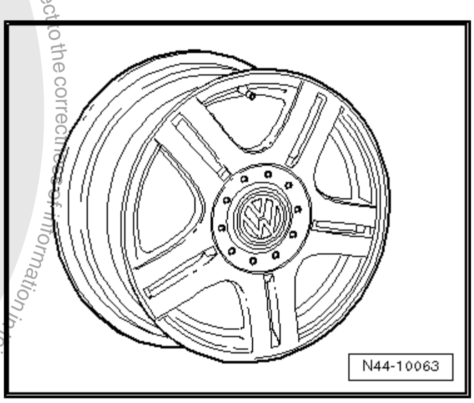

1J0 601 025 E, 1J0 601 025 AD - Wheel and tyre combination

⇒ page 451

Size:	$6^1/_2$ J x 16
Wheel offset in mm:	42
Wheel load in kg:	530

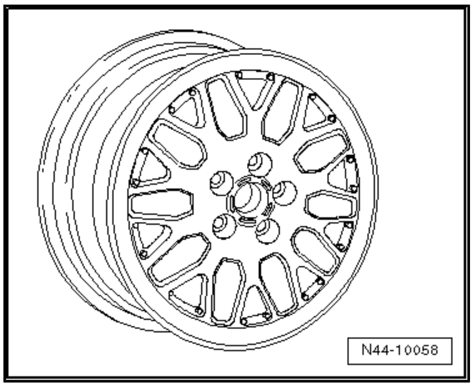

Protected by copyright. Copying for private or commercial purposes, in part or in whole, is not permitted unless authorised by Volkswagen AG. Volkswagen AG does not guarantee or accept any liability with respect to the correctness of information in this document. Copyright by Volkswagen AG.

sateletronica

1J0 601 025 H, 1J0 601 025 AH - Wheel and tyre combination
⇒ page 451

Size:	$6^1/_2$ J x 16
Wheel offset in mm:	42
Wheel load in kg:	530

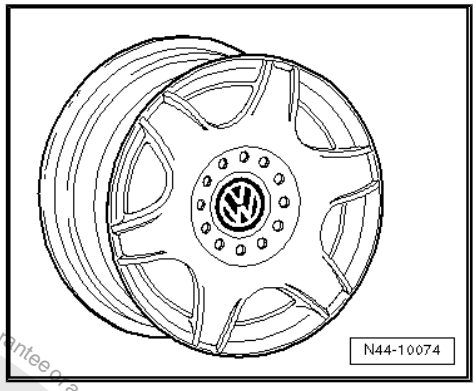

1J0 601 025 L, 1J0 601 025 AE - Wheel and tyre combination
⇒ page 451

Size:	$6^1/_2$ J x 16
Wheel offset in mm:	42
Wheel load in kg:	550

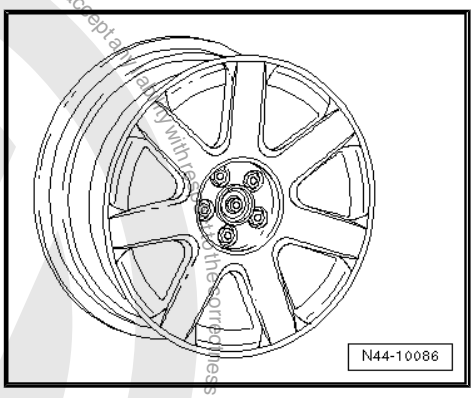

1J0 601 025 R, 1J0 601 025 AN - Wheel and tyre combination
⇒ page 451

Size:	$6^1/_2$ J x 16
Wheel offset in mm:	42
Wheel load in kg:	550

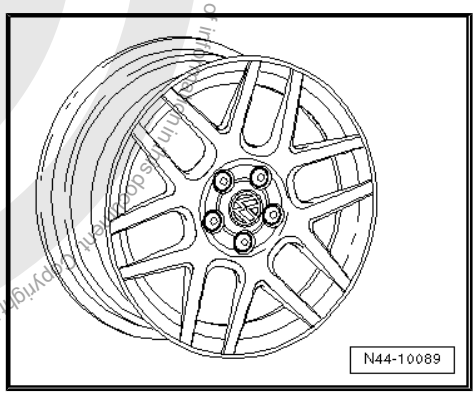

1J0 601 025 T, 1J0 601 025 AJ - Wheel and tyre combination
⇒ page 451

Size:	$6^1/_2$ J x 16
Wheel offset in mm:	42
Wheel load in kg:	550

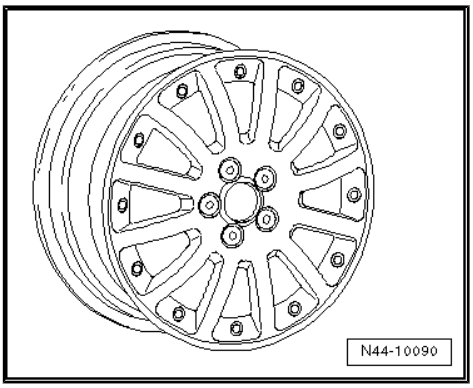

Protected by copyright. Copying for private or commercial purposes, in part or in whole, is not permitted unless authorised by Volkswagen AG. Volkswagen AG does not guarantee or accept any liability with respect to the correctness of information in this document. Copyright by Volkswagen AG.
satelettronica

1C0 601 025 G, 1C0 601 025 AA - Wheel and tyre combination
⇒ page 451

Size:	$6^1/_2$ J x 16
Wheel offset in mm:	42
Wheel load in kg:	550

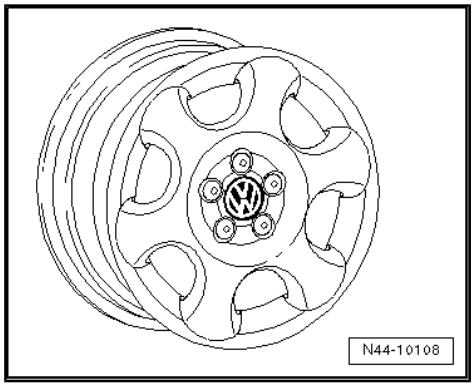

1C0 601 025 H - Wheel and tyre combination ⇒ page 451

Size:	$6^1/_2$ J x 16
Wheel offset in mm:	42
Wheel load in kg:	550

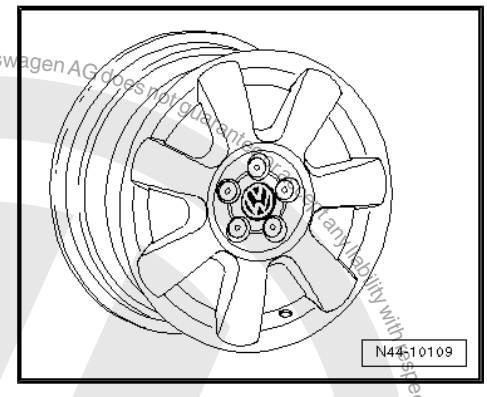

1C0 601 025 N - Wheel and tyre combination ⇒ page 451

Size:	$6^1/_2$ J x 16
Wheel offset in mm:	42
Wheel load in kg:	550

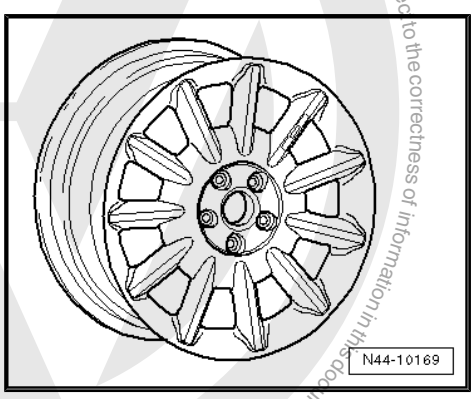

1C0 601 025 P - Wheel and tyre combination ⇒ page 451

Size:	$6^1/_2$ J x 16
Wheel offset in mm:	42
Wheel load in kg:	550

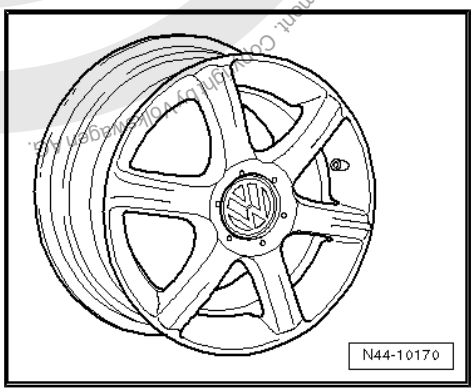

Protected by copyright. Copyright for private or commercial purposes, in part or in whole, is not permitted unless authorised by Volkswagen AG. Volkswagen AG does not guarantee or assume any liability with respect to the correctness of information in this document. Copyright by Volkswagen AG.
satelettronica

1C0 601 025 T - Wheel and tyre combination ⇒ page 451

Size:	$6^1/_2$ J x 16
Wheel offset in mm:	42
Wheel load in kg:	550

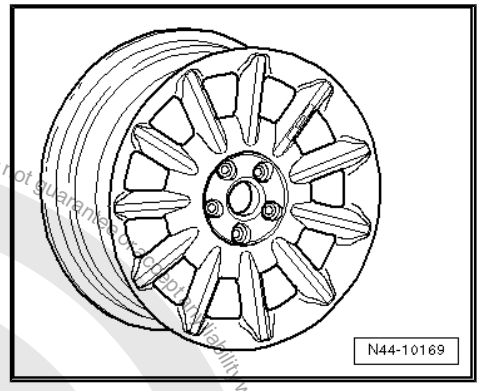

1C0 601 025 AB - Wheel and tyre combination ⇒ page 451

Size:	$6^1/_2$ J x 16
Wheel offset in mm:	42
Wheel load in kg:	550

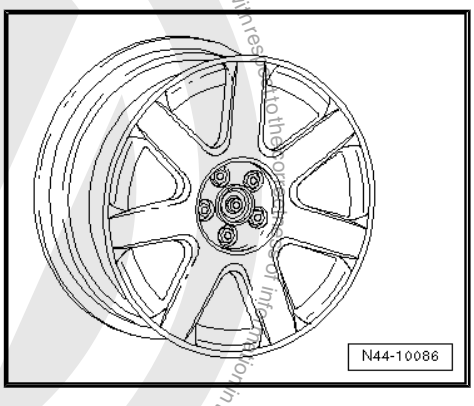

1C0 601 025 AC, 1C0 601 025 AF - Wheel and tyre combination ⇒ page 451

Size:	$6^1/_2$ J x 16
Wheel offset in mm:	42
Wheel load in kg:	550

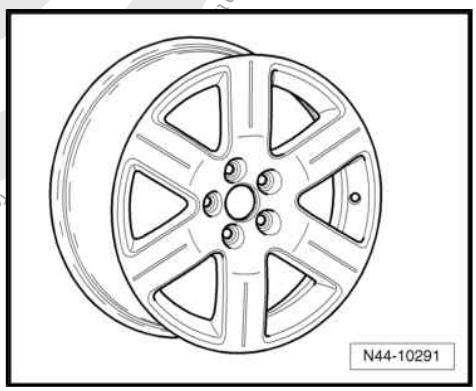

1C0 601 025 AJ - Wheel and tyre combination ⇒ page 451

Size:	$6^1/_2$ J x 16
Wheel offset in mm:	42
Wheel load in kg:	550

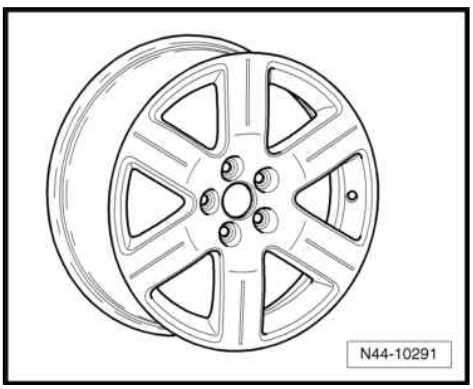

Protected by copyright. Copying for private or commercial purposes, in part or in whole, is not permitted unless authorised by Volkswagen AG. Volkswagen AG does not guarantee or accept any liability with respect to the correctness of information.
satelettronica

Copyright by Volkswagen AG. Volkswagen AG does not guarantee or accept any liability with respect to the correctness of information in this document. Copyright by Volkswagen AG. Protected by copyright. Copying for private or commercial purposes, in part or in whole, is not permitted unless authorised by Volkswagen AG.

48.2.4 7 J x 17

The following wheels are permitted only if the stated conditions ⇒ page 463 are fulfilled.

> ⚠ **Caution**
>
> *Observe the allocation of wheels and tyres to the respective engines, which are listed in the overview table ⇒ page 450 .*

1J0 601 025 J, 1J0 601 025 S - Wheel and tyre combination ⇒ page 451

Size:	7 J x 17
Wheel offset in mm:	38
Wheel load in kg:	580

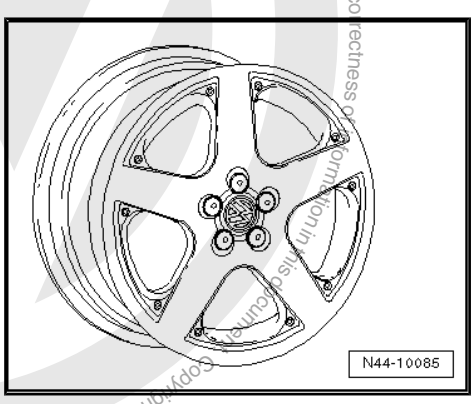

1J0 601 025 AB - Wheel and tyre combination ⇒ page 451

Size:	7 J x 17
Wheel offset in mm:	38
Wheel load in kg:	550

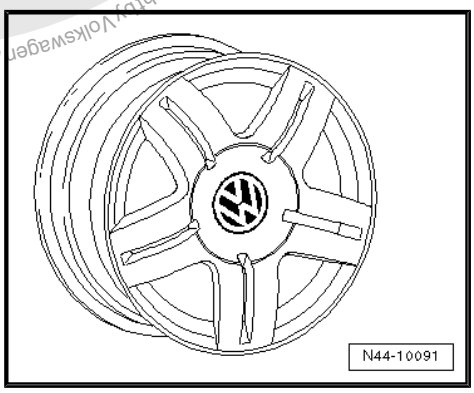

1C0 601 025 AE - Wheel and tyre combination ⇒ page 451

Size:	7 J x 17
Wheel offset in mm:	38
Wheel load in kg:	550

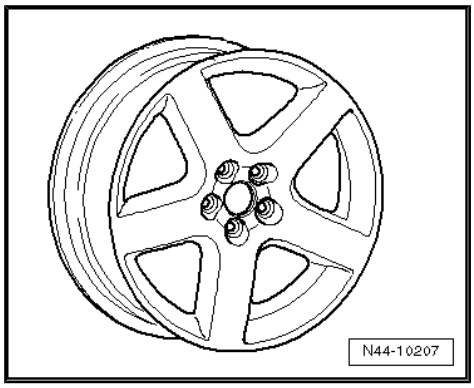

satelettronica

1C0 601 025 AG - Wheel and tyre combination ⇒ page 451

Size:	7 J x 17
Wheel offset in mm:	38
Wheel load in kg:	550

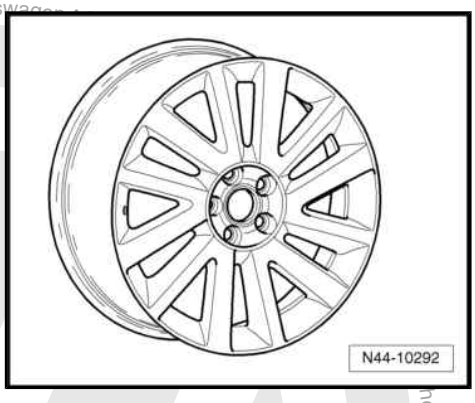

1C0 601 025 B, 1C0 601 025 E - Wheel and tyre combination ⇒ page 451

Size:	7 J x 17
Wheel offset in mm:	38
Wheel load in kg:	550

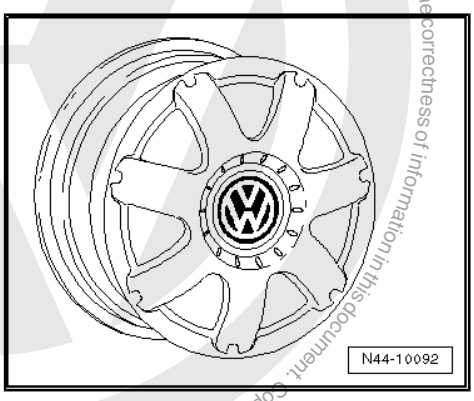

1C0 601 025 J - Wheel and tyre combination ⇒ page 451

Size:	7 J x 17
Wheel offset in mm:	38
Wheel load in kg:	550

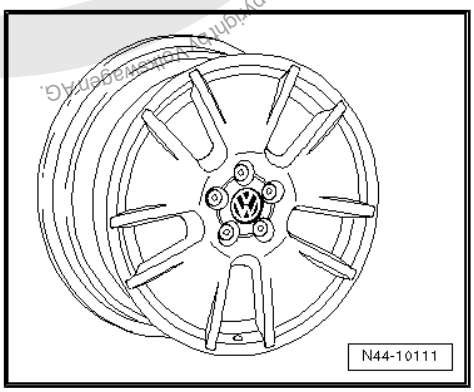

1C0 601 025 K, 1C0 601 025 Q - Wheel and tyre combination ⇒ page 451

Alloy disc-type wheels with exchangeable trim elements ⇒ page 451

Size:	7 J x 17
Wheel offset in mm:	38
Wheel load in kg:	550

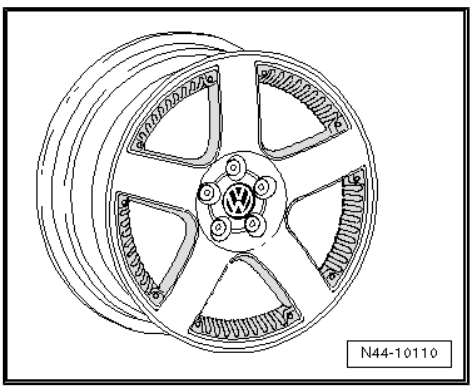

Protected by copyright. Copying for private or commercial purposes, in part or in whole, is not permitted unless authorised by Volkswagen AG. Volkswagen AG does not guarantee the correctness of information in this document.
satelettronica

1J0 601 025 AS - Wheel and tyre combination ⇒ page 451

Size:	7 J x 17
Wheel offset in mm:	38
Wheel load in kg:	550

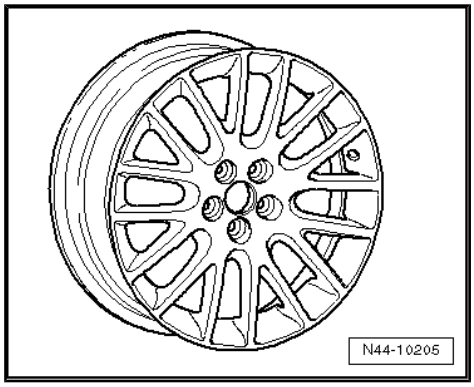

1C0 601 025 M - Wheel and tyre combination ⇒ page 451

Size:	7 J x 17
Wheel offset in mm:	38
Wheel load in kg:	550

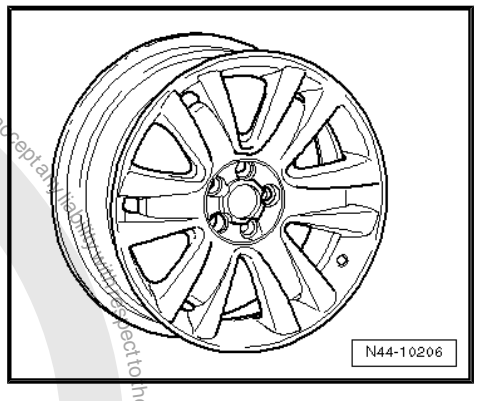

1C0 601 025 R - Wheel and tyre combination ⇒ page 451

Size:	7 J x 17
Wheel offset in mm:	38
Wheel load in kg:	550

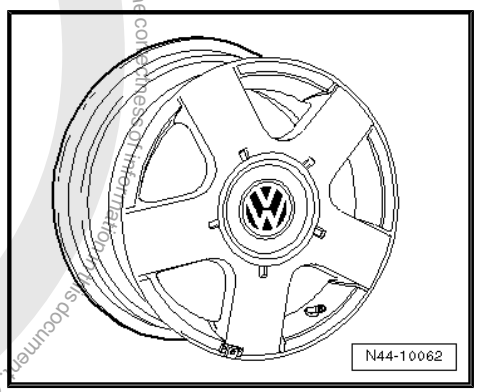

1J0 601 025 BE - Wheel and tyre combination ⇒ page 451

Size:	7 J x 17
Wheel offset in mm:	38
Wheel load in kg:	550

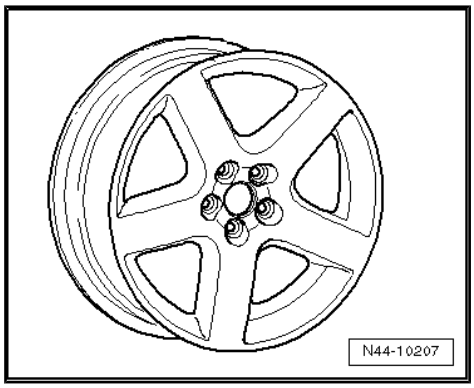

Protected by copyright. Copying for private or commercial purposes, in part or in whole, is not permitted unless authorised by Volkswagen AG. Volkswagen AG does not guarantee or accept any liability with respect to the correctness of information in this document. Copyright by Volkswagen AG.

satelettronica

48.2.5 7 1/2 J x 17

The following wheels are permitted only if the stated conditions ⇒ page 463 are fulfilled.

> ⚠ **Caution**
>
> *Observe the allocation of wheels and tyres to the respective engines, which are listed in the overview table ⇒ page 450 .*

1J0 601 025 BF - Wheel and tyre combination ⇒ page 451

Size:	7 1/2 J x 17
Wheel offset in mm:	38
Wheel load in kg:	550

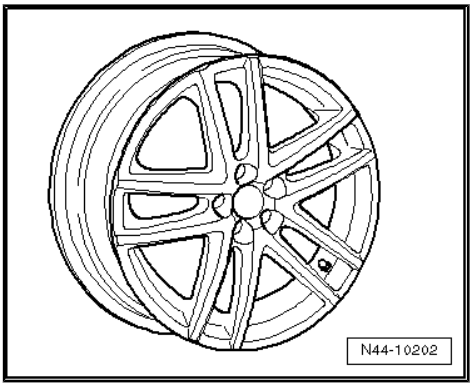

1J0 601 025 BH - Wheel and tyre combination ⇒ page 451

Size:	7 1/2 J x 17
Wheel offset in mm:	38
Wheel load in kg:	560

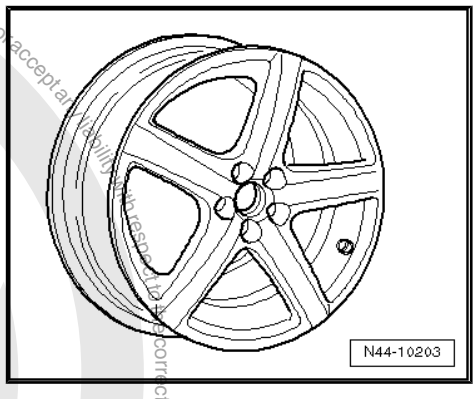

48.3 Conditions for fitting 17" wheels and tyres

17" wheels with 225/45 R 17 tyres are possible only:

1. For vehicles from model year 2003.

2. If 17" sports running gear and a steering box with reduced steering arm travel is installed in the vehicle

Allocation of steering box PR No. to engine:	
PR No. of steering box	**Engine**
QZ 3[15)]	1.8l; 2.0l petrol engines; 1.9l diesel engines
QZ 4[15)]	Up to and including 1.6l petrol engines

15) Replacement part numbers ⇒ Electronic parts catalogue “ETKA”

3. If tyres with a maximum width of 218 mm are used.

Protected by copyright. Copying for private or commercial purposes, in part or in whole, is not permitted unless authorised by Volkswagen AG. Volkswagen AG does not guarantee or accept any liability with respect to the correctness of information in this document. Copyright by Volkswagen AG.
satelettronica

4. If snow chains are not used.

Maximum width of 17" tyres

If a vehicle is retrofitted with 17" tyres or if existing 17" tyres are renewed, use only tyres with a maximum width -a- which does not exceed 218 mm during use [16].

16) The measured width of the tyre including lettering on 7 J x 17 or $7^1/_2$ J x 17 and at the specified tyre pressure.

If wider tyres are used, under certain circumstances, the tyres may contact the front axle and the bodywork while the car is being driven.

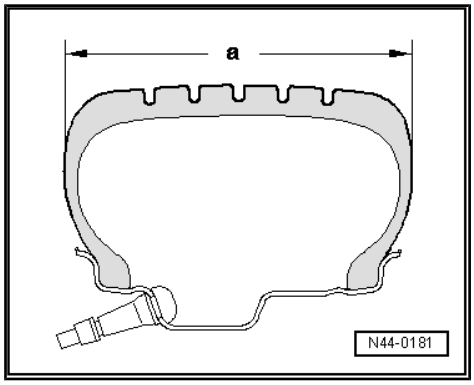

Protected by copyright. Copying for private or commercial purposes, in part or in whole, is not permitted unless authorised by Volkswagen AG. Volkswagen AG does not guarantee or accept any liability with respect to the correctness of information in this document. Copyright by Volkswagen AG.
satelettronica

49 New Beetle RSi

General

Volkswagen vehicles are built according to the latest findings in safety engineering. To keep it that way, we recommend the use of only genuine Volkswagen spare parts. You can recognise this by the VW Audi logo and by the part number. It has been established that these parts are reliable, safe and suitable.

Despite constant appraisal of the market, we cannot assess other products on these points, even when in isolated cases they have been passed by official inspectors or have been granted official approval. Therefore, we cannot, of course, assume any liability if these products are installed.

> **WARNING**
>
> *The products from Volkswagen genuine parts and Votex genuine accessories may differ in fitting requirements, torque specifications and so on.*
>
> *Always follow the respective fitting and operating instructions.*

The wheel and tyre combinations or changes listed in the vehicle tables refer exclusively to Volkswagen Genuine wheels. Approval of wheel and tyre combinations or a change to wheels from the accessories trade is not possible with the parts certificate attached here.

> **WARNING**
>
> *The fitting instructions and torque specifications for wheels from Votex genuine accessories may differ from those intended for wheels from Volkswagen genuine parts.*
>
> *Therefore, always observe the torque settings for the wheel bolts as well as the respective fitting and operating instructions.*

Protected by copyright. Copying for private or commercial purposes, in part or in whole, is not permitted unless authorised by Volkswagen AG. Volkswagen AG does not guarantee or accept any liability with respect to the correctness of information in this document. Copyright by Volkswagen AG.

satelettronica

49.1 New Beetle RSi, type 9CR from model year 2001

Appendix 2 to Parts Certificate 1486/03

Type Approval No.: e1*98/14*0152*00

Overview

Model engine output	Tyres	Tyre size	Wheel rim	Off-set in mm	Snow chains	Remarks
3.2l 165 kW	Standard tyres	235/40 R 18 91W	9 J x 18 ⇒ page 466	10	No	General information on: ◆ Winter tyres ⇒ page 15 ◆ Snow chains ⇒ page 18
	Modification	No changes are permissible apart from the standard wheel and tyre combinations!				Tyre makes recommended by Volkswagen:

Model engine output	Tyres	Tyre size	Wheel rim	Off-set in mm	Snow chains	Remarks
	Winter tyres	205/55 R 16 91H	7 J x 16 ⇒ page 466	10	Yes	◆ Summer tyres ⇒ page 658 ◆ Winter tyres ⇒ page 690

49.2 Wheel allocation for New Beetle RSi, type 9CR from model year 2001

Explanation of information on wheels ⇒ page 59

Torque specification for wheel bolts ⇒ Running gear, axles, steering; Rep. gr. 44 ; Wheels and tyres; Fitting notes on removing and installing wheels

Pitch circle diameter:	100 mm
Number of wheel bolt holes:	5

49.2.1 7 J x 16

Caution

Observe the allocation of wheels and tyres to the respective engines, which are listed in the overview table ⇒ page 465 .

Winter wheel

1C9 601 025 A - Wheel and tyre combination ⇒ page 466

Size:	7 J x 16
Wheel offset in mm:	10
Wheel load in kg:	520

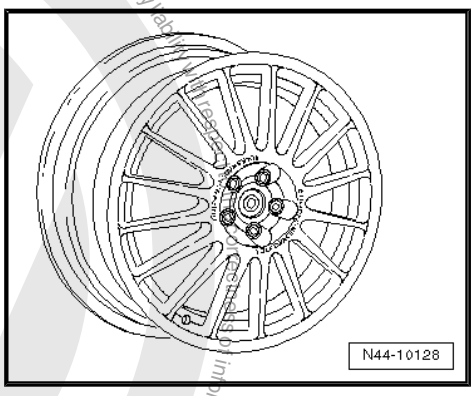

49.2.2 9 x 18

Caution

Observe the allocation of wheels and tyres to the respective engines, which are listed in the overview table ⇒ page 465 .

Protected by copyright. Copyright by Volkswagen AG.
Volkswagen AG. Volkswagen AG does not guarantee or accept any liability with respect to the correctness of information in this document. Copyright by Volkswagen AG.
Distribution to third parties, translation into other languages and all forms of commercial purposes, in part or in whole, is not permitted unless authorised by Volkswagen AG. Volkswagen AG does not guarantee or accept any liability with respect to the correctness of information in this document. Copyright by Volkswagen AG.
satelettronica

1C9 601 025 - Wheel and tyre combination ⇒ page 465

Size:	9 x 18
Wheel offset in mm:	10
Wheel load in kg:	520

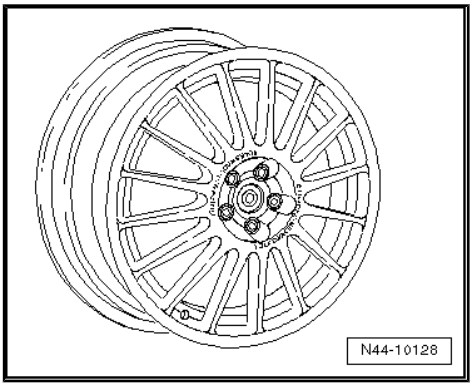

Protected by copyright. Copying for private or commercial purposes, in part or in whole, is not permitted unless authorised by Volkswagen AG. Volkswagen AG does not guarantee or accept any liability with respect to the correctness of information in this document. Copyright by Volkswagen AG.

satelettronica

50 Passat model year 1994 to model year 1997

General

Volkswagen vehicles are built according to the latest findings in safety engineering. To keep it that way, we recommend the use of only genuine Volkswagen spare parts. You can recognise this by the VW Audi logo and by the part number. It has been established that these parts are reliable, safe and suitable.

Despite constant appraisal of the market, we cannot assess other products on these points, even when in isolated cases they have been passed by official inspectors or have been granted official approval. Therefore, we cannot, of course, assume any liability if these products are installed.

> ⚠ **WARNING**
>
> *The products from Volkswagen genuine parts and Votex genuine accessories may differ in fitting requirements, torque specifications and so on.*
>
> *Always follow the respective fitting and operating instructions.*

The wheel and tyre combinations or changes listed in the vehicle tables refer exclusively to Volkswagen Genuine wheels. Approval of wheel and tyre combinations or a change to wheels from the accessories trade is not possible with the parts certificate attached here.

> ⚠ **WARNING**
>
> *The fitting instructions and torque specifications for wheels from Votex genuine accessories may differ from those intended for wheels from Volkswagen genuine parts.*
>
> *Therefore, always observe the torque settings for the wheel bolts as well as the respective fitting and operating instructions.*

50.1 Passat, type 35I model year 1994 to model year 1997

Appendix 2 to Parts Certificate 1481/00

General type approval No. for Passat front-wheel drive; E 657/1 Supplement 5

General type approval No. for Passat Syncro; E 960 Supplement 8

Overview

Model engine output	Tyres	Tyre size	Wheel rim	Off-set in mm	Snow chains	Remarks
55 kW petrol and diesel engines	Standard tyres	185/65 R 14 86T	6 J x 14 ⇒ page 470	38	Yes	205/50 R 15 86 tyres are standard on vehicles having GT equipment

Protected by copyright. Copying for private or commercial purposes, in part or in whole, is not permitted unless authorised by Volkswagen AG. Volkswagen AG does not guarantee or accept any liability with respect to the correctness of information in this document. Copyright by Volkswagen AG.
satelettronica

Model engine output	Tyres	Tyre size	Wheel rim	Off-set in mm	Snow chains	Remarks
	Modification	185/65 R 14 86S	6 J x 14 ⇒ page 470	38	Yes	General information on: ◆ Winter tyres ⇒ page 15 ◆ Snow chains ⇒ page 18
		195/60 R 14 86S	6 J x 14 ⇒ page 470	38	Yes	Tyre makes recommended by Volkswagen: ◆ Summer tyres ⇒ page 659 ◆ Winter tyres ⇒ page 690
		205/50 R 15 86S	6 J x 15 ⇒ page 472	35	Yes	
	Winter tyres	185/65 R 14 85Q	6 J x 14 ⇒ page 470	38	Yes	
66 kW petrol and diesel engines; Saloon/Variant; 66 kW TDI Syncro	Standard tyres	185/65 R 14 86T	6 J x 14 ⇒ page 470	38	Yes	
	Modification	195/60 R 14 86T	6 J x 14 ⇒ page 470	38	Yes	
		205/50 R 15 86T	6 J x 15 ⇒ page 472	35	Yes	
	Winter tyres	185/65 R 14 85Q	6 J x 14 ⇒ page 470	38	Yes	
74 kW, 85 kW Saloon/Variant; 85 kW Syncro	Standard tyres	195/60 R 14 86H	6 J x 14 ⇒ page 470	38	Yes	
	Modification	185/65 R 14 85H	6 J x 14 ⇒ page 470	38	Yes	
		205/50 R 15 86H* ⇒ page 469	6 J x 15 ⇒ page 470	35	Yes	*Not for vehicles with heavy-duty running gear (1BB)
	Winter tyres	185/65 R 14 85Q	6 J x 14 ⇒ page 470	38	Yes	Syncro vehicles: Snow chains are permitted on the front wheels only.
81 kW TDI 81 kW Syncro Saloon/Variant;	Standard tyres	205/50 R 15 86H	6 J x 15 ⇒ page 474	35	Yes	
	Modification	No changes are permissible apart from the standard wheel and tyre combinations!				
	Winter tyres	195/55 R 15 85T	6 J x 15 ⇒ page 472	35	Yes	Vehicles with front-wheel drive
		205/50 R 15 86T	6 J x 15 ⇒ page 472	35	Yes	Syncro vehicles
110 kW Saloon/Variant	Standard tyres	205/50 R 15 86W	6 J x 15 ⇒ page 474	35	Yes	

Protected by copyright. Copying for private or commercial purposes, in part or in whole, is not permitted unless authorised by Volkswagen AG. Volkswagen AG does not guarantee or accept any liability with respect to the correctness of information in this document. Copyright by Volkswagen AG.

satelettronica

Model engine output	Tyres	Tyre size	Wheel rim	Off-set in mm	Snow chains	Remarks
	Modification	205/50 R 15 86V	6 J x 15 ⇒ page 474	35	Yes	
	Winter tyres	195/55 R 15 85T	6 J x 15 ⇒ page 474	35	Yes	
128 kW VR6 Saloon/Variant	Standard tyres	205/50 R 15 86W	6 J x 15 ⇒ page 474	35	Yes	
	Modification	205/50 ZR 15 86W** ⇒ page 470	6 J x 15 ⇒ page 474	35	Yes	**Tyres with this double rating were offered by tyre dealers only during a transition period after which W tyres were offered.
	Winter tyres	195/55 R 15 85T	6 J x 15 ⇒ page 474	35	Yes	
135 kW Syncro Variant	Standard tyres	205/50 R 15 86W	6 J x 15 ⇒ page 474	35	Yes	Syncro vehicles: Snow chains are permitted on the front wheels only.
	Modification	205/50 ZR 15 86W** ⇒ page 470	6 J x 15 ⇒ page 474	35	Yes	
	Winter tyres	205/50 R 15 86T	6 J x 15 ⇒ page 474	35	Yes	

Tyre pressures can be found on the inside of the fuel tank flap or in ⇒ Maintenance ; Booklet 27

50.2 Wheel allocation for Passat, type 35I model year 1994 to model year 1997

Explanation of information on wheels ⇒ page 59

Torque specifications for wheel bolts ⇒ Running gear, axles, steering; Rep. gr. 40 ; Repairing front suspension (basic running gear); Removing and installing wheel bearing, strut, drive shaft (basic suspension) or ⇒ Running gear, axles, steering; Rep. gr. 40 ; Repairing front suspension (plus running gear); Removing and installing wheel bearing, strut (plus running gear)

Pitch circle diameter: 100 mm

50.2.1 6 J x 14

Caution

Observe the allocation of wheels and tyres to the respective engines, which are listed in the overview table ⇒ page 468 .

Protected by copyright. Copying for private or commercial purposes, in part or in whole, is not permitted unless authorised by Volkswagen AG. Volkswagen AG does not guarantee or accept any liability with respect to the correctness of information in this document. Copyright by Volkswagen AG.
satelettronica

Saloon/Variant 55 to 85 kW petrol engine front-wheel drive,

Variant Syncro 85 kW,

55 to 66 kW diesel engines, front-wheel drive

357 601 025 A/B/Q - Wheel and tyre combination ⇒ page 468

Size:	6 J x 14
Wheel offset in mm:	38
Wheel load in kg:	530
Number of wheel bolt holes:	4

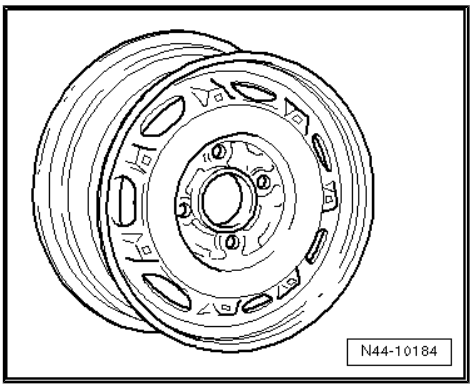

357 601 025 AB/AC - Wheel and tyre combination ⇒ page 468

Size:	6 J x 14
Wheel offset in mm:	38
Wheel load in kg:	530
Number of wheel bolt holes:	4

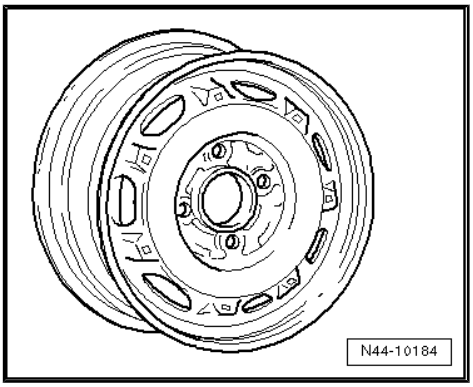

357 601 025 C - Wheel and tyre combination ⇒ page 468

Size:	6 J x 14
Wheel offset in mm:	38
Wheel load in kg:	515
Number of wheel bolt holes:	4

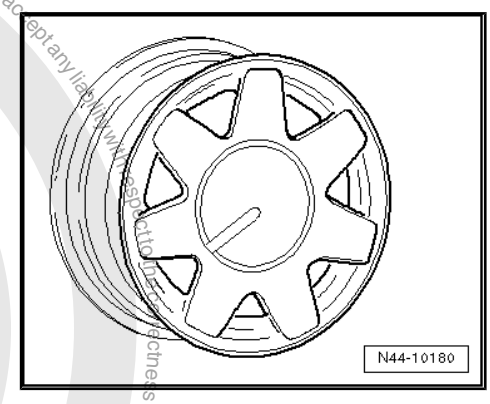

171 601 025 H - Wheel and tyre combination ⇒ page 468

Note

Not for Variant Syncro 85 kW!

Size:	6 J x 14
Wheel offset in mm:	38
Wheel load in kg:	515
Number of wheel bolt holes:	4

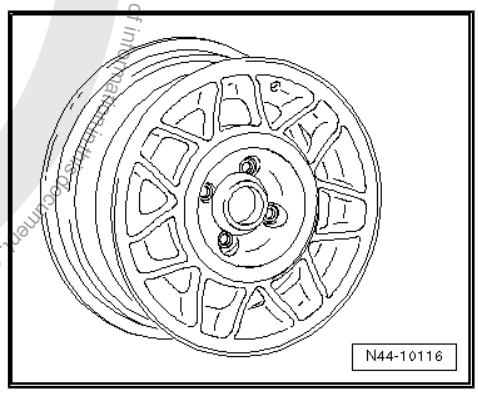

Protected by copyright. Copying for private or commercial purposes, in part or in whole, is not permitted unless authorised by Volkswagen AG. Volkswagen AG does not guarantee or accept any liability with respect to the correctness of information in this document. Copyright by Volkswagen AG.
satelettronica

191 601 025 F - Wheel and tyre combination ⇒ page 468

Size:	6 J x 14
Wheel offset in mm:	38
Wheel load in kg:	510
Number of wheel bolt holes:	4

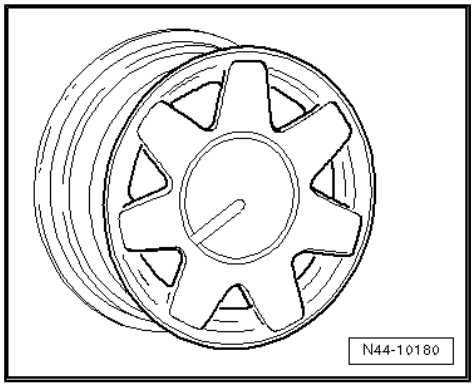

321 601 025 N - Wheel and tyre combination ⇒ page 468

Note

Not for Variant Syncro 85 kW!

Size:	6 J x 14
Wheel offset in mm:	38
Wheel load in kg:	500
Number of wheel bolt holes:	4

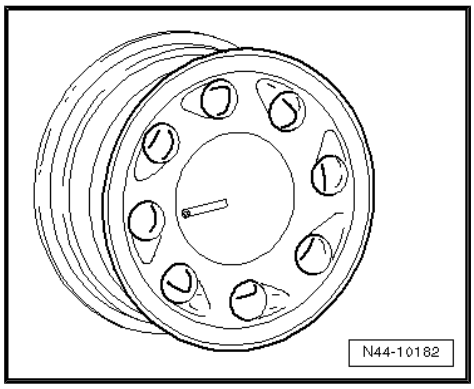

357 601 025 N - Wheel and tyre combination ⇒ page 468

Size:	6 J x 14
Wheel offset in mm:	38
Wheel load in kg:	510
Number of wheel bolt holes:	4

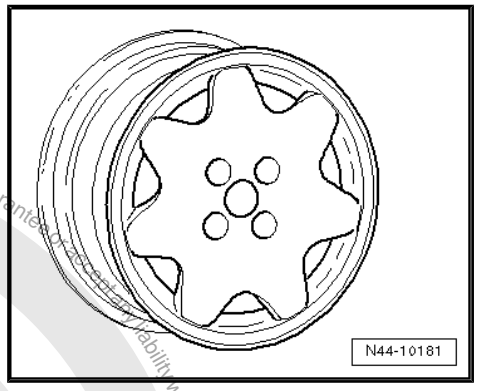

50.2.2 6 J x 15

Caution

Observe the allocation of wheels and tyres to the respective engines, which are listed in the overview table ⇒ page 468 *.*

Protected by copyright. Copyright for private or commercial purposes, part from which is not permitted unless authorised by Volkswagen AG. Volkswagen AG does not guarantee accuracy/reliability with respect to the correctness of information in this document. Copyright by Volkswagen AG.

satelettronica

Saloon/Variant 55 to 85 kW petrol engine front-wheel drive,

Variant Syncro 85 kW,

55 to 66 kW diesel engines, front-wheel drive

535 601 025 B/F - Wheel and tyre combination ⇒ page 469

Size:	6 J x 15
Wheel offset in mm:	35
Wheel load in kg:	510
Number of wheel bolt holes:	4

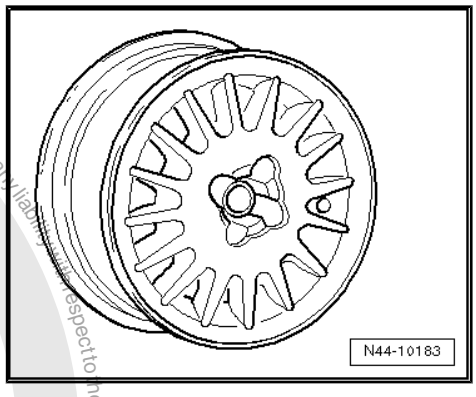

3A0 601 025 B - Wheel and tyre combination ⇒ page 469

Size:	6 J x 15
Wheel offset in mm:	35
Wheel load in kg:	530
Number of wheel bolt holes:	4

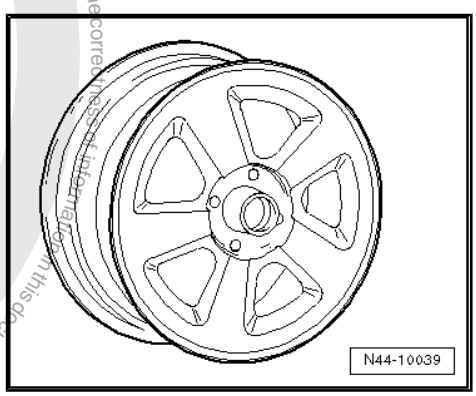

357 601 025 G - Wheel and tyre combination ⇒ page 469

Size:	6 J x 15
Wheel offset in mm:	35
Wheel load in kg:	510
Number of wheel bolt holes:	4

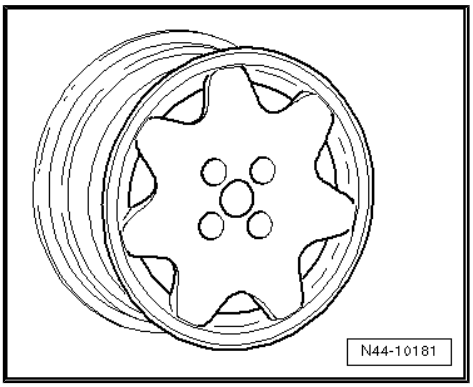

191 601 025 Q/AD - Wheel and tyre combination ⇒ page 469

Size:	6 J x 15
Wheel offset in mm:	35
Wheel load in kg:	510
Number of wheel bolt holes:	4

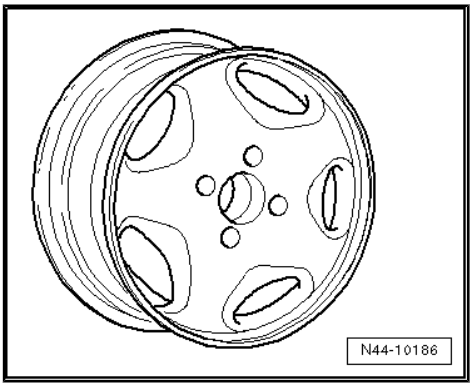

Protected by copyright. Copying for private or commercial purposes, in part or in whole, is not permitted unless authorised by Volkswagen AG. Volkswagen AG does not guarantee or accept any liability with respect to the correctness of information in this document. Copyright by Volkswagen AG.
satelettronica

357 601 025 M - Wheel and tyre combination ⇒ page 469

Size:	6 J x 15
Wheel offset in mm:	35
Wheel load in kg:	530
Number of wheel bolt holes:	4

Saloon/Variant 16V and VR6 as well as 81 kW TDI Syncro, 135 kW VR6 Syncro

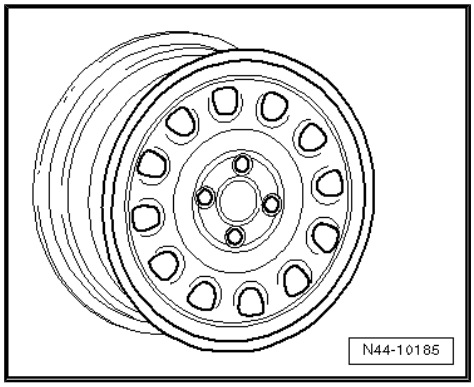

357 601 025 AA - Wheel and tyre combination ⇒ page 469

Size:	6 J x 15
Wheel offset in mm:	35
Wheel load in kg:	510
Number of wheel bolt holes:	5

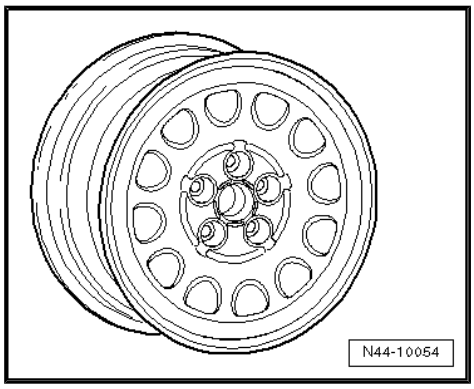

3A0 601 027 - Wheel and tyre combination ⇒ page 469

Size:	6 J x 15
Wheel offset in mm:	35
Wheel load in kg:	530
Number of wheel bolt holes:	5

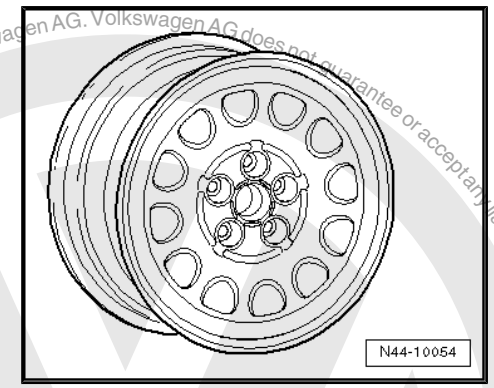

357 601 025 S - Wheel and tyre combination ⇒ page 469

Size:	6 J x 15
Wheel offset in mm:	35
Wheel load in kg:	530
Number of wheel bolt holes:	5

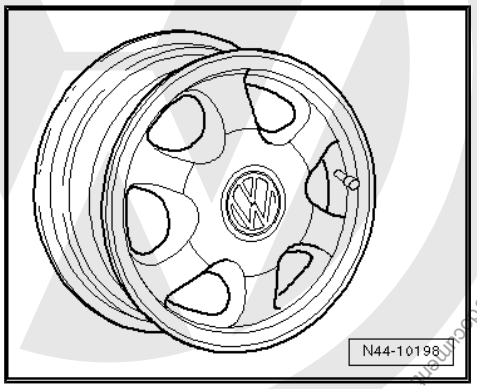

Protected by copyright. Copying for private or commercial purposes, in part or in whole, is not permitted unless authorised by Volkswagen AG. Volkswagen AG does not guarantee or accept any liability with respect to the correctness of information in this document. Copyright by Volkswagen AG.
satelettronica

357 601 025 T - Wheel and tyre combination ⇒ page 469

Size:	6 J x 15
Wheel offset in mm:	35
Wheel load in kg:	530
Number of wheel bolt holes:	5

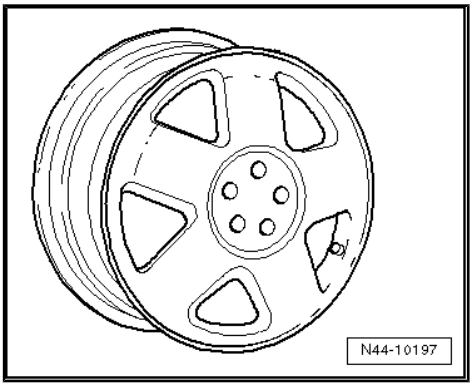

3A0 601 025 A - Wheel and tyre combination ⇒ page 469

Size:	6 J x 15
Wheel offset in mm:	35
Wheel load in kg:	530
Number of wheel bolt holes:	5

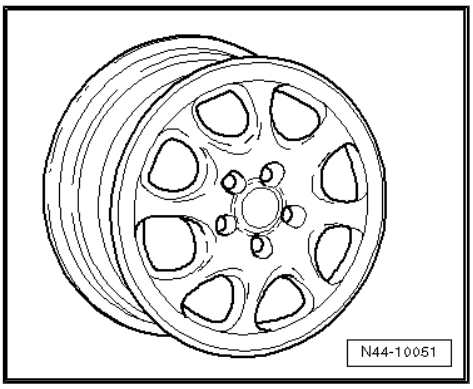

Protected by copyright. Copyright by Volkswagen AG.
Copyright by Volkswagen AG. Volkswagen AG does not guarantee or accept any liability with respect to the correctness of information in this document.
Copying for private or commercial purposes, in part or in whole, is not permitted unless authorised by Volkswagen AG.
satelettronica

© Volkswagen AG, Wolfsburg. It is not permitted to use or distribute this document without authorisation by Volkswagen AG. Volkswagen does not guarantee or accept any liability with respect to the correctness of information in this document. Copyright by Volkswagen AG.

51 Passat model year 1997 to model year 2005

General

Volkswagen vehicles are built according to the latest findings in safety engineering. To keep it that way, we recommend the use of only genuine Volkswagen spare parts. You can recognise this by the VW Audi logo and by the part number. It has been established that these parts are reliable, safe and suitable.

Despite constant appraisal of the market, we cannot assess other products on these points, even when in isolated cases they have been passed by official inspectors or have been granted official approval. Therefore, we cannot, of course, assume any liability if these products are installed.

> ⚠ **WARNING**
>
> *The products from Volkswagen genuine parts and Votex genuine accessories may differ in fitting requirements, torque specifications and so on.*
>
> *Always follow the respective fitting and operating instructions.*

The wheel and tyre combinations or changes listed in the vehicle tables refer exclusively to Volkswagen Genuine wheels. Approval of wheel and tyre combinations or a change to wheels from the accessories trade is not possible with the parts certificate attached here.

> ⚠ **WARNING**
>
> *The fitting instructions and torque specifications for wheels from Votex genuine accessories may differ from those intended for wheels from Volkswagen genuine parts.*
>
> *Therefore, always observe the torque settings for the wheel bolts as well as the respective fitting and operating instructions.*

51.1 Passat, Passat Variant, type 3B model year 1997 to model year 2000

Appendix 2 to Parts Certificate 2523/03

Type Approval No.: e1*95/54*0043*00 to e1*95/54*0043*10

Type Approval No.: e1*98/14*D0043*11

Type Approval No.: e1*98/14*0043*12 to e1*98/14*0043*15

Overview

Model engine output	Tyres	Tyre size	Wheel rim	Off-set in mm	Snow chains	Remarks
1.9l 66 kW TDI Saloon/Variant	Standard tyres	195/65 R 15 91T	6 J x 15 ⇒ page 478	45	Yes	Syncro and 4Motion vehicles: Snow chains are permitted on the front wheels only.

satelettronica

Model engine output	Tyres	Tyre size	Wheel rim	Off-set in mm	Snow chains	Remarks
	Modification	205/60 R 15 91T	7 J x 15 ⇒ page 479	45	No	General information on: ◆ Winter tyres ⇒ page 15 ◆ Snow chains ⇒ page 18
		205/55 R 16 91T	7 J x 16 ⇒ page 480	45	No	Tyre makes recommended by Volkswagen: ◆ Summer tyres ⇒ page 659 ◆ All-season tyres ⇒ page 673 ◆ Winter tyres ⇒ page 690
	Winter tyres	195/65 R 15 91Q/T	6 J x 15 ⇒ page 478	45	Yes	
1.6l 74 kW; 1.9l 74 kW, 81 kW und 85 kW TDI Saloon / Estate	Standard tyres	195/65 R 15 91V	6 J x 15 ⇒ page 478	45	Yes	Winter tyres with “V-rating” ⇒ page 16
	Modification	195/65 R 15 91H	6 J x 15 ⇒ page 478	45	Yes	
		205/60 R 15 91H	7 J x 15 ⇒ page 479	45	No	
		205/55 R 16 91H	7 J x 16 ⇒ page 480	45	No	
	Winter tyres	195/65 R 15 91Q/T	6 J x 15 ⇒ page 478	45	Yes	
2.0l 88 kW; 1.8l 92 kW, 110 kW; 2.3l 110 kW, 125 kW; 2.5l 110 kW with front-wheel drive, Saloon/Variant	Standard tyres	195/65 R 15 91V	6 J x 15 ⇒ page 478	45	Yes	
	Modification	205/60 R 15 91V	7 J x 15 ⇒ page 479	45	No	
		205/55 R 16 91V	7 J x 16 ⇒ page 480	45	No	
	Winter tyres	195/65 R 15 91Q/T/H/V	6 J x 15 ⇒ page 478	45	Yes	
2.5l 110 kW Syncro/4Motion Saloon/Variant 2.8l 142 kW front-wheel drive and Syncro/4Motion Saloon/Variant	Standard tyres	195/65 R 15 91W	6 J x 15 ⇒ page 478	45	Yes	
	Modification	205/60 R 15 91W	7 J x 15 ⇒ page 479	45	No	
		205/55 R 16 91W	7 J x 16 ⇒ page 480	45	No	

Copyright by Volkswagen AG. Volkswagen AG does not guarantee or accept any liability with respect to the correctness of information in this document. Copyright by Volkswagen AG. Reproduced by copyright. Copying, in whole or in part, is not permitted without the express authorised by Volkswagen AG. Volkswagen AG does not guarantee or accept any liability with respect to the correctness of information in this document. Copyright by Volkswagen AG. Reproduced by copyright. Copying, in whole or in part, is not permitted without the express authorised by Volkswagen AG. Volkswagen AG does not guarantee or accept any liability with respect to the correctness of information in this document. Copyright by Volkswagen AG. Reproduced by copyright. Copying, in whole or in part, is not permitted without the express authorised by Volkswagen AG. Volkswagen AG does not guarantee or accept any liability with respect to the correctness of information in this document. Copyright by Volkswagen AG. Reproduced by copyright. Copying, in whole or in part, is not permitted for commercial purposes.

satelettronica

Model engine output	Tyres	Tyre size	Wheel rim	Off-set in mm	Snow chains	Remarks
	Winter tyres	195/65 R 15 91Q/T/H/V	6 J x 15 ⇒ page 478	45	Yes	

Tyre pressures can be found on the inside of the fuel tank flap or in ⇒ Maintenance ; Booklet 36

51.2 Passat, Passat Variant, type 3B model year 1997 to model year 2000

Explanation of information on wheels ⇒ page 59

Torque specifications for wheel bolts ⇒ Running gear, axles, steering - front and four-wheel drive; Rep. gr. 44 ; Fitting wheels and tyres; Fitting wheels

Pitch circle diameter:	112 mm
Number of wheel bolt holes:	5

51.2.1 6 J x 15

Caution

Observe the allocation of wheels and tyres to the respective engines, which are listed in the overview table ⇒ page 476 .

Saloon/Estate with front-wheel drive saloon Syncro/4Motion, Estate Syncro/4Motion to maximum permitted axle load of 1,180 kg

8D0 601 025 D - Wheel and tyre combination ⇒ page 476

Size:	6 J x 15
Wheel offset in mm:	45
Wheel load in kg:	590

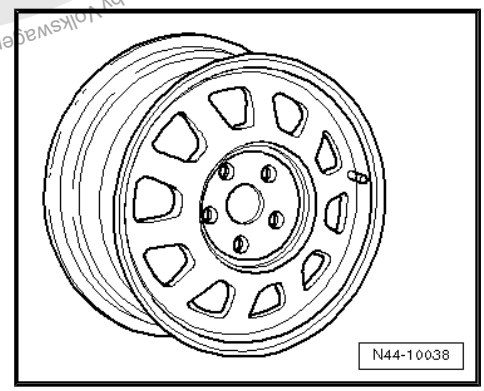

All saloons and Variants with front-wheel drive; all Syncro or 4Motion saloons, all Syncro or 4Motion Variants

8D0 601 027 - Wheel and tyre combination ⇒ page 476

Size:	6 J x 15
Wheel offset in mm:	45
Wheel load in kg:	605

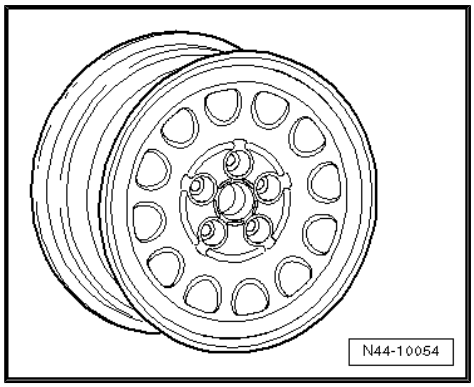

Protected by copyright. Copying for private or commercial purposes, in part or in whole, is not permitted unless authorised by Volkswagen AG. Volkswagen AG does not guarantee or accept any liability with respect to the correctness of information in this document. Copyright by Volkswagen AG.

satelettronica

4A0 601 025 J - Wheel and tyre combination ⇒ page 476

Size:	6 J x 15
Wheel offset in mm:	45
Wheel load in kg:	605

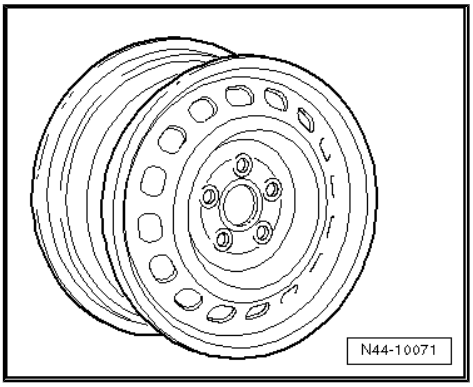

4B0 601 027 - Wheel and tyre combination ⇒ page 476

Size:	6 J x 15
Wheel offset in mm:	45
Wheel load in kg:	605

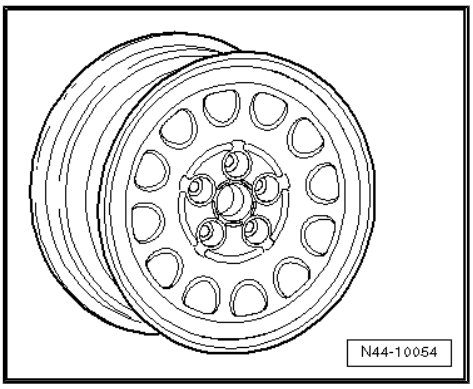

4B0 601 025 J, 4B0 601 025 N - Wheel and tyre combination ⇒ page 476

Size:	6 J x 15
Wheel offset in mm:	45
Wheel load in kg:	605

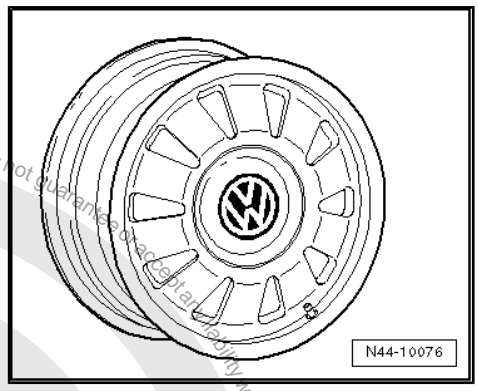

51.2.2 7 J x 15

Caution

Observe the allocation of wheels and tyres to the respective engines, which are listed in the overview table ⇒ page 476 *.*

Protected by copyright. Copying for private or commercial purposes, in whole or in part, is not permitted unless authorised by Volkswagen AG. Volkswagen AG does not guarantee or accept any liability with respect to the correctness of information in this document. Copyright by Volkswagen AG.
satelettronica

Saloons and Estates with front-wheel drive to maximum permitted axle load of 1,150 kg,

Saloon Syncro/4Motion, Variant Syncro/4Motion to maximum axle load 1150 kg

3B0 601 025 A/C - Wheel and tyre combination ⇒ page 477

Size:	7 J x 15
Wheel offset in mm:	45
Wheel load in kg:	575

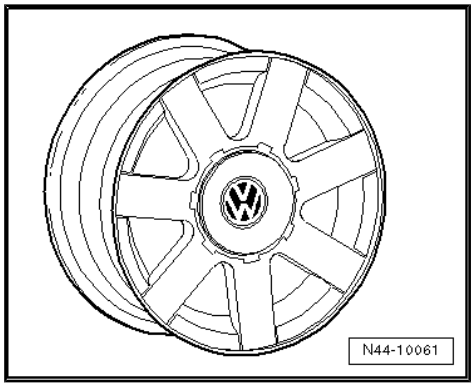

Saloons and Estates with front-wheel drive to maximum permitted axle load of 1,160 kg,

Saloon Syncro/4Motion, Estate Syncro/4Motion to maximum axle load 1,160 kg

3B0 601 027 - Wheel and tyre combination ⇒ page 477

Size:	7 J x 15
Wheel offset in mm:	45
Wheel load in kg:	580

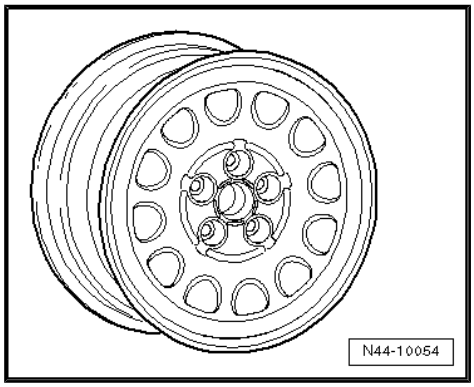

51.2.3 7 J x 16

Caution

Observe the allocation of wheels and tyres to the respective engines, which are listed in the overview table ⇒ page 476 *.*

Saloons and Estates with front-wheel drive to maximum permitted axle load of 1,160 kg,

Saloon Syncro/4Motion, Estate Syncro/4Motion to maximum axle load 1,160 kg

3B0 601 027 A - Wheel and tyre combination ⇒ page 477

Size:	7 J x 16
Wheel offset in mm:	45
Wheel load in kg:	580

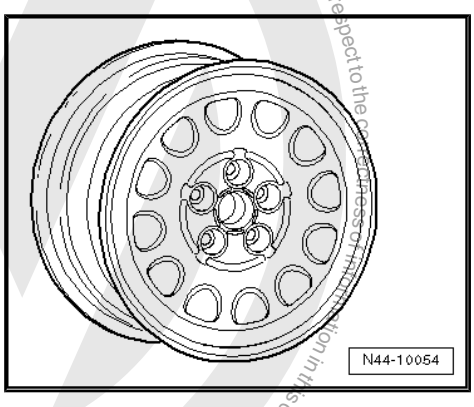

Saloon/Estate with front-wheel drive saloon Syncro/4Motion, Estate Syncro/4Motion to maximum permitted axle load of 1,190 kg

Protected by copyright. Copying for private or commercial purposes, in part or in whole, is not permitted unless authorised by Volkswagen AG. Volkswagen AG does not guarantee or accept any liability with respect to the correctness of information in this document. Copyright by Volkswagen AG.
satelettronica

3B0 601 025 G - Wheel and tyre combination ⇒ page 477

Size:	7 J x 16
Wheel offset in mm:	45
Wheel load in kg:	595

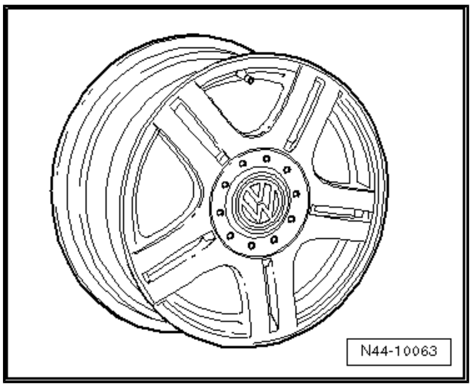

51.3 Passat, Passat Variant, type 3BG model year 2001 to model year 2005

Appendix 2 to Parts Certificate 2523/03

Type Approval No. e1*98/14*0157*00 to e1*98/14*0157*09

Type Approval No.: e1*2001/116*0157*10 to e1*2001/116*0157*12

Overview

Model engine output	Tyres	Tyre size	Wheel rim	Offset in mm	Snow chains	Remarks
1.6l 75 kW Saloon/Variant; 1.9l 74 kW TDI Saloon/Variant	Standard tyres	195/65 R 15 91V	6 J x 15 ⇒ page 483	37	Yes	4Motion vehicles: Snow chains are permitted on the front wheels only.
2.0l 85 kW Saloon/Variant, front-wheel drive and 4Motion	Modification	195/65 R 15 91H	6 J x 15 ⇒ page 483	37	Yes	*17" wheels and tyres: This combination of wheels and tyres is not permitted for vehicles with front-wheel drive and sports running gear.
		205/60 R 15 91H	7 J x 15 ⇒ page 484	37	No	
		205/55 R 16 91H	7 J x 16 ⇒ page 485	37	No	
		225/45 R 17 91H* ⇒ page 481	7 J x 17* ⇒ page 481 ⇒ page 487	37	No	Winter tyres with “V-rating” ⇒ page 16
	Winter tyres	195/65 R 15 91Q/T	6 J x 15 ⇒ page 483	37/45	Yes	
1.8l 110 kW Saloon/Variant; 1.9l 96 kW TDI Saloon/Variant, front-wheel drive or 4Motion;	Standard tyres	195/65 R 15 91V	6 J x 15 ⇒ page 483	37	Yes	General information on: ♦ Winter tyres ⇒ page 15 ♦ Snow chains ⇒ page 18
2.0l 96 kW Saloon/Variant, front-wheel drive	Modification	205/60 R 15 91V	7 J x 15 ⇒ page 484	37	No	Tyre makes recommended by Volkswagen:

Protected by copyright. Copying for private or commercial purposes, in part or in whole, is not permitted unless authorised by Volkswagen AG. Volkswagen AG does not guarantee or accept any liability with respect to the correctness of information in this document. Copyright by Volkswagen AG.

sateletronica

Model engine output	Tyres	Tyre size	Wheel rim	Off-set in mm	Snow chains	Remarks
2.0l 100 kW TDI Saloon/Variant, front-wheel drive		205/55 R 16 91V	7 J x 16 ⇒ page 485	37	No	◆ Summer tyres ⇒ page 659 ◆ All-season tyres ⇒ page 673 ◆ Winter tyres ⇒ page 690
		225/45 R 17 91V* ⇒ page 481	7 J x 17* ⇒ page 481	37	No	
	Winter tyres	195/65 R 15 91Q/T	6 J x 15 ⇒ page 483	37/45	Yes	
V5 2.3l 125 kW Saloon/Variant, front-wheel drive and 4Motion	Standard tyres	205/55 R 16 91V	7 J x 16 ⇒ page 486	37	No	
	Modification	205/55 R 16 91W	7 J x 16 ⇒ page 486	37	No	
		225/45 R 17 91V/W/Y* ⇒ page 481	7 J x 17* ⇒ page 481	37	No	
	Winter tyres	205/55 R 16 91T/V	6 J x 16 ⇒ page 484	40	Yes	
V6 TDI 2.5l 110 kW Saloon/Variant, front-wheel drive and 4Motion	Standard tyres	205/55 R 16 91W	7 J x 16 ⇒ page 486	37	No	
V6 TDI 2.5l 120 kW Saloon/Variant, front-wheel drive;	Modification	225/45 R 17 91W* ⇒ page 481	7 J x 17* ⇒ page 481	37	No	
V6 TDI 2.5l 132 kW Saloon/Variant, 4Motion; V6 2.8l 140 kW Saloon/Variant, front-wheel drive; V6 2.8l 142 kW Saloon/Variant, 4Motion;	Winter tyres	205/55 R 16 91T/V	6 J x 16 ⇒ page 484	40	Yes	

Tyre pressures can be found on the inside of the fuel tank flap or in ⇒ Maintenance ; Booklet 36

51.4 Wheel allocation for Passat, Passat Variant, type 3BG model year 2001 to model year 2005

Explanation of information on wheels ⇒ page 59

Protected by copyright. Copying for private or commercial purposes, in part or in whole, is not permitted unless authorised by Volkswagen AG. Volkswagen AG does not guarantee or accept any liability with respect to the correctness of information in this document. Copyright by Volkswagen AG.

satelettronica

Torque specifications for wheel bolts ⇒ Running gear, axles, steering - front and four-wheel drive; Rep. gr. 44 ; Fitting wheels and tyres; Fitting wheels

Pitch circle diameter:	112 mm
Number of wheel bolt holes:	5

51.4.1 6 J x 15

Caution

Observe the allocation of wheels and tyres to the respective engines, which are listed in the overview table ⇒ page 481 .

Saloon/Variant with front-wheel drive up to and including 110 kW petrol engine and 96 kW and 100 kW diesel engines,

saloon/Variant 4Motion up to and including 110 kW petrol engine, 96 kW diesel engine

4B0 601 027 - Wheel and tyre combination ⇒ page 481

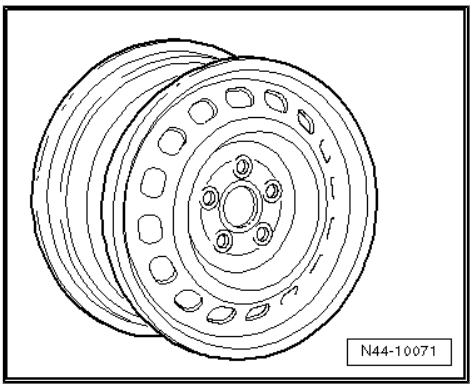

Note

Only permissible with winter tyres.

Size:	6 J x 15
Wheel offset in mm:	45
Wheel load in kg:	605

3B0 601 027 D - Wheel and tyre combination ⇒ page 481

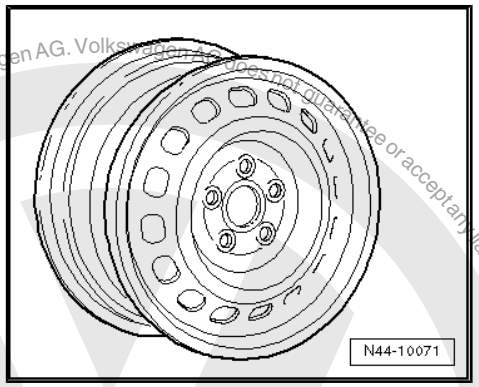

Size:	6 J x 15
Wheel offset in mm:	37
Wheel load in kg:	605

4B0 601 025 J, 4B0 601 025 N - Wheel and tyre combination ⇒ page 481

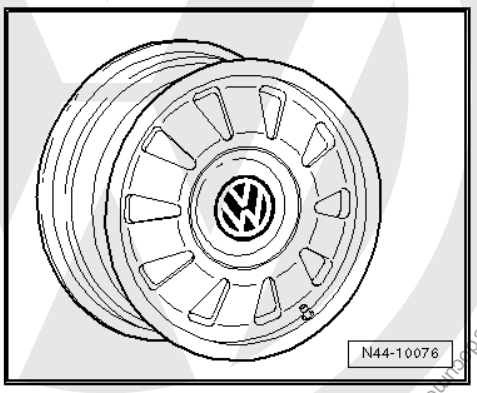

Size:	6 J x 15
Wheel offset in mm:	45
Wheel load in kg:	605

satelettronica
Protected by copyright. Copying for private or commercial purposes, in part or in whole, is not permitted unless authorised by Volkswagen AG. Volkswagen AG does not guarantee or accept any liability with respect to the correctness of information in this document. Copyright by Volkswagen AG.

Protected by copyright. Copying for private or commercial purposes, in part or in whole, is not permitted unless authorised by Volkswagen AG. Volkswagen AG does not guarantee or accept any liability with respect to the correctness of information. Copyright by Volkswagen AG.

51.4.2 7 J x 15

Caution

Observe the allocation of wheels and tyres to the respective engines, which are listed in the overview table ⇒ page 481 *.*

Saloon/Variant with front-wheel drive up to and including 110 kW petrol engine and 96 kW and 100 kW diesel engines,

saloon/Variant 4Motion up to and including 110 kW petrol engine, 96 kW diesel engine

3B0 601 027 E - Wheel and tyre combination ⇒ page 481

Size:	7 J x 15
Wheel offset in mm:	37
Wheel load in kg:	600

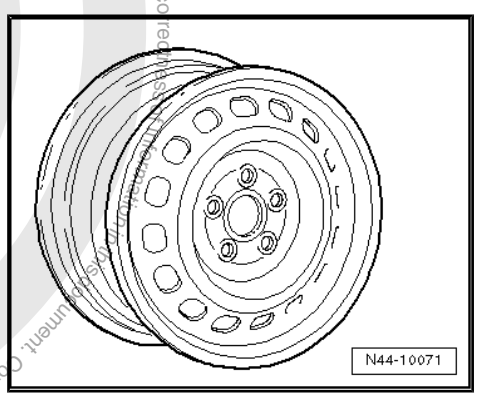

3B0 601 025 K - Wheel and tyre combination ⇒ page 481

Size:	7 J x 15
Wheel offset in mm:	37
Wheel load in kg:	590

Only for vehicles for export to the USA

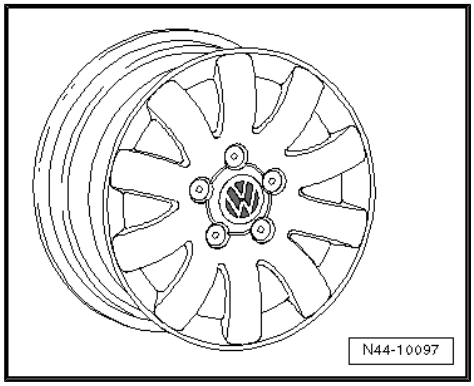

3B0 601 025 S - Wheel and tyre combination ⇒ page 481

Size:	7 J x 15
Wheel offset in mm:	37
Wheel load in kg:	600

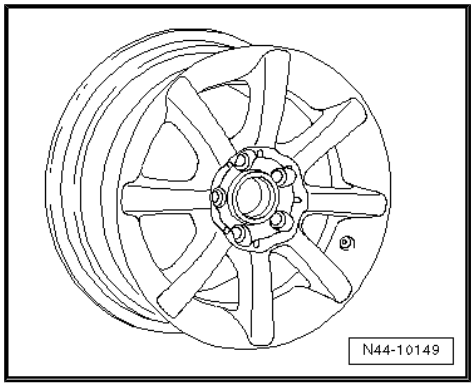

51.4.3 6 J x 16

Caution

Observe the allocation of wheels and tyres to the respective engines, which are listed in the overview table ⇒ page 481 *.*

satelettronica

Saloon/Variant with front-wheel drive V6 TDI, V5, V6 petrol engine,

Saloon/Variant, 4Motion V6 TDI, V5, V6 petrol engines

Winter wheels

8D0 601 025 P - Wheel and tyre combination ⇒ page 482

Size:	6 J x 16
Wheel offset in mm:	40
Wheel load in kg:	615

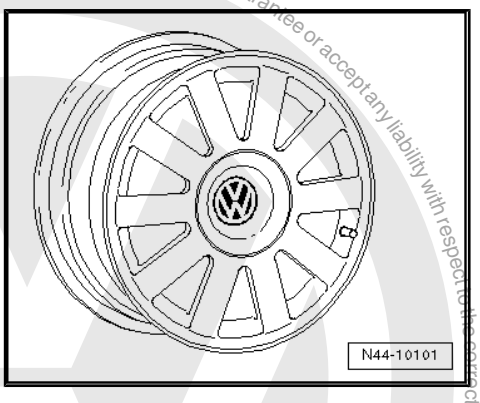

8D0 601 027 A - Wheel and tyre combination ⇒ page 482

Size:	6 J x 16
Wheel offset in mm:	40
Wheel load in kg:	615

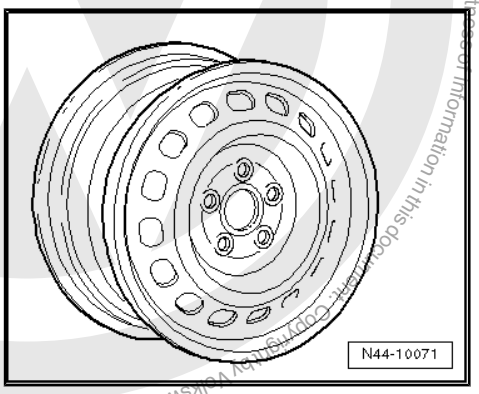

51.4.4 7 J x 16

> ⚠ **Caution**
>
> *Observe the allocation of wheels and tyres to the respective engines, which are listed in the overview table* *⇒ page 481* *.*

Saloon/Variant with front-wheel drive up to and including 110 kW petrol engine and 96 kW and 100 kW diesel engines,

saloon/Variant 4Motion up to and including 110 kW petrol engine, 96 kW diesel engine

3B0 601 027 F - Wheel and tyre combination ⇒ page 481

Size:	7 J x 16
Wheel offset in mm:	37
Wheel load in kg:	605

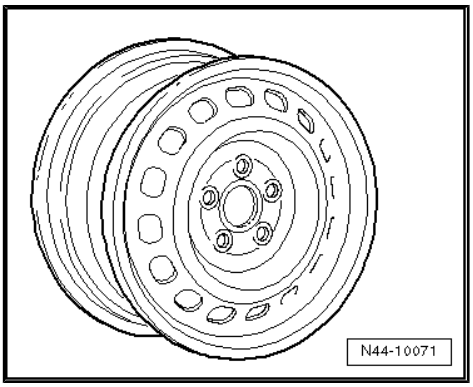

Protected by copyright. Copying for private or commercial purposes, in part or in whole, is not permitted unless authorised by Volkswagen AG. Volkswagen AG does not guarantee or accept any liability with respect to the correctness of information in this document. Copyright by Volkswagen AG.
satelettronica

3B0 601 025 L - Wheel and tyre combination ⇒ page 481

Size:	7 J x 16
Wheel offset in mm:	37
Wheel load in kg:	605

Saloon/Variant with front-wheel drive V6 TDI, V5, V6 petrol engines

Saloon/Variant, 4Motion V6 TDI, V5, V6 petrol engines

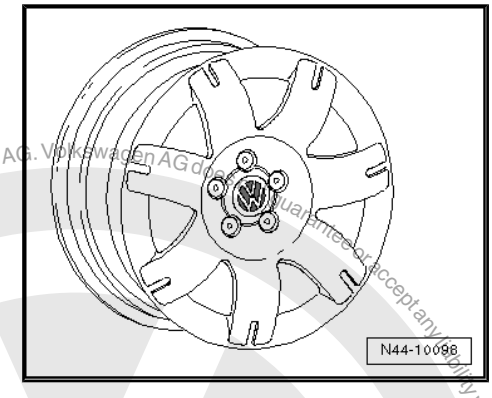

3B0 601 027 F - Wheel and tyre combination ⇒ page 482

Size:	7 J x 16
Wheel offset in mm:	37
Wheel load in kg:	605

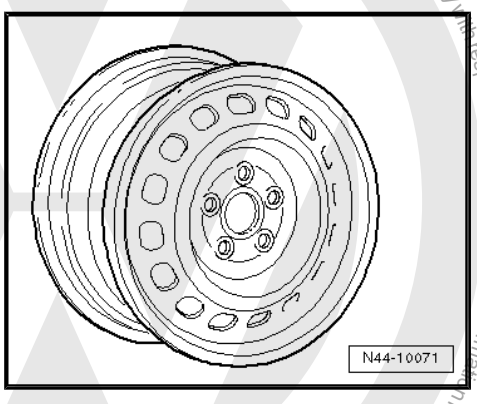

3B0 601 025 L - Wheel and tyre combination ⇒ page 482

Size:	7 J x 16
Wheel offset in mm:	37
Wheel load in kg:	605

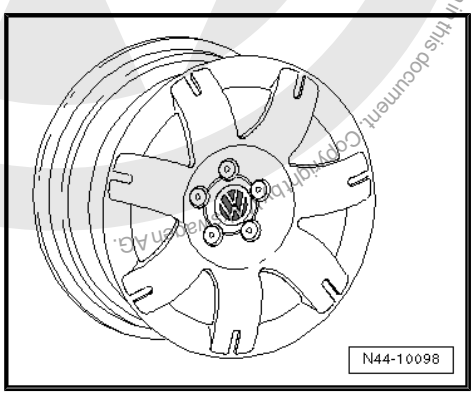

3B0 601 025 AD - Wheel and tyre combination ⇒ page 482

Size:	7 J x 16
Wheel offset in mm:	37
Wheel load in kg:	620

Only for vehicles for export to the USA

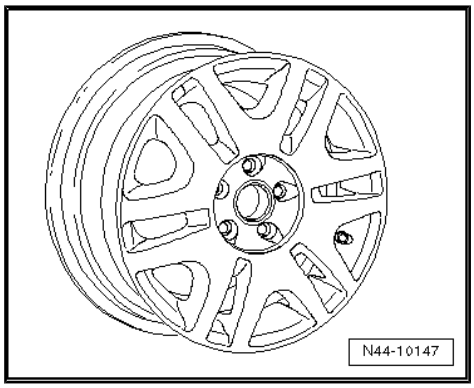

Protected by copyright. Copying for private or commercial purposes, in part or in whole, is not permitted unless authorised by Volkswagen AG. Volkswagen AG does not guarantee or accept any liability with respect to the correctness of information in this document. Copyright by Volkswagen AG.
satelettronica

3B0 601 025 T - Wheel and tyre combination ⇒ page 481

Size:	7 J x 16
Wheel offset in mm:	37
Wheel load in kg:	620

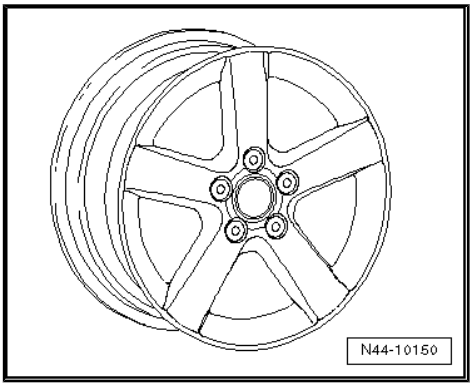

3B0 601 025 AA - Wheel and tyre combination ⇒ page 481

Size:	7 J x 16
Wheel offset in mm:	37
Wheel load in kg:	620

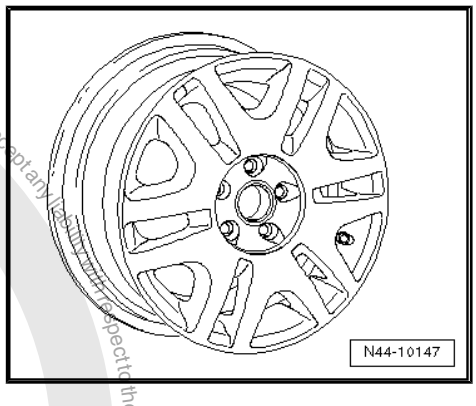

51.4.5 7 J x 17

Note

Not permitted for vehicles with front-wheel drive in conjunction with sports running gear.

Caution

Observe the allocation of wheels and tyres to the respective engines, which are listed in the overview table ***⇒ page 481*** ***.***

Protected by copyright. Copyright by Volkswagen AG.
Copyright by Volkswagen AG. Volkswagen AG does not guarantee or accept any liability with respect to the correctness of information in this document. Copyright by Volkswagen AG. Reproduction, in part or in whole, is not permitted unless authorised by Volkswagen AG for commercial purposes or private or commercial purposes.
satelettronica

Saloon/Variant with front-wheel drive up to and including 110 kW petrol engine and 96 kW and 100 kW diesel engines,

Saloon/Variant 4Motion up to and including 110 kW petrol engine and 96 kW diesel engine,

Saloon/Variant with front-wheel drive V6 TDI, V5, V6 petrol engine,

Saloon/Variant, 4Motion V6 TDI, V5, V6 petrol engines

3B0 601 025 M - Wheel and tyre combination ⇒ page 481

Size:	7 J x 17
Wheel offset in mm:	37
Wheel load in kg:	605

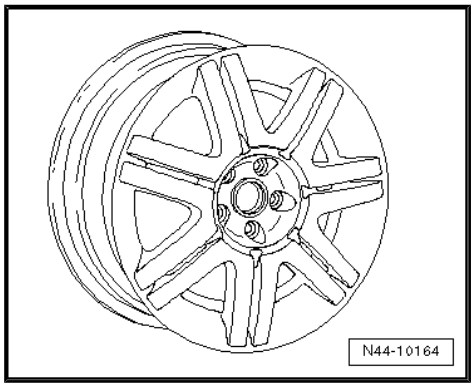

3B0 601 025 P - Wheel and tyre combination ⇒ page 481

Size:	7 J x 17
Wheel offset in mm:	37
Wheel load in kg:	605

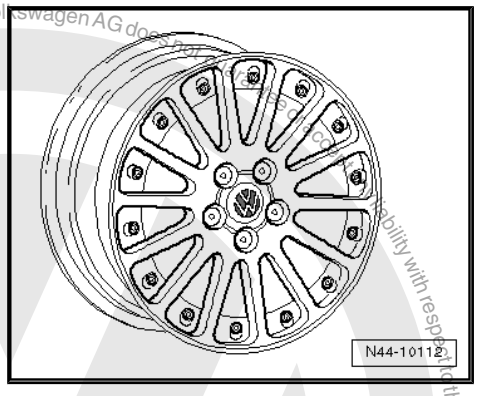

51.5 Passat W8 4Motion, type 3BS model year 2002 to model year 2005

Appendix 2 to Parts Certificate 2523/03

Type Approval No.: e1*98/14*0173*00 to e1*98/14*0173*02

Type Approval No.: e1*2001/116*0173*03 to e1*2001/116*0173*04

Overview

Model engine output	Tyres	Tyre size	Wheel rim	Off-set in mm	Snow chains	Remarks
4.0l 202 kW Saloon/Variant	Standard tyres	225/45 R 17 91Y	7 1/2 J x 17 ⇒ page 490	45	No	Snow chains: Only the snow chains listed are permissible! Article No. ⇒ page 489
	Modification	No changes are permissible apart from the standard wheel and tyre combinations!				* 4Motion vehicles: Snow chains are permitted on the front wheels only.

Protected by copyright. Copying for private or commercial purposes, in part or in whole, is not permitted unless authorised by Volkswagen AG. Volkswagen AG does not guarantee or accept any liability with respect to the correctness of information in this document. Copyright by Volkswagen AG.

satelettronica

Reproduction by copyright. Copyright by Volkswagen AG. Volkswagen AG does not guarantee or accept any liability with respect to the correctness of information in this document. Copying for private or commercial purposes, in part or in whole, is not permitted unless authorised by Volkswagen AG.

Model engine output	Tyres	Tyre size	Wheel rim	Off-set in mm	Snow chains	Remarks
	Winter tyres	205/50 R 17 93T/H/V* ⇒ page 488	6 J x 17 ⇒ page 490	42	Yes	General information on: ◆ Winter tyres ⇒ page 15 ◆ Snow chains ⇒ page 18 Tyre makes recommended by Volkswagen: ◆ Summer tyres ⇒ page 660 ◆ All-season tyres ⇒ page 673 ◆ Winter tyres ⇒ page 691 Winter tyres with “V-rating” ⇒ page 16

Tyre pressures can be found on the inside of the fuel tank flap or in ⇒ Maintenance ; Booklet 36

Approved snow chains, Passat W8

The following snow chains are only permissible in combination with the adjacent wheel and tyre combination!

Chain manufacturer Item no.	Accessory part number	Tyre size	Wheel rim	Part no.
Ottinger 100 956	-	205/50 R 17 93T/H/V ⇒ page 489	6 J x 17 offset 42	3B7 601 025 C
Rud 46022	Z 091 589			

51.6 Wheel allocation for Passat W8 4Motion, type 3BS model year 2002 to model year 2005

Explanation of information on wheels ⇒ page 59

Torque specifications for wheel bolts ⇒ Running gear, axles, steering - front and four-wheel drive; Rep. gr. 44 ; Fitting wheels and tyres; Fitting wheels

Pitch circle diameter:	112 mm
Number of wheel bolt holes:	5

51.6.1 7 J x 16

Caution

Observe the allocation of wheels and tyres to the respective engines, which are listed in the overview table ⇒ page 488 .

satelettronica

Only for vehicles for export to the USA

3B7 601 025 F - Wheel and tyre combination

Size:	7 J x 16
Wheel offset in mm:	45
Wheel load in kg:	630

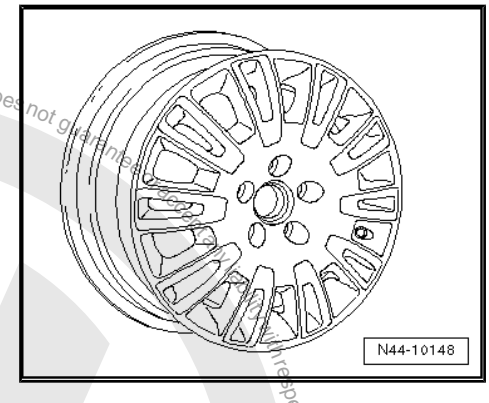

51.6.2 6 J x 17

Caution

Observe the allocation of wheels and tyres to the respective engines, which are listed in the overview table ⇒ page 488 *.*

For winter tyres

3B7 601 025 C - Wheel and tyre combination ⇒ page 489

Size:	6 J x 17
Wheel offset in mm:	42
Wheel load in kg:	620

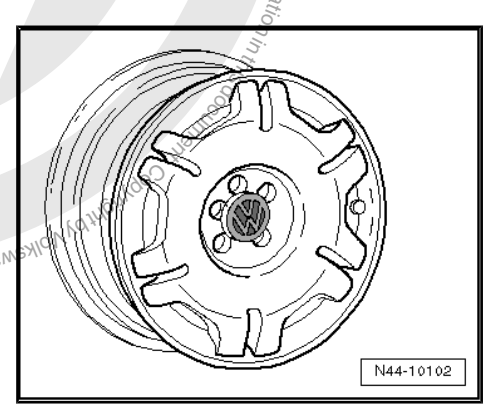

51.6.3 7 1/2 J x 17

Caution

Observe the allocation of wheels and tyres to the respective engines, which are listed in the overview table ⇒ page 488 *.*

3B7 601 025 A, 3B7 601 025 G - Wheel and tyre combination ⇒ page 488

Size:	7 1/2 J x 17
Wheel offset in mm:	45
Wheel load in kg:	630

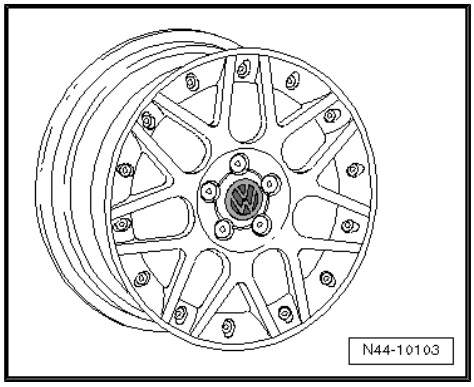

Protected by copyright. Copying for private or commercial purposes, in part or in whole, is not permitted unless authorised by Volkswagen AG. Volkswagen AG does not guarantee or assume any liability with respect to the correctness of information in this document. Copyright by Volkswagen AG.

satelettronica

3B7 601 025 D - Wheel and tyre combination ⇒ page 488

Size:	7 1/2 J x 17
Wheel offset in mm:	45
Wheel load in kg:	660

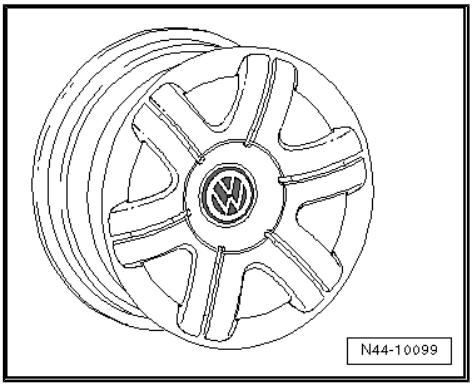

51.7 Passat Protect, type 3BL model year 2002 to model year 2005

Appendix 2 to Parts Certificate 2523/03

Type approval No.: e1*98/14PD0162*00 to e1*98/14PD0162*03

Type approval No.: e1*2001/116*0162*04

Overview

Model engine output	Tyres	Tyre size	Wheel rim	Off-set in mm	Snow chains	Remarks
2.8l 142 kW 1.9l 96 kW TDI	Standard tyres	205/55 R 16 94W reinforced/XL	7 J x 16 ⇒ page 492	45	No	Snow chains: Only the snow chains listed are permissible! Article No. ⇒ page 492
	Modification	215/55 R 16 97Y reinforced/XL	7 J x 16 ⇒ page 492	45	No	* 4Motion vehicles: Snow chains are permitted on the front wheels only.
	Winter tyres	205/55 R 16 94T/H/V* ⇒ page 491 reinforced/XL	6 J x 16 ⇒ page 492	45	Yes	General information on: ◆ Winter tyres ⇒ page 15 ◆ Snow chains ⇒ page 18
4.0l 202 kW	Standard tyres	215/55 R 16 97Y reinforced/XL	7 J x 16 ⇒ page 492	45	No	Tyre makes recommended by Volkswagen: ◆ Summer tyres ⇒ page 660 ◆ Winter tyres ⇒ page 691
	Modification	No changes are permissible apart from the standard wheel and tyre combinations!				
	Winter tyres	205/55 R 16 94T/H/V* ⇒ page 491 reinforced/XL	6 J x 16 ⇒ page 492	45	Yes	Winter tyres with "V-rating" ⇒ page 16

Tyre pressures can be found on the inside of the fuel tank flap or in ⇒ Maintenance ; Booklet 36

satelettronica

Protected by copyright. Copyright by Volkswagen AG. Volkswagen AG does not guarantee or accept any liability with respect to the correctness of information in this document. Copyright by Volkswagen AG. Reproduced unauthorised by Volkswagen AG. Protected by copyright. Copyright by Volkswagen AG. Reproduced unauthorised by Volkswagen AG. Volkswagen AG does not guarantee or accept any liability with respect to the correctness of information in this document. Copyright by Volkswagen AG.

Approved snow chains, Passat Protect

The following snow chains are only permissible in combination with the adjacent wheel and tyre combination!

Chain manufacturer Item no.	Accessory part number	Tyre size	Wheel rim	Part no.
Rud	000 091 386 K	205/55 R 16 94T/H/V* ⇒ page 491 reinforced/XL	6 J x 16 offset 45	3B7 601 025 B

51.8 Wheel allocation for Passat Protect, type 3BL model year 2002 to model year 2005

Explanation of information on wheels ⇒ page 59

Wheel bolt torque settings ⇒ Running gear, axles, steering - Protect; Rep. gr. 44 ; Wheel bolt torque settings

Pitch circle diameter:	112 mm
Number of wheel bolt holes:	5

51.8.1 6 J x 16

> ⚠ **Caution**
>
> *Observe the allocation of wheels and tyres to the respective engines, which are listed in the overview table ⇒ page 491 .*

For winter tyres

Only for vehicles to maximum permissible axle load of 1,320 kg

3B7 601 025 B - Wheel and tyre combination ⇒ page 491

Size:	6 J x 16
Wheel offset in mm:	45
Wheel load in kg:	660

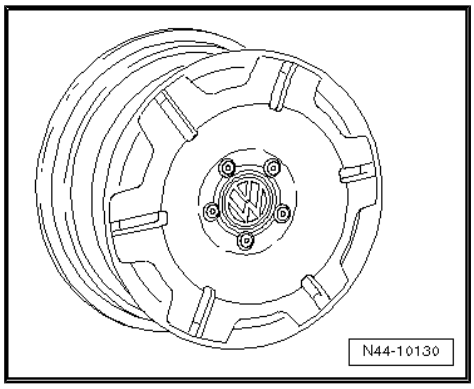

51.8.2 7 J x 16

> ⚠ **Caution**
>
> *Observe the allocation of wheels and tyres to the respective engines, which are listed in the overview table ⇒ page 491 .*

satelettronica

4B0 601 025 T - Wheel and tyre combination ⇒ page 491

Size:	7 J x 16
Wheel offset in mm:	45
Wheel load in kg:	670

Only for vehicles to maximum permissible axle load of 1,320 kg

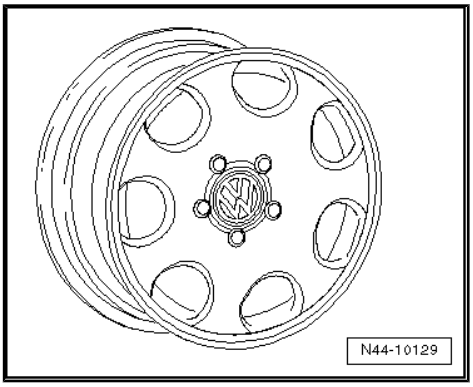

3B7 601 025 - Wheel and tyre combination ⇒ page 491

Size:	7 J x 16
Wheel offset in mm:	45
Wheel load in kg:	660

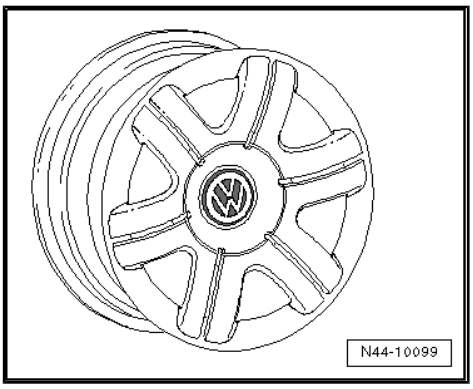

Protected by copyright. Copying for private or commercial purposes, in part or in whole, is not permitted unless authorised by Volkswagen AG. Volkswagen AG does not guarantee or accept any liability with respect to the correctness of information in this document. Copyright by Volkswagen AG.

satelettronica

52 Passat saloon from model year 2006

General

Volkswagen vehicles are built according to the latest findings in safety engineering. To keep it that way, we recommend the use of only genuine Volkswagen spare parts. You can recognise this by the VW Audi logo and by the part number. It has been established that these parts are reliable, safe and suitable.

Despite constant appraisal of the market, we cannot assess other products on these points, even when in isolated cases they have been passed by official inspectors or have been granted official approval. Therefore, we cannot, of course, assume any liability if these products are installed.

> ⚠ **WARNING**
>
> *The products from Volkswagen genuine parts and Votex genuine accessories may differ in fitting requirements, torque specifications and so on.*
>
> *Always follow the respective fitting and operating instructions.*

The wheel and tyre combinations or changes listed in the vehicle tables refer exclusively to Volkswagen Genuine wheels. Approval of wheel and tyre combinations or a change to wheels from the accessories trade is not possible with the certificate statement attached here.

> ⚠ **WARNING**
>
> *The fitting instructions and torque specifications for wheels from Votex genuine accessories may differ from those intended for wheels from Volkswagen genuine parts.*
>
> *Therefore, always observe the torque settings for the wheel bolts as well as the respective fitting and operating instructions.*

52.1 Passat saloon, type 3C model year 2006

Appendix for certificate statement 8106807121

The certificate statement can be found on the Volkswagen ServiceNet under Accessories/Tyres, Wheels and Tyres, Wheels and Tyres Guide.

Type Approval No.: e1*2001/116*0307*00 to e1*2001/116*0307*09

Overview

Model engine output	Tyres	Tyre size	Wheel rim	Off-set in mm	Snow chains	Remarks
1.6l 75 kW; 1.6l 85 kW petrol engines;	Standard tyres	205/55 R 16 91H	$6^1/_2$ J x 16 ⇒ page 516	42	Yes	General information on: ◆ Winter tyres ⇒ page 15 ◆ Snow chains ⇒ page 18
1.9l 77 kW TDI; 2.0l 88 kW TDI; 2.0l 90 kW TDI diesel engines	Modification	215/55 R 16 93H	$6^1/_2$ J x 16 ⇒ page 516	42	No	

Protected by copyright. Copying for private or commercial purposes, in part or in whole, is not permitted unless authorised by Volkswagen AG. Volkswagen AG does not guarantee or accept any liability with respect to the correctness of information in this document. Copyright by Volkswagen AG.
satelettronica

Model engine output	Tyres	Tyre size	Wheel rim	Off-set in mm	Snow chains	Remarks
		205/55 R 16 91H	7 J x 16 ⇒ page 517	45	No	Tyre makes recommended by Volkswagen: ◆ Summer tyres ⇒ page 660 ◆ All-season tyres ⇒ page 674 ◆ Winter tyres ⇒ page 691
		215/55 R 16 93H	7 J x 16 ⇒ page 517	45	No	
		235/45 R 17 94V	$7^1/_2$ J x 17 ⇒ page 519	47	No	
		235/40 R 18 95Y* ⇒ page 495	8 J x 18 ⇒ page 522	44	No	◆ * 235/40 R 18 95Y tyres on 8 J x 18 rims with an offset of 44 are only possible if the specified conditions ⇒ page 522 are met! ◆ 235/40 R 18 95W tyres on 8 J x 18 rims with an offset of 44 may be used instead of 235/40 R 18 95Y tyres on 8 J x 18 rims with an offset of 44. Observe authorisation by Kraftfahrt-Bundesamtes (German road traffic authority) “Authorisation of 95W tyres for Passat”. This is located on the Volkswagen ServiceNet under Accessories/ Tyres, Wheels and Tyres, Wheels and Tyres Guide.
	Winter tyres	205/55 R 16 91H/V	$6^1/_2$ J x 16 ⇒ page 516	42	Yes	
		205/50 R 17 93H/V	6 J x 17 ⇒ page 519	45	Yes	
2.0l 110 kW petrol engine	Standard tyres	205/55 R 16 91V	$6^1/_2$ J x 16 ⇒ page 516	42	Yes	
	Modification	215/55 R 16 93V	$6^1/_2$ J x 16 ⇒ page 516	42	No	
		205/55 R 16 91V	7 J x 16 ⇒ page 517	45	No	
		215/55 R 16 93V	7 J x 16 ⇒ page 517	45	No	

Protected by copyright. Copying for private or commercial purposes, in part or in whole, is not permitted unless authorised by Volkswagen AG. Volkswagen AG does not guarantee or accept any liability with respect to the correctness of information in this document. Copyright by Volkswagen AG.

satelettronica

Model engine output	Tyres	Tyre size	Wheel rim	Off-set in mm	Snow chains	Remarks
		235/45 R 17 94V	7 1/2 J x 17 ⇒ page 519	47	No	
		235/40 R 18 95Y* ⇒ page 495	8 J x 18 ⇒ page 522	44	No	
	Winter tyres	205/55 R 16 91H/V	6 1/2 J x 16 ⇒ page 516	42	Yes	
		205/50 R 17 93H/V	6 J x 17 ⇒ page 519	45	Yes	
2.0l 100 kW TDI 2.0l 103 kW TDI 2.0l 120 kW TDI 2.0l 125 kW TDI diesel engines	Standard tyres	205/55 R 16 94V	6 1/2 J x 16 ⇒ page 516	42	Yes	Vehicles with the 100/103/120/125 kW TDI engine that have the load index LI 94 entered in the vehicle documents (205/55 R16 94V), may also be fitted with winter tyres with load index LI 91 (205/55 R 16 91H). To do this, the "approval certificate and permit for submission to the registration authority" have to be kept in the vehicle (in Germany) with inspection report no. 1423/07.
	Modification	215/55 R 16 93V	6 1/2 J x 16 ⇒ page 516	42	No	
		205/55 R 16 94V	7 J x 16 ⇒ page 517	45	No	
		215/55 R 16 93V	7 J x 16 ⇒ page 517	45	No	
		235/45 R 17 94V	7 1/2 J x 17 ⇒ page 519	47	No	
		235/40 R 18 95Y* ⇒ page 495	8 J x 18 ⇒ page 522	44	No	
	Winter tyres	205/55 R 16 91H/V	6 1/2 J x 16 ⇒ page 516	42	Yes	
		205/50 R 17 93H/V	6 J x 17 ⇒ page 519	45	Yes	
2.0l 147 kW petrol engine	Standard tyres	205/55 R 16 91W	6 1/2 J x 16 ⇒ page 516	42	Yes	
	Modification	215/55 R 16 93W	6 1/2 J x 16 ⇒ page 516	42	No	
		215/55 R 16 93W	7 J x 16 ⇒ page 517	45	No	
		235/45 R 17 94W	7 1/2 J x 17 ⇒ page 519	47	No	
		235/40 R 18 95Y* ⇒ page 495	8 J x 18 ⇒ page 522	44	No	

Protected by copyright. Copying for private or commercial purposes, in part or in whole, is not permitted unless authorised by Volkswagen AG. Volkswagen AG does not guarantee or accept any liability with respect to the correctness of information in this document. Copyright by Volkswagen AG.

satelettronica

Model engine output	Tyres	Tyre size	Wheel rim	Off-set in mm	Snow chains	Remarks
	Winter tyres	205/55 R 16 91H/V	$6^1/_2$ J x 16 ⇒ page 516	42	Yes	
		205/50 R 17 93H/V	6 J x 17 ⇒ page 519	45	Yes	
3.2l 184 kW petrol engine	Standard tyres	235/45 R 17 94W	$7^1/_2$ J x 17 ⇒ page 519	47	No	
	Modification	235/40 R 18 95Y* ⇒ page 495	8 J x 18 ⇒ page 522	44	No	
	Winter tyres	205/50 R 17 93H/V	6 J x 17 ⇒ page 519	45	Yes	

Tyre inflation pressures are located on a sticker in the fuel tank flap or in ⇒ Maintenance ; Booklet ; Check tyres: condition, profile, inflation pressure, depth of tread .

52.2 Passat saloon, type 3C model year 2007 to model year 2008

Caution

*Observe wheel and tyre combinations for vehicles as of type approval number: e1*2001/116*0307*13 ⇒ page 501 .*

Appendix for certificate statement 8106807121

The certificate statement can be found on the Volkswagen ServiceNet under Accessories/Tyres, Wheels and Tyres, Wheels and Tyres Guide.

Type Approval No.: e1*2001/116*0307*10 to e1*2001/116*0307*12

Overview

Model engine output	Tyres	Tyre size	Wheel rim	Off-set in mm	Snow chains	Remarks
1.6l 75 kW; 1.6l 85 kW petrol engines;	Standard tyres	205/55 R 16 91H	$6^1/_2$ J x 16 ⇒ page 516	42	Yes	
1.9l 77 kW TDI; diesel engines	Modification	215/55 R 16 93H/V	$6^1/_2$ J x 16 ⇒ page 516	42	No	General information on: ◆ Winter tyres ⇒ page 15 ◆ Snow chains ⇒ page 18
		205/55 R 16 91H/V	7 J x 16 ⇒ page 517	45	No	Tyre makes recommended by Volkswagen:

satelettronica

Model engine output	Tyres	Tyre size	Wheel rim	Off-set in mm	Snow chains	Remarks
		215/55 R 16 93H/V	7 J x 16 ⇒ page 517	45	No	◆ Summer tyres ⇒ page 660 ◆ All-season tyres ⇒ page 674 ◆ Winter tyres ⇒ page 691
		235/45 R 17 94H/V	7 1/2 J x 17 ⇒ page 519	47	No	
		235/40 R 18 95Y* ⇒ page 498	8 J x 18 ⇒ page 522	44	No	◆ * 235/40 R 18 95Y tyres on 8 J x 18 rims with an offset of 44 are only possible if the specified conditions ⇒ page 522 are met! ◆ 235/40 R 18 95W tyres on 8 J x 18 rims with an offset of 44 may be used instead of 235/40 R 18 95Y tyres on 8 J x 18 rims with an offset of 44. Observe authorisation by Kraftfahrt-Bundesamtes (German road traffic authority) “Authorisation of 95W tyres for Passat”. This is located on the Volkswagen ServiceNet under Accessories/ Tyres, Wheels and Tyres, Wheels and Tyres Guide.
	Winter tyres	205/55 R 16 91H/V	6 1/2 J x 16 ⇒ page 516	42	Yes	
		205/50 R 17 93H/V	6 J x 17 ⇒ page 519	45	Yes	
2.0l 110 kW petrol engine	Standard tyres	205/55 R 16 91V	6 1/2 J x 16 ⇒ page 516	42	Yes	
	Modification	215/55 R 16 93V	6 1/2 J x 16 ⇒ page 516	42	No	
		205/55 R 16 91V	7 J x 16 ⇒ page 517	45	No	
		215/55 R 16 93V	7 J x 16 ⇒ page 517	45	No	
		235/45 R 17 94V	7 1/2 J x 17 ⇒ page 519	47	No	

Protected by copyright. Copying for private or commercial purposes, in part or in whole, is not permitted unless authorised by Volkswagen AG. Volkswagen AG does not guarantee or accept any liability with respect to the correctness of information in this document. Copyright by Volkswagen AG.
satelettronica

Model engine output	Tyres	Tyre size	Wheel rim	Off-set in mm	Snow chains	Remarks
		235/40 R 18 95Y* ⇒ page 498	8 J x 18 ⇒ page 522	44	No	
	Winter tyres	205/55 R 16 91H/V	6 1/2 J x 16 ⇒ page 516	42	Yes	
		205/50 R 17 93H/V	6 J x 17 ⇒ page 519	45	Yes	
2.0l 100 kW TDI diesel engine with automatic/direct shift gearbox 2.0l 103 kW TDI diesel engine 4MOTION 2.0l 103 kW TDI diesel engine with automatic/direct shift gearbox and front-wheel drive	Standard tyres	205/55 R 16 94H	6 1/2 J x 16 ⇒ page 516	42	Yes	Vehicles with the 100/103 kW TDI engine that have the load index LI 94 entered in the vehicle documents (205/55 R16 94V), may also be fitted with winter tyres with load index LI 91 (205/55 R 16 91H). To do this, the "approval certificate and permit for submission to the registration authority" have to be kept in the vehicle (in Germany) with inspection report no. 1423/07.
	Modification	215/55 R 16 93H/V	6 1/2 J x 16 ⇒ page 516	42	No	
		205/55 R 16 94H/V	7 J x 16 ⇒ page 517	45	No	
		215/55 R 16 93H/V	7 J x 16 ⇒ page 517	45	No	
		235/45 R 17 94H/V	7 1/2 J x 17 ⇒ page 519	47	No	
		235/40 R 18 95Y* ⇒ page 498	8 J x 18 ⇒ page 522	44	No	
	Winter tyres	205/55 R 16 91H/V	6 1/2 J x 16 ⇒ page 516	42	Yes	
		205/50 R 17 93H/V	6 J x 17 ⇒ page 519	45	Yes	
2.0l 100 kW TDI diesel engine with manual gearbox 2.0l 103 kW TDI diesel engine with manual gearbox and front-wheel drive 2.0l 120 kW TDI 2.0l 125 kW TDI diesel engines	Standard tyres	205/55 R 16 94V	6 1/2 J x 16 ⇒ page 516	42	Yes	Vehicles with the 100/103/120/125 kW TDI engine that have the load index LI 94 entered in the vehicle documents (205/55 R16 94V), may also be fitted with winter tyres with load index LI 91 (205/55 R 16 91H). To do this, the "approval certificate and permit for submission to the registration authority" have to be kept in the vehicle (in Germany) with inspection report no. 1423/07.
	Modification	215/55 R 16 93V	6 1/2 J x 16 ⇒ page 516	42	No	
		205/55 R 16 94V	7 J x 16 ⇒ page 517	45	No	
		215/55 R 16 93V	7 J x 16 ⇒ page 517	45	No	

Protected by copyright. Copying for private or commercial purposes, in part or in whole, is not permitted unless authorised by Volkswagen AG. Volkswagen AG does not guarantee or accept any liability with respect to the correctness of information in this document. Copyright by Volkswagen AG.

satelettronica

Model engine output	Tyres	Tyre size	Wheel rim	Off-set in mm	Snow chains	Remarks
		235/45 R 17 94V	$7^1/_2$ J x 17 ⇒ page 519	47	No	
		235/40 R 18 95Y* ⇒ page 498	8 J x 18 ⇒ page 522	44	No	
	Winter tyres	205/55 R 16 91H/V	$6^1/_2$ J x 16 ⇒ page 516	42	Yes	
		205/50 R 17 93H/V	6 J x 17 ⇒ page 519	45	Yes	
2.0l 147 kW petrol engine	Standard tyres	205/55 R 16 91W	$6^1/_2$ J x 16 ⇒ page 516	42	Yes	
	Modification	215/55 R 16 93W	$6^1/_2$ J x 16 ⇒ page 516	42	No	
		215/55 R 16 93W	7 J x 16 ⇒ page 517	45	No	
		235/45 R 17 94W	$7^1/_2$ J x 17 ⇒ page 519	47	No	
		235/40 R 18 95Y* ⇒ page 498	8 J x 18 ⇒ page 522	44	No	
	Winter tyres	205/55 R 16 91H/V	$6^1/_2$ J x 16 ⇒ page 516	42	Yes	
		205/50 R 17 93H/V	6 J x 17 ⇒ page 519	45	Yes	
3.2l 184 kW petrol engine	Standard tyres	235/45 R 17 94W	$7^1/_2$ J x 17 ⇒ page 519	47	No	
	Modification	235/40 R 18 95Y* ⇒ page 498	8 J x 18 ⇒ page 522	44	No	
	Winter tyres	205/50 R 17 93H/V	6 J x 17 ⇒ page 519	45	Yes	

Volkswagen AG does not guarantee or accept any liability with respect to the correctness of information in this document. Copyright by Volkswagen AG.
Protected by copyright. Copying for private or commercial purposes, in part or in whole, is not permitted unless authorised by Volkswagen AG.
satelettronica

Tyre inflation pressures are located on a sticker in the fuel tank flap or in ⇒ Maintenance ; Booklet ; Check tyres: condition, profile, inflation pressure, depth of tread .

Appendix for certificate statement 8106807121

The certificate statement can be found on the Volkswagen ServiceNet under Accessories/Tyres, Wheels and Tyres, Wheels and Tyres Guide.

Type Approval No.: e1*2001/116*0307*13 to e1*2001/116*0307*14

Overview

Model engine output	Tyres	Tyre size	Wheel rim	Off-set in mm	Snow chains	Remarks
1.6l 75 kW; 1.6l 85 kW 1.4l 90 kW petrol engines;	Standard tyres	205/55 R 16 91H	6 1/2 J x 16 ⇒ page 516	42	Yes	
1.9l 77 kW TDI; diesel engines	Modification	215/55 R 16 93H/V	6 1/2 J x 16 ⇒ page 516	42	No	General information on: ◆ Winter tyres ⇒ page 15 ◆ Snow chains ⇒ page 18
		205/55 R 16 91H/V	7 J x 16 ⇒ page 517	45	No	Tyre makes recommended by Volkswagen:
		215/55 R 16 93H/V	7 J x 16 ⇒ page 517	45	No	◆ Summer tyres ⇒ page 660 ◆ All-season tyres ⇒ page 674 ◆ Winter tyres ⇒ page 691
		235/45 R 17 94H/V	7 1/2 J x 17 ⇒ page 519	47	No	
		235/40 R 18 95Y* ⇒ page 501	8 J x 18 ⇒ page 522	44	No	◆ * 235/40 R 18 95Y tyres on 8 J x 18 rims with an offset of 44 are only possible if the specified conditions ⇒ page 522 are met!
	Winter tyres	205/55 R 16 91H/V	6 1/2 J x 16 ⇒ page 516	42	Yes	

Protected by copyright. Copyright by Volkswagen AG. Volkswagen AG does not guarantee or accept any liability with respect to the correctness of information in this document. Copying for private or commercial purposes, in part or in whole, is not permitted unless authorised by Volkswagen AG.
satelettronica

Model engine output	Tyres	Tyre size	Wheel rim	Off-set in mm	Snow chains	Remarks
		205/50 R 17 93H/V	6 J x 17 ⇒ page 519	45	Yes	♦ 235/40 R 18 95W tyres on 8 J x 18 rims with an offset of 44 may be used instead of 235/40 R 18 95Y tyres on 8 J x 18 rims with an offset of 44. Observe authorisation by Kraftfahrt-Bundesamtes (German road traffic authority) "Authorisation of 95W tyres for Passat". This is located on the Volkswagen ServiceNet under Accessories/ Tyres, Wheels and Tyres, Wheels and Tyres Guide.
1.8l 118 kW 2.0l 110 kW petrol engine	Standard tyres	205/55 R 16 91V	$6^1/_2$ J x 16 ⇒ page 516	42	Yes	
	Modification	215/55 R 16 93V	$6^1/_2$ J x 16 ⇒ page 516	42	No	
		205/55 R 16 91V	7 J x 16 ⇒ page 517	45	No	
		215/55 R 16 93V	7 J x 16 ⇒ page 517	45	No	
		235/45 R 17 94V	$7^1/_2$ J x 17 ⇒ page 519	47	No	
		235/40 R 18 95Y* ⇒ page 501	8 J x 18 ⇒ page 522	44	No	
	Winter tyres	205/55 R 16 91H/V	$6^1/_2$ J x 16 ⇒ page 516	42	Yes	
		205/50 R 17 93H/V	6 J x 17 ⇒ page 519	45	Yes	

Protected by copyright. Copyright for private or commercial purposes, in part or in whole is not permitted unless authorised by Volkswagen AG. Volkswagen AG does not guarantee or accept any liability with respect to the correctness of information in this document. Copyright by Volkswagen AG.

satelettronica

Model engine output	Tyres	Tyre size	Wheel rim	Off-set in mm	Snow chains	Remarks
2.0l 100 kW TDI diesel engine with automatic/direct shift gearbox	Standard tyres	205/55 R 16 91H	6 1/2 J x 16 ⇒ page 516	42	Yes	
2.0l 103 kW TDI diesel engine 4MOTION	Modification	215/55 R 16 93H/V	6 1/2 J x 16 ⇒ page 516	42	No	
2.0l 103 kW TDI diesel engine with automatic/direct shift gearbox and front-wheel drive		205/55 R 16 91H/V	7 J x 16 ⇒ page 517	45	No	
		215/55 R 16 93H/V	7 J x 16 ⇒ page 517	45	No	
		235/45 R 17 94H/V	7 1/2 J x 17 ⇒ page 519	47	No	
		235/40 R 18 95Y* ⇒ page 501	8 J x 18 ⇒ page 522	44	No	
	Winter tyres	205/55 R 16 91H/V	6 1/2 J x 16 ⇒ page 516	42	Yes	
		205/50 R 17 93H/V	6 J x 17 ⇒ page 519	45	Yes	
2.0l 100 kW TDI diesel engine with manual gearbox	Standard tyres	205/55 R 16 91V	6 1/2 J x 16 ⇒ page 516	42	Yes	
2.0l 103 kW TDI diesel engine with manual gearbox and front-wheel drive	Modification	215/55 R 16 93V	6 1/2 J x 16 ⇒ page 516	42	No	
2.0l 120 kW TDI 2.0l 125 kW TDI diesel engines		205/55 R 16 91V	7 J x 16 ⇒ page 517	45	No	
		215/55 R 16 93V	7 J x 16 ⇒ page 517	45	No	
		235/45 R 17 94V	7 1/2 J x 17 ⇒ page 519	47	No	

Protected by copyright. Copying for private or commercial purposes, in any form or by any means, is not permitted unless authorised by Volkswagen AG. Volkswagen AG does not guarantee or accept any liability with respect to the correctness of information in this document. Copyright by Volkswagen AG.

satelettronica

Model engine output	Tyres	Tyre size	Wheel rim	Off-set in mm	Snow chains	Remarks
		235/40 R 18 95Y* ⇒ page 501	8 J x 18 ⇒ page 522	44	No	
	Winter tyres	205/55 R 16 91H/V	6 1/2 J x 16 ⇒ page 516	42	Yes	
		205/50 R 17 93H/V	6 J x 17 ⇒ page 519	45	Yes	
2.0l 147 kW petrol engine	Standard tyres	205/55 R 16 91W	6 1/2 J x 16 ⇒ page 516	42	Yes	
	Modification	215/55 R 16 93W	6 1/2 J x 16 ⇒ page 516	42	No	
		215/55 R 16 93W	7 J x 16 ⇒ page 517	45	No	
		235/45 R 17 94W	7 1/2 J x 17 ⇒ page 519	47	No	
		235/40 R 18 95Y* ⇒ page 501	8 J x 18 ⇒ page 522	44	No	
	Winter tyres	205/55 R 16 91H/V	6 1/2 J x 16 ⇒ page 516	42	Yes	
		205/50 R 17 93H/V	6 J x 17 ⇒ page 519	45	Yes	
3.2l 184 kW petrol engine	Standard tyres	235/45 R 17 94W	7 1/2 J x 17 ⇒ page 519	47	No	
	Modification	235/40 R 18 95Y* ⇒ page 501	8 J x 18 ⇒ page 522	44	No	
	Winter tyres	205/50 R 17 93H/V	6 J x 17 ⇒ page 519	45	Yes	

Tyre inflation pressures are located on a sticker in the fuel tank flap or in ⇒ Maintenance ; Booklet ; Check tyres: condition, profile, inflation pressure, depth of tread .

Protected by copyright. Copying for private or commercial purposes, in part or in whole, is not permitted unless authorised by Volkswagen AG. Volkswagen AG does not guarantee or accept any liability with respect to the correctness of information in this document. Copyright by Volkswagen AG.

satelettronica

52.3 Passat saloon, type 3C model year 2009

Caution

*Observe wheel and tyre combinations for vehicles as of type approval number: e1*2001/116*0307*19* ⇒ page 509 .

Appendix for certificate statement 8106807121

The certificate statement can be found on the Volkswagen ServiceNet under Accessories/Tyres, Wheels and Tyres, Wheels and Tyres Guide.

Type Approval No.: e1*2001/116*0307*15 to e1*2001/116*0307*18

Overview

Model engine output	Tyres	Tyre size	Wheel rim	Off-set in mm	Snow chains	Remarks
1.6l 75 kW; 1.6l 85 kW 1.4l 90 kW petrol engines;	Standard tyres	205/55 R 16 91H	6 1/2 J x 16 ⇒ page 516	42	Yes	
1.9l 77 kW TDI; 2.0l 81 kW TDI; 2.0l 100 kW TDI 2.0l 103 kW TDI diesel engines	Modification	215/55 R 16 93H/V	6 1/2 J x 16 ⇒ page 516	42	No	General information on: ◆ Winter tyres ⇒ page 15 ◆ Snow chains ⇒ page 18
		205/55 R 16 91H/V	7 J x 16 ⇒ page 517	45	No	Tyre makes recommended by Volkswagen:
		215/55 R 16 93H/V	7 J x 16 ⇒ page 517	45	No	◆ Summer tyres ⇒ page 660 ◆ All-season tyres ⇒ page 674 ◆ Winter tyres ⇒ page 691
		235/45 R 17 94H/V	7 1/2 J x 17 ⇒ page 519	47	No	
		235/40 R 18 95Y* ⇒ page 505	8 J x 18 ⇒ page 522	44	No	◆ * 235/40 R 18 95Y tyres on 8 J x 18 rims with an offset of 44 are only possible if the specified conditions ⇒ page 522 are met!
	Winter tyres	205/55 R 16 91H/V	6 1/2 J x 16 ⇒ page 516	42	Yes	

Protected by copyright. Copyright by Volkswagen AG.
Volkswagen AG does not guarantee or accept any liability with respect to the correctness of information in this document. Copyright by Volkswagen AG. Protected by copyright. Any unauthorised use, in whole or in part, is prohibited without the express authorised by Volkswagen AG.
satelettronica

Model engine output	Tyres	Tyre size	Wheel rim	Off-set in mm	Snow chains	Remarks
		205/50 R 17 93H/V	6 J x 17 ⇒ page 519	45	Yes	♦ 235/40 R 18 95W tyres on 8 J x 18 rims with an offset of 44 may be used instead of 235/40 R 18 95Y tyres on 8 J x 18 rims with an offset of 44. Observe authorisation by Kraftfahrt-Bundesamtes (German road traffic authority) "Authorisation of 95W tyres for Passat". This is located on the Volkswagen ServiceNet under Accessories/ Tyres, Wheels and Tyres, Wheels and Tyres Guide.
2.0l 105 kW TDI diesel engine	Standard tyres	205/55 R 16 91H	$6^1/_2$ J x 16 ⇒ page 516	42	Yes	
	Modification	205/55 R 16 91H/V	7 J x 16 ⇒ page 517	45	No	
		205/50 R 17 93H/V	6 J x 17 ⇒ page 519	45	Yes	
		235/45 R 17 94H/V	$7^1/_2$ J x 17 ⇒ page 519	47	No	
		235/40 R 18 95Y* ⇒ page 505	8 J x 18 ⇒ page 522	44	No	
	Winter tyres	205/55 R 16 91H/V	$6^1/_2$ J x 16 ⇒ page 516	42	Yes	
		205/50 R 17 93H/V	6 J x 17 ⇒ page 519	45	Yes	
1.4l 110 kW EcoFuel	Standard tyres	205/55 R 16 91V	$6^1/_2$ J x 16 ⇒ page 516	42	Yes	

Protected by copyright. Copying for private or commercial purposes, in part or in whole, is not permitted unless authorised by Volkswagen AG. Volkswagen AG does not guarantee or accept any liability with respect to the correctness of information in this document. Copyright by Volkswagen AG.

satelettronica

Model engine output	Tyres	Tyre size	Wheel rim	Off-set in mm	Snow chains	Remarks
	Modification	205/55 R 16 91V	7 J x 16 ⇒ page 517	45	No	
		205/50 R 17 93V	6 J x 17 ⇒ page 519	45	Yes	
		235/45 R 17 94V	7 1/2 J x 17 ⇒ page 519	47	No	
	Winter tyres	205/55 R 16 91H/V	6 1/2 J x 16 ⇒ page 516	42	Yes	
		205/50 R 17 93H/V	6 J x 17 ⇒ page 519	45	Yes	
1.8l 118 kW 2.0l 110 kW petrol engine	Standard tyres	205/55 R 16 91V	6 1/2 J x 16 ⇒ page 516	42	Yes	
2.0l 120 kW TDI 2.0l 125 kW TDI diesel engines	Modification	215/55 R 16 93V	6 1/2 J x 16 ⇒ page 516	42	No	
		205/55 R 16 91V	7 J x 16 ⇒ page 517	45	No	
		215/55 R 16 93V	7 J x 16 ⇒ page 517	45	No	
		235/45 R 17 94V	7 1/2 J x 17 ⇒ page 519	47	No	
		235/40 R 18 95Y* ⇒ page 505	8 J x 18 ⇒ page 522	44	No	
	Winter tyres	205/55 R 16 91H/V	6 1/2 J x 16 ⇒ page 516	42	Yes	
		205/50 R 17 93H/V	6 J x 17 ⇒ page 519	45	Yes	
2.0l 147 kW petrol engine	Standard tyres	205/55 R 16 91V	6 1/2 J x 16 ⇒ page 516	42	Yes	

Protected by copyright. Copying for private or commercial purposes, in part or in whole, is not permitted unless authorised by Volkswagen AG. Volkswagen AG does not guarantee or accept any liability with respect to the correctness of information in this document. Copyright by Volkswagen AG.

satelettronica

Model engine output	Tyres	Tyre size	Wheel rim	Off-set in mm	Snow chains	Remarks
	Modification	215/55 R 16 93W	6 1/2 J x 16 ⇒ page 516	42	No	
		205/55 R 16 91V	7 J x 16 ⇒ page 517	45	No	
		215/55 R 16 93W	7 J x 16 ⇒ page 517	45	No	
		235/45 R 17 94W	7 1/2 J x 17 ⇒ page 519	47	No	
		235/40 R 18 95Y* ⇒ page 505	8 J x 18 ⇒ page 522	44	No	
	Winter tyres	205/55 R 16 91H/V	6 1/2 J x 16 ⇒ page 516	42	Yes	
		205/50 R 17 93H/V	6 J x 17 ⇒ page 519	45	Yes	
3.2l 184 kW petrol engine	Standard tyres	235/45 R 17 94W	7 1/2 J x 17 ⇒ page 519	47	No	
	Modification	235/40 R 18 95Y* ⇒ page 505	8 J x 18 ⇒ page 522	44	No	
	Winter tyres	205/50 R 17 93H/V	6 J x 17 ⇒ page 519	45	Yes	

Tyre inflation pressures are located on a sticker in the fuel tank flap or in ⇒ Maintenance ; Booklet ; Check tyres: condition, profile, inflation pressure, depth of tread .

Appendix for certificate statement 8106807121

The certificate statement can be found on the Volkswagen ServiceNet under Accessories/Tyres, Wheels and Tyres, Wheels and Tyres Guide.

Protected by copyright. Copyright for private or commercial purposes, in whole, is not permitted unless authorised by Volkswagen AG. Volkswagen AG does not guarantee or accept any liability with respect to the correctness of information in this document. Copyright by Volkswagen AG.

satelettronica

Type Approval No.: e1*2001/116*0307*19

Overview

Model engine output	Tyres	Tyre size	Wheel rim	Off-set in mm	Snow chains	Remarks
1.6l 75 kW; 1.4l 90 kW petrol engines;	Standard tyres	205/55 R 16 91H	6 1/2 J x 16 ⇒ page 516	42	Yes	
2.0l 81 kW TDI; 2.0l 100 kW TDI 2.0l 103 kW TDI diesel engines	Modification	215/55 R 16 93H/V	6 1/2 J x 16 ⇒ page 516	42	No	General information on: ◆ Winter tyres ⇒ page 15 ◆ Snow chains ⇒ page 18
		205/55 R 16 91H/V	7 J x 16 ⇒ page 517	45	No	Tyre makes recommended by Volkswagen:
		215/55 R 16 93H/V	7 J x 16 ⇒ page 517	45	No	◆ Summer tyres ⇒ page 660 ◆ All-season tyres ⇒ page 674 ◆ Winter tyres ⇒ page 691
		235/45 R 17 94H/V	7 1/2 J x 17 ⇒ page 519	47	No	
		235/40 R 18 95Y* ⇒ page 509	8 J x 18 ⇒ page 522	44	No	◆ * 235/40 R 18 95Y tyres on 8 J x 18 rims with an offset of 44 are only possible if the specified conditions ⇒ page 522 are met!
	Winter tyres	205/55 R 16 91H/V	6 1/2 J x 16 ⇒ page 516	42	Yes	

Protected by copyright. Copying for private or commercial purposes, in part or in whole, is not permitted unless authorised by Volkswagen AG. Volkswagen AG does not guarantee or accept any liability with respect to the correctness of information in this document. Copyright by Volkswagen AG.

satelettronica

Model engine output	Tyres	Tyre size	Wheel rim	Off-set in mm	Snow chains	Remarks
		205/50 R 17 93H/V	6 J x 17 ⇒ page 519	45	Yes	♦ 235/40 R 18 95W tyres on 8 J x 18 rims with an offset of 44 may be used instead of 235/40 R 18 95Y tyres on 8 J x 18 rims with an offset of 44. Observe authorisation by Kraftfahrt-Bundesamtes (German road traffic authority) "Authorisation of 95W tyres for Passat". This is located on the Volkswagen ServiceNet under Accessories/ Tyres, Wheels and Tyres, Wheels and Tyres Guide.
2.0l 105 kW TDI diesel engine	Standard tyres	205/55 R 16 91H	6 1/2 J x 16 ⇒ page 516	42	Yes	
	Modification	205/55 R 16 91H/V	7 J x 16 ⇒ page 517	45	No	
		205/50 R 17 93H/V	6 J x 17 ⇒ page 519	45	Yes	
		235/45 R 17 94H/V	7 1/2 J x 17 ⇒ page 519	47	No	
		235/40 R 18 95Y* ⇒ page 509	8 J x 18 ⇒ page 522	44	No	
	Winter tyres	205/55 R 16 91H/V	6 1/2 J x 16 ⇒ page 516	42	Yes	
		205/50 R 17 93H/V	6 J x 17 ⇒ page 519	45	Yes	
1.4l 110 kW EcoFuel	Standard tyres	205/55 R 16 91H	6 1/2 J x 16 ⇒ page 516	42	Yes	

Protected by copyright. Copying for private or commercial purposes, in part or in whole, is not permitted unless authorised by Volkswagen AG. Volkswagen AG does not make any representations or warranties or accept any liability with respect to the correctness of information in this document. Copyright by Volkswagen AG.

satelettronica

Model engine output	Tyres	Tyre size	Wheel rim	Off-set in mm	Snow chains	Remarks
	Modification	205/55 R 16 91H	7 J x 16 ⇒ page 517	45	No	
		205/50 R 17 93H	6 J x 17 ⇒ page 519	45	Yes	
		235/45 R 17 94H/V	$7^1/_2$ J x 17 ⇒ page 519	47	No	
	Winter tyres	205/55 R 16 91H/V	$6^1/_2$ J x 16 ⇒ page 516	42	Yes	
		205/50 R 17 93H/V	6 J x 17 ⇒ page 519	45	Yes	
1.8l 118 kW 2.0l 110 kW petrol engine	Standard tyres	205/55 R 16 91V	$6^1/_2$ J x 16 ⇒ page 516	42	Yes	
2.0l 125 kW TDI diesel engines	Modification	215/55 R 16 93V	$6^1/_2$ J x 16 ⇒ page 516	42	No	
		205/55 R 16 91V	7 J x 16 ⇒ page 517	45	No	
		215/55 R 16 93V	7 J x 16 ⇒ page 517	45	No	
		235/45 R 17 94V	$7^1/_2$ J x 17 ⇒ page 519	47	No	
		235/40 R 18 95Y* ⇒ page 509	8 J x 18 ⇒ page 522	44	No	
	Winter tyres	205/55 R 16 91H/V	$6^1/_2$ J x 16 ⇒ page 516	42	Yes	
		205/50 R 17 93H/V	6 J x 17 ⇒ page 519	45	Yes	
2.0l 147 kW petrol engine	Standard tyres	205/55 R 16 91V	$6^1/_2$ J x 16 ⇒ page 516	42	Yes	

Protected by copyright. Copying for private or commercial purposes, in part or in whole, is not permitted unless authorised by Volkswagen AG. Volkswagen AG does not guarantee or accept any liability with respect to the correctness of information in this guide. Copyright by Volkswagen AG.

satelettronica

Model engine output	Tyres	Tyre size	Wheel rim	Off-set in mm	Snow chains	Remarks
	Modification	215/55 R 16 93W	6 1/2 J x 16 ⇒ page 516	42	No	
		205/55 R 16 91V	7 J x 16 ⇒ page 517	45	No	
		215/55 R 16 93W	7 J x 16 ⇒ page 517	45	No	
		235/45 R 17 94W	7 1/2 J x 17 ⇒ page 519	47	No	
		235/40 R 18 95Y* ⇒ page 509	8 J x 18 ⇒ page 522	44	No	
	Winter tyres	205/55 R 16 91H/V	6 1/2 J x 16 ⇒ page 516	42	Yes	
		205/50 R 17 93H/V	6 J x 17 ⇒ page 519	45	Yes	
3.2l 184 kW petrol engine	Standard tyres	235/45 R 17 94W	7 1/2 J x 17 ⇒ page 519	47	No	
	Modification	235/40 R 18 95Y* ⇒ page 509	8 J x 18 ⇒ page 522	44	No	
	Winter tyres	205/50 R 17 93H/V	6 J x 17 ⇒ page 519	45	Yes	

Tyre inflation pressures are located on a sticker in the fuel tank flap or in ⇒ Maintenance ; Booklet ; Check tyres: condition, profile, inflation pressure, depth of tread .

52.4 Passat saloon, type 3C model year 2010 to model year 2011

Appendix for certificate statement 8106807121

The certificate statement can be found on the Volkswagen ServiceNet under Accessories/Tyres, Wheels and Tyres, Wheels and Tyres Guide.

Protected by copyright. Copying for private or commercial purposes, in part or in whole, is not permitted unless authorised by Volkswagen AG. Volkswagen AG does not guarantee or accept any liability with respect to the correctness of information in this document. Copyright by Volkswagen AG.

satelettronica

Type Approval No.: e1*2001/116*0307*20 to e1*2001/116*0307*23

Overview

Model engine output	Tyres	Tyre size	Wheel rim	Off-set in mm	Snow chains	Remarks
1.6l 75 kW; 1.4l 90 kW petrol engines;	Standard tyres	205/55 R 16 91H	6 1/2 J x 16 ⇒ page 516	42	Yes	
2.0l 81 kW TDI; 2.0l 100 kW TDI 2.0l 103 kW TDI diesel engines	Modification	215/55 R 16 93H/V	6 1/2 J x 16 ⇒ page 516	42	No	General information on: ◆ Winter tyres ⇒ page 15 ◆ Snow chains ⇒ page 18
		205/55 R 16 91H/V	7 J x 16 ⇒ page 517	45	No	Tyre makes recommended by Volkswagen:
		215/55 R 16 93H/V	7 J x 16 ⇒ page 517	45	No	◆ Summer tyres ⇒ page 660 ◆ All-season tyres ⇒ page 674 ◆ Winter tyres ⇒ page 691
		235/45 R 17 94H/V	7 1/2 J x 17 ⇒ page 519	47	No	
		235/40 R 18 95W* ⇒ page 513	8 J x 18 ⇒ page 522	44	No	* 235/40 R 18 95W tyres on 8 J x 18 rims with an offset of 44 rims are only possible if the specified conditions ⇒ page 522 are met!
	Winter tyres	205/55 R 16 91H/V	6 1/2 J x 16 ⇒ page 516	42	Yes	
		205/50 R 17 93H/V	6 J x 17 ⇒ page 519	45	Yes	
2.0l 105 kW TDI diesel engine	Standard tyres	205/55 R 16 91H	6 1/2 J x 16 ⇒ page 516	42	Yes	
	Modification	205/55 R 16 91H/V	7 J x 16 ⇒ page 517	45	No	

Protected by copyright. Copying for private or commercial purposes, in part or in whole, is not permitted unless authorised by Volkswagen AG. Volkswagen AG does not guarantee or accept any liability with respect to the correctness of information in this document. Copyright by Volkswagen AG.

satelettronica

Model engine output	Tyres	Tyre size	Wheel rim	Off-set in mm	Snow chains	Remarks
		205/50 R 17 93H/V	6 J x 17 ⇒ page 519	45	Yes	
		235/45 R 17 94H/V	7 1/2 J x 17 ⇒ page 519	47	No	
		235/40 R 18 95W* ⇒ page 514	8 J x 18 ⇒ page 522	44	No	* 235/40 R 18 95W tyres on 8 J x 18 rims with an offset of 44 rims are only possible if the specified conditions ⇒ page 522 are met!
	Winter tyres	205/55 R 16 91H/V	6 1/2 J x 16 ⇒ page 516	42	Yes	
		205/50 R 17 93H/V	6 J x 17 ⇒ page 519	45	Yes	
1.4l 110 kW EcoFuel	Standard tyres	205/55 R 16 91H	6 1/2 J x 16 ⇒ page 516	42	Yes	
	Modification	205/55 R 16 91H	7 J x 16 ⇒ page 517	45	No	
		205/50 R 17 93H	6 J x 17 ⇒ page 519	45	Yes	
		235/45 R 17 94H/V	7 1/2 J x 17 ⇒ page 519	47	No	
	Winter tyres	205/55 R 16 91H/V	6 1/2 J x 16 ⇒ page 516	42	Yes	
		205/50 R 17 93H/V	6 J x 17 ⇒ page 519	45	Yes	
1.8l 118 kW 2.0l 110 kW petrol engine	Standard tyres	205/55 R 16 91V	6 1/2 J x 16 ⇒ page 516	42	Yes	
2.0l 125 kW TDI diesel engines	Modification	215/55 R 16 93V	6 1/2 J x 16 ⇒ page 516	42	No	

Protected by copyright. Copying for private or commercial purposes, part or in whole, is not permitted unless authorised by Volkswagen AG. Volkswagen AG does not guarantee or accept any liability with respect to the correctness of information in this document. Copyright by Volkswagen AG.
satelettronica

Model engine output	Tyres	Tyre size	Wheel rim	Off-set in mm	Snow chains	Remarks
		205/55 R 16 91V	7 J x 16 ⇒ page 517	45	No	
		215/55 R 16 93V	7 J x 16 ⇒ page 517	45	No	
		235/45 R 17 94V	7 1/2 J x 17 ⇒ page 519	47	No	
		235/40 R 18 95W* ⇒ page 515	8 J x 18 ⇒ page 522	44	No	* 235/40 R 18 95W tyres on 8 J x 18 rims with an offset of 44 rims are only possible if the specified conditions ⇒ page 522 are met!
	Winter tyres	205/55 R 16 91H/V	6 1/2 J x 16 ⇒ page 516	42	Yes	
		205/50 R 17 93H/V	6 J x 17 ⇒ page 519	45	Yes	
2.0l 147 kW petrol engine	Standard tyres	205/55 R 16 91V	6 1/2 J x 16 ⇒ page 516	42	Yes	
	Modification	215/55 R 16 93W	6 1/2 J x 16 ⇒ page 516	42	No	
		205/55 R 16 91V	7 J x 16 ⇒ page 517	45	No	
		215/55 R 16 93W	7 J x 16 ⇒ page 517	45	No	
		235/45 R 17 94W	7 1/2 J x 17 ⇒ page 519	47	No	
		235/40 R 18 95W* ⇒ page 515	8 J x 18 ⇒ page 522	44	No	* 235/40 R 18 95W tyres on 8 J x 18 rims with an offset of 44 rims are only possible if the specified conditions ⇒ page 522 are met!

Protected by copyright. Copying for private or commercial purposes, in part or in whole, is not permitted unless authorised by Volkswagen AG. Volkswagen AG does not guarantee or accept any liability with respect to the correctness of information in this document. Copyright by Volkswagen AG.

satelettronica

Model engine output	Tyres	Tyre size	Wheel rim	Off-set in mm	Snow chains	Remarks
	Winter tyres	205/55 R 16 91H/V	$6^1/_2$ J x 16 ⇒ page 516	42	Yes	
		205/50 R 17 93H/V	6 J x 17 ⇒ page 519	45	Yes	
3.2l 184 kW petrol engine	Standard tyres	235/45 R 17 94W	$7^1/_2$ J x 17 ⇒ page 519	47	No	
	Modification	235/40 R 18 95W* ⇒ page 516	8 J x 18 ⇒ page 522	44	No	* 235/40 R 18 95W tyres on 8 J x 18 rims with an offset of 44 rims are only possi-ble if the specified con-ditions ⇒ page 522 are met!
	Winter tyres	205/50 R 17 93H/V	6 J x 17 ⇒ page 519	45	Yes	

Tyre inflation pressures are located on a sticker in the fuel tank flap or in ⇒ Maintenance ; Booklet ; Check tyres: condition, profile, inflation pressure, depth of tread .

52.5 Wheel allocation for Passat saloon, type 3C model year 2006 to model year 2011

Explanation of information on wheels ⇒ page 59

Torque settings for wheel bolts ⇒ Running gear, axles, steering; Rep. gr. 44 ; Torque settings for fitting wheels

Pitch circle diameter:	112 mm
Number of wheel bolt holes:	5

52.5.1 $6^1/_2$ J x 16

Caution

Observe the allocation of wheels and tyres to the respective engines, which are listed in the overview table ⇒ page 494 .

Volkswagen AG. Volkswagen AG does not guarantee or accept any liability with respect to the correctness of information in this document. Copyright by Volkswagen AG. Copyright by Volkswagen AG. Reproduction, in whole or in part, for commercial purposes, in part or in whole, is not permitted unless authorised by Volkswagen AG.
satelettronica

Protected by copyright. Copying for private or commercial purposes, in part or in whole, is not permitted unless authorised by Volkswagen AG. Volkswagen AG does not guarantee or accept any liability with respect to the correctness of information in this document. Copyright by Volkswagen AG.

satelettronica

3C0 601 027 H - Wheel and tyre combination ⇒ page 494

Size:	6 1/2 J x 16
Wheel offset in mm:	42
Wheel load in kg:	650

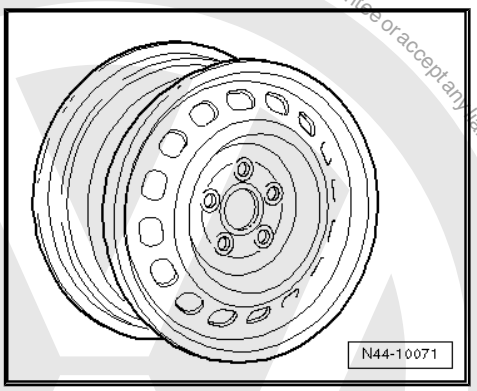

3C0 601 027 AA - Wheel and tyre combination ⇒ page 494

Size:	6 1/2 J x 16
Wheel offset in mm:	42
Wheel load in kg:	650

Winter wheel

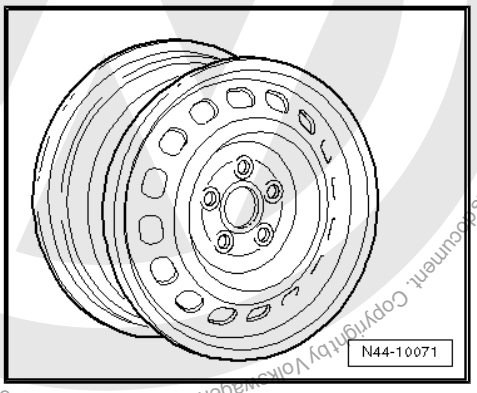

3C0 601 025 F - Wheel and tyre combination ⇒ page 495

Size:	6 1/2 J x 16
Wheel offset in mm:	42
Wheel load in kg:	650

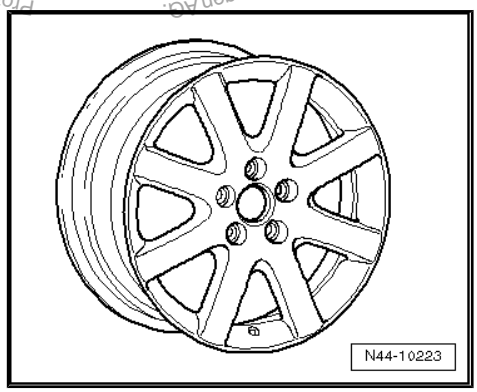

52.5.2 7 J x 16

Caution

Observe the allocation of wheels and tyres to the respective engines, which are listed in the overview table *⇒ page 494* *.*

3C0 601 025, 3C0 601 025 AD - Wheel and tyre combination ⇒ page 495

Size:	7 J x 16
Wheel offset in mm:	45
Wheel load in kg:	650

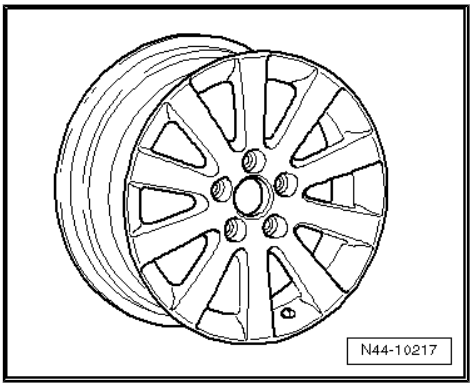

3C0 601 025 A - Wheel and tyre combination ⇒ page 495

Size:	7 J x 16
Wheel offset in mm:	45
Wheel load in kg:	650

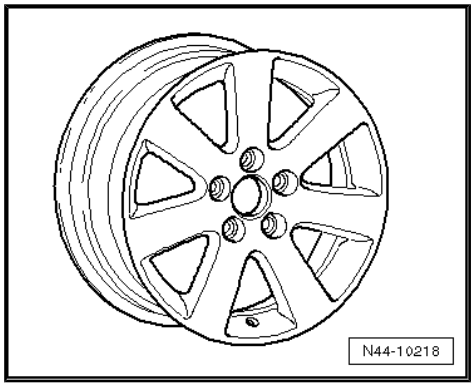

3C0 601 025 AE - Wheel and tyre combination ⇒ page 495

Size:	7 J x 16
Wheel offset in mm:	45
Wheel load in kg:	650

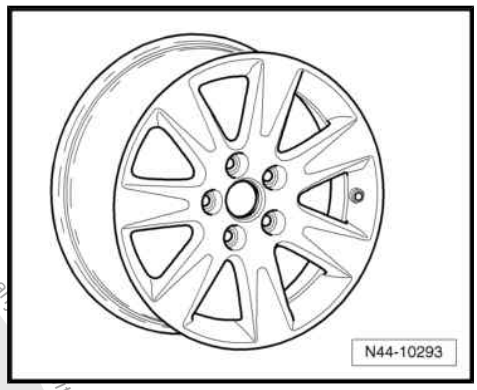

3C0 601 025 AF - Wheel and tyre combination ⇒ page 495

Size:	7 J x 16
Wheel offset in mm:	45
Wheel load in kg:	650

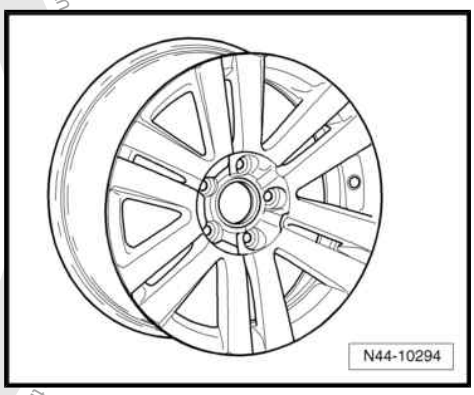

3C0 601 025 B - Wheel and tyre combination ⇒ page 495

Size:	7 J x 16
Wheel offset in mm:	45
Wheel load in kg:	650

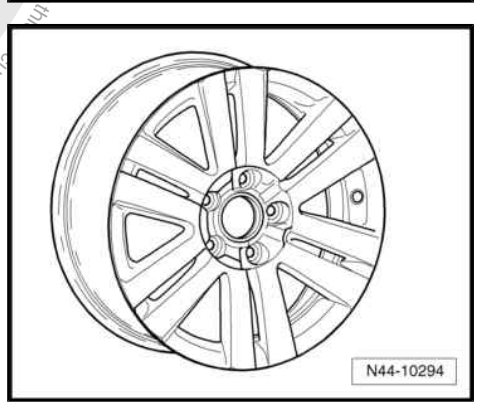

Protected by copyright. Copying for private or commercial purposes, in any form or by any means, is not permitted unless authorised by Volkswagen AG. Volkswagen AG does not guarantee or accept any liability with respect to the correctness of information in this document. Copyright by Volkswagen AG.

satelettronica

3C0 601 025 C - Wheel and tyre combination ⇒ page 495

Size:	7 J x 16 EH2 ⇒ page 59
Wheel offset in mm:	45
Wheel load in kg:	650

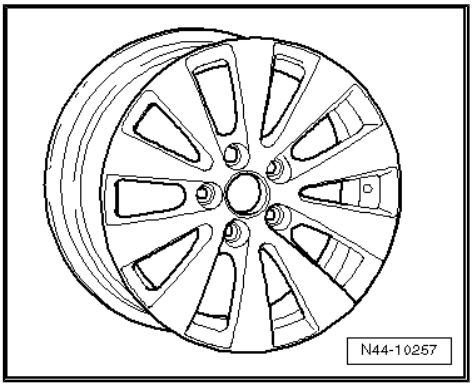

52.5.3 6 J x 17

Caution

Observe the allocation of wheels and tyres to the respective engines, which are listed in the overview table *⇒ page 494* *.*

Winter wheel

3C0 601 025 M - Wheel and tyre combination ⇒ page 495

Size:	6 J x 17
Wheel offset in mm:	45
Wheel load in kg:	650

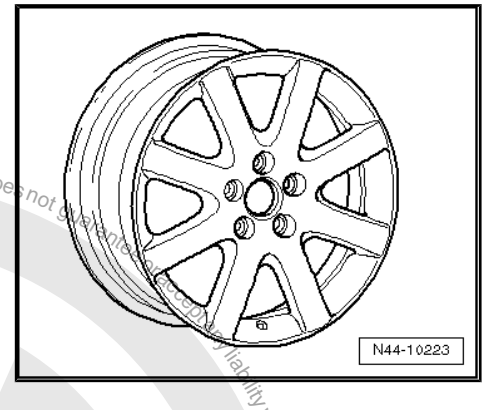

52.5.4 7$^1/_2$ J x 17

Caution

Observe the allocation of wheels and tyres to the respective engines, which are listed in the overview table *⇒ page 494* *.*

3C0 601 025 AQ - Wheel and tyre combination ⇒ page 495

Size:	7$^1/_2$ J x 17
Wheel offset in mm:	47
Wheel load in kg:	650

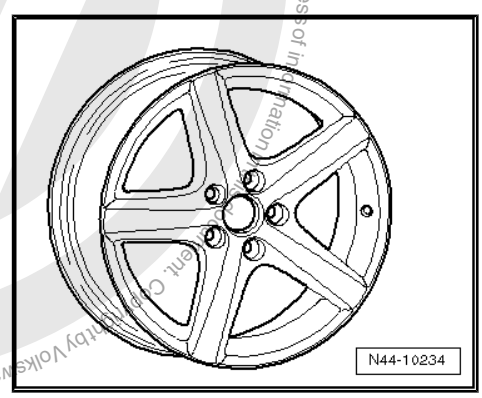

Protected by copyright. Copying for private or commercial purposes, in part or in whole, is not permitted unless authorised by Volkswagen AG. Volkswagen AG does not guarantee or accept any liability with respect to the correctness of information contained in this document. Copyright by Volkswagen AG.
satelettronica

3C0 601 025 BB - Wheel and tyre combination ⇒ page 495

Size:	$7^1/_2$ J x 17
Wheel offset in mm:	47
Wheel load in kg:	650

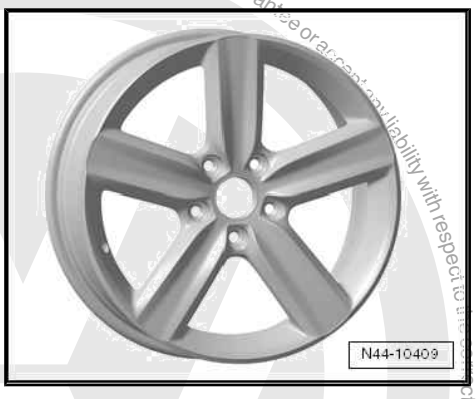

3C0 601 025 D - Wheel and tyre combination ⇒ page 495

Size:	$7^1/_2$ J x 17
Wheel offset in mm:	47
Wheel load in kg:	650

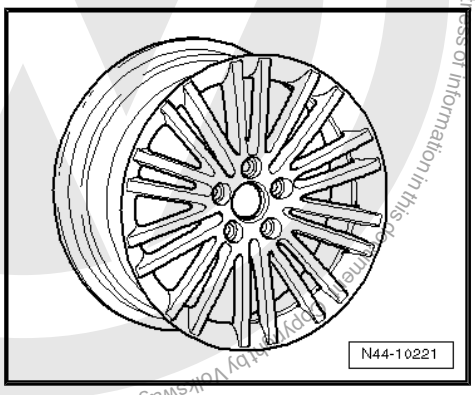

3C0 601 025 E - Wheel and tyre combination ⇒ page 495

Size:	$7^1/_2$ J x 17
Wheel offset in mm:	47
Wheel load in kg:	650

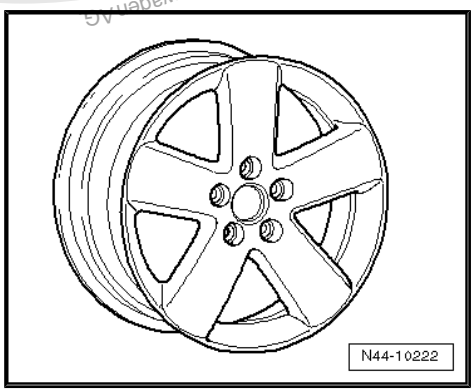

3C0 601 025 G - Wheel and tyre combination ⇒ page 495

Size:	$7^1/_2$ J x 17
Wheel offset in mm:	47
Wheel load in kg:	650

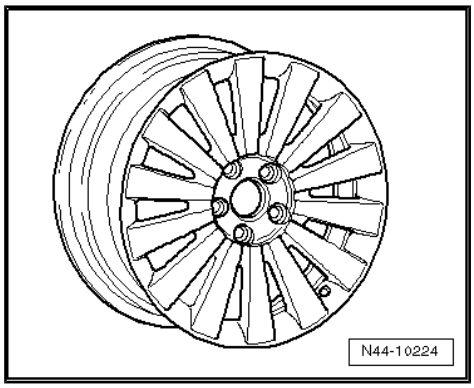

Protected by copyright. Copying for private or commercial purposes, in part or in whole, is not permitted unless authorised by Volkswagen AG. Volkswagen AG does not guarantee or accept any liability with respect to the correctness of information in this document.
satelettronica

3C0 601 025 J - Wheel and tyre combination ⇒ page 495

Size:	$7^1/_2$ J x 17
Wheel offset in mm:	47
Wheel load in kg:	650

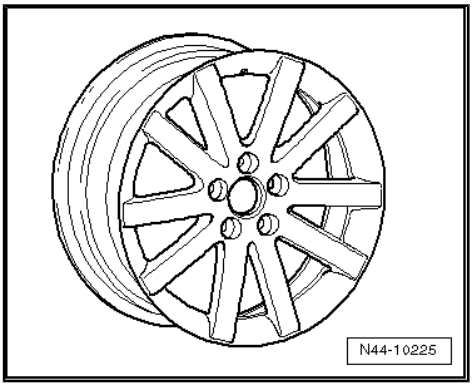

3C0 601 025 K - Wheel and tyre combination ⇒ page 495

Size:	$7^1/_2$ J x 17
Wheel offset in mm:	47
Wheel load in kg:	650

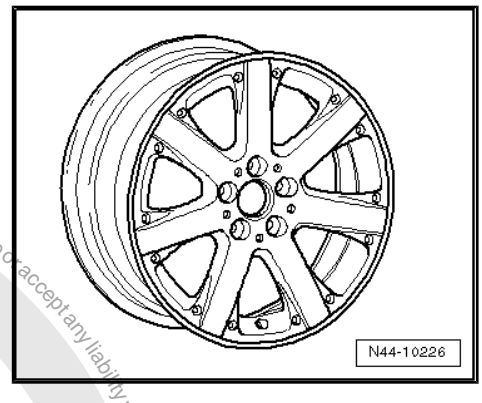

3C0 601 025 R - Wheel and tyre combination ⇒ page 495

Size:	$7^1/_2$ J x 17
Wheel offset in mm:	47
Wheel load in kg:	650

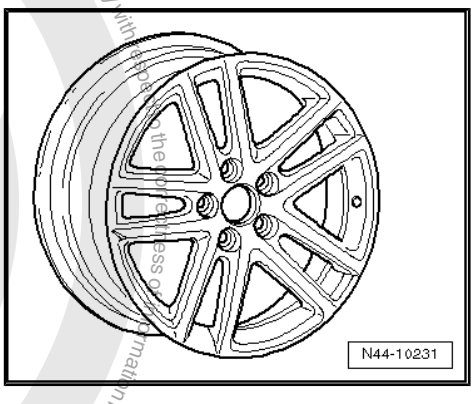

3C0 601 025 S - Wheel and tyre combination ⇒ page 495

Size:	$7^1/_2$ J x 17
Wheel offset in mm:	47
Wheel load in kg:	650

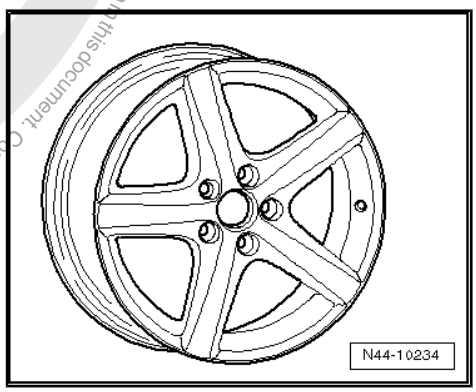

Protected by copyright. Copying for private or commercial purposes, in part or in whole, is not permitted unless authorised by Volkswagen AG. Volkswagen AG does not guarantee or accept any liability with respect to the correctness of information in this document. Copyright by Volkswagen AG.
satelettronica

3C0 601 025 AJ - Wheel and tyre combination ⇒ page 495

Size:	$7^1/_2$ J x 17
Wheel offset in mm:	47
Wheel load in kg:	650

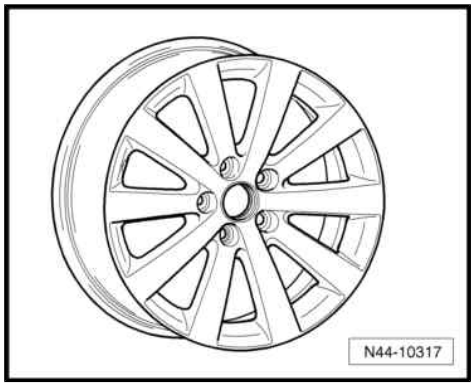

52.5.5 8 J x 18

Caution

Observe the allocation of wheels and tyres to the respective engines, which are listed in the overview table ⇒ page 494 .

Caution

8 J x 18 wheels can only be fitted under the following conditions:

- *The vehicle must be fitted with the sport suspension for 18″ wheels. The respective PR number and alignment specifications for the suspension can be found here: ⇒ Running gear, axles, steering; Rep. gr. 44 ; Wheel alignment; Specifications for wheel alignment .*
- *The camber on the rear axle must be -1°45'.*
- *Also, wider wheel arches ⇒ page 4 must be installed ⇒ Electronic Parts Catalogue "ETKA" .*

3C0 601 025 AA - Wheel and tyre combination ⇒ page 495

Size:	8 J x 18
Wheel offset in mm:	44
Wheel load in kg:	650

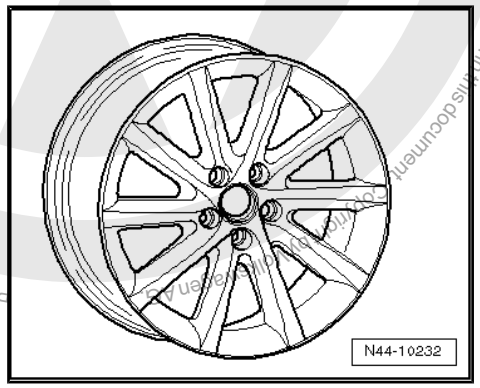

Protected by copyright. Copying for private or commercial purposes, in part or in whole, is not permitted unless authorised by Volkswagen AG. Volkswagen AG does not guarantee or accept any liability with respect to the correctness of information in this document. Copyright by Volkswagen AG.
satelettronica

3C0 601 025 AB, 3C0 601 025 AP - Wheel and tyre combination ⇒ page 495

Size:	8 J x 18
Wheel offset in mm:	44
Wheel load in kg:	650

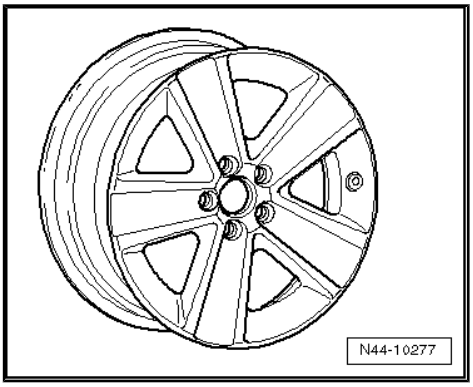

3C0 601 025 AC - Wheel and tyre combination ⇒ page 495

Size:	8 J x 18
Wheel offset in mm:	44
Wheel load in kg:	650

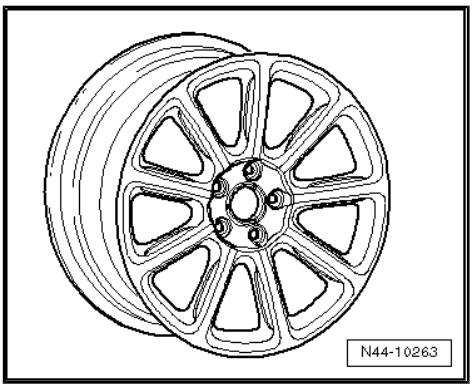

3C0 601 025 T, 3C0 601 025 AN - Wheel and tyre combination ⇒ page 495

Size:	8 J x 18
Wheel offset in mm:	44
Wheel load in kg:	650

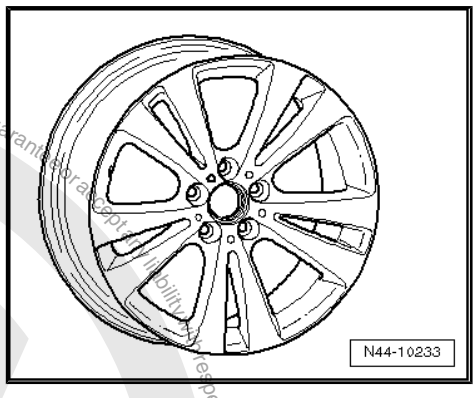

3C0 601 025 AG - Wheel and tyre combination ⇒ page 495

Size:	8 J x 18
Wheel offset in mm:	44
Wheel load in kg:	650

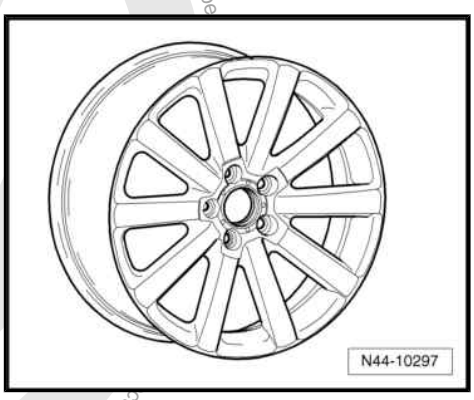

Protected by copyright. Copying for private or commercial purposes, in part or in whole, is not permitted unless authorised by Volkswagen AG. Volkswagen AG does not guarantee or accept any liability with respect to the correctness and completeness of this document. Copyright by Volkswagen AG.
satelettronica

3C0 601 025 BA - Wheel and tyre combination ⇒ page 495

Size:	8 J x 18
Wheel offset in mm:	44
Wheel load in kg:	650

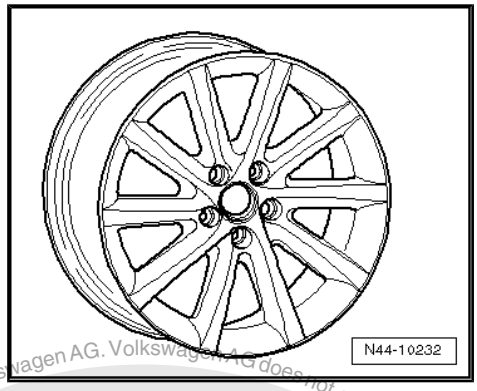

Protected by copyright. Copying for private or commercial purposes, in part or in whole, is not permitted unless authorised by Volkswagen AG. Volkswagen AG does not guarantee or accept any liability with respect to the correctness of information in this document. Copyright by Volkswagen AG.
satelettronica

53 Passat saloon BlueMotion from model year 2008

General

Volkswagen vehicles are built according to the latest findings in safety engineering. To keep it that way, we recommend the use of only genuine Volkswagen spare parts. You can recognise this by the VW Audi logo and by the part number. It has been established that these parts are reliable, safe and suitable.

Despite constant appraisal of the market, we cannot assess other products on these points, even when in isolated cases they have been passed by official inspectors or have been granted official approval. Therefore, we cannot, of course, assume any liability if these products are installed.

> ⚠ **WARNING**
>
> *The products from Volkswagen genuine parts and Votex genuine accessories may differ in fitting requirements, torque specifications and so on.*
>
> *Always follow the respective fitting and operating instructions.*

The wheel and tyre combinations or changes listed in the vehicle tables refer exclusively to Volkswagen Genuine wheels. Approval of wheel and tyre combinations or a change to wheels from the accessories trade is not possible with the certificate statement attached here.

> ⚠ **WARNING**
>
> *The fitting instructions and torque specifications for wheels from Votex genuine accessories may differ from those intended for wheels from Volkswagen genuine parts.*
>
> *Therefore, always observe the torque settings for the wheel bolts as well as the respective fitting and operating instructions.*

53.1 Passat saloon BlueMotion, type 3C model year 2008 to model year 2009

Appendix for certificate statement 8106807121

The certificate statement can be found on the Volkswagen ServiceNet under Accessories/Tyres, Wheels and Tyres, Wheels and Tyres Guide.

Type Approval No.: e1*2001/116*0307*13 to e1*2001/116*0307*19

Overview

Model engine output	Tyres	Tyre size	Wheel rim	Off-set in mm	Snow chains	Remarks
1.9l 77 kW TDI; diesel engine	Standard tyres	205/55 R 16 91H	$6^1/_2$ J x 16 ⇒ page 528	42	Yes	General information on: ◆ Winter tyres ⇒ page 15 ◆ Snow chains ⇒ page 18

Protected by copyright. Copying for private or commercial purposes, in part or in whole, is not permitted unless authorised by Volkswagen AG. Volkswagen AG does not guarantee or accept any liability with respect to the correctness of information in this document. Copyright by Volkswagen AG.
satelettronica

Model engine output	Tyres	Tyre size	Wheel rim	Off-set in mm	Snow chains	Remarks
	Modification	205/55 R 16 91H/V	7 J x 16 ⇒ page 529	45	No	Tyre makes recommended by Volkswagen:
	Winter tyres	205/55 R 16 91H/V	6 1/2 J x 16 ⇒ page 528	42	Yes	♦ Summer tyres ⇒ page 661 ♦ All-season tyres ⇒ page 674 ♦ Winter tyres ⇒ page 692
2.0l 81 kW TDI diesel engine	Standard tyres	205/55 R 16 91H	6 1/2 J x 16 ⇒ page 528	42	Yes	
	Modification	205/55 R 16 91H/V	7 J x 16 ⇒ page 529	45	No	
		205/50 R 17 93H/V	6 J x 17 ⇒ page 531	45	Yes	
		235/45 R 17 94H/V	7 1/2 J x 17 ⇒ page 531	47	No	
		235/40 R 18 95Y* ⇒ page 526	8 J x 18 ⇒ page 534	44	No	♦ * 235/40 R 18 95Y tyres on 8 J x 18 rims with an offset of 44 are only possible if the specified conditions ⇒ page 534 are met! ♦ 235/40 R 18 95W tyres on 8 J x 18 rims with an offset of 44 may be used instead of 235/40 R 18 95Y tyres on 8 J x 18 rims with an offset of 44. Observe authorisation by Kraftfahrt-Bundesamtes (German road traffic authority) “Authorisation of 95W tyres for Passat”. This is located on the Volkswagen ServiceNet under Accessories/ Tyres, Wheels and Tyres, Wheels and Tyres Guide.
	Winter tyres	205/55 R 16 91H/V	6 1/2 J x 16 ⇒ page 528	42	Yes	

Protected by copyright. Copying for private or commercial purposes, in part or in whole, is not permitted unless authorised by Volkswagen AG. Volkswagen AG does not guarantee or accept any liability with respect to the correctness of information in this document. Copyright by Volkswagen AG.

satelettronica

Model engine output	Tyres	Tyre size	Wheel rim	Off-set in mm	Snow chains	Remarks
		205/50 R 17 93H/V	6 J x 17 ⇒ page 531	45	Yes	

Tyre inflation pressures are located on a sticker in the fuel tank flap or in ⇒ Maintenance ; Booklet ; Check tyres: condition, profile, inflation pressure, depth of tread .

53.2 Passat saloon BlueMotion, type 3C model year 2010 to model year 2011

Appendix for certificate statement 8106807121

The certificate statement can be found on the Volkswagen ServiceNet under Accessories/Tyres, Wheels and Tyres, Wheels and Tyres Guide.

Type Approval No.: e1*2001/116*0307*20 to e1*2001/116*0307*23

Overview

Model engine output	Tyres	Tyre size	Wheel rim	Off-set in mm	Snow chains	Remarks
1.4l 90 kW petrol engine	Standard tyres	205/55 R 16 91H	$6^1/_2$ J x 16 ⇒ page 528	42	Yes	General information on: ◆ Winter tyres ⇒ page 15 ◆ Snow chains ⇒ page 18
1.6l 77 kW TDI; 2.0l 81 kW TDI; 2.0l 103 kW TDI diesel engine	Modification	205/55 R 16 91H/V	7 J x 16 ⇒ page 529	45	No	Tyre makes recommended by Volkswagen:

Protected by copyright. Copying for private or commercial purposes, in part or in whole, is not permitted unless authorised by Volkswagen AG. Volkswagen AG does not guarantee or accept any liability with respect to the correctness of information in this document. Copyright by Volkswagen AG.

satelettronica

Model engine output	Tyres	Tyre size	Wheel rim	Off-set in mm	Snow chains	Remarks
		205/50 R 17 93H/V	6 J x 17 ⇒ page 531	45	Yes	◆ Summer tyres ⇒ page 661 ◆ All-season tyres ⇒ page 674 ◆ Winter tyres ⇒ page 692
		235/45 R 17 94H/V	7 1/2 J x 17 ⇒ page 531	47	No	
		235/40 R 18 95W* ⇒ page 528	8 J x 18 ⇒ page 534	44	No	◆ * 235/40 R 18 95Y tyres on 8 J x 18 rims with an off-set of 44 are only possible if the specified conditions ⇒ page 534 are met!
	Winter tyres	205/55 R 16 91H/V	6 1/2 J x 16 ⇒ page 528	42	Yes	
		205/50 R 17 93H/V	6 J x 17 ⇒ page 531	45	Yes	

Tyre inflation pressures are located on a sticker in the fuel tank flap or in ⇒ Maintenance ; Booklet ; Check tyres: condition, profile, inflation pressure, depth of tread .

53.3 Wheel allocation for Passat saloon BlueMotion, type 3C model year 2008 to model year 2011

Explanation of information on wheels ⇒ page 59

Torque settings for wheel bolts ⇒ Running gear, axles, steering; Rep. gr. 44 ; Torque settings for fitting wheels

Pitch circle diameter:	112 mm
Number of wheel bolt holes:	5

53.3.1 6 1/2 J x 16

Caution

Observe the allocation of wheels and tyres to the respective engines, which are listed in the overview table ⇒ page 525 .

Protected by copyright. Copyright by Volkswagen AG. Volkswagen AG does not guarantee or accept any liability with respect to the correctness of information in this document. Copying for private or commercial purposes, in part or in whole, is not permitted unless authorised by Volkswagen AG.

satelettronica

3C0 601 027 H - Wheel and tyre combination ⇒ page 525

Size:	$6^1/_2$ J x 16
Wheel offset in mm:	42
Wheel load in kg:	650

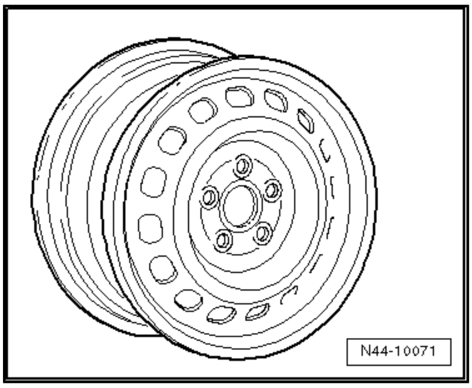

3C0 601 027 AA - Wheel and tyre combination ⇒ page 525

Size:	$6^1/_2$ J x 16
Wheel offset in mm:	42
Wheel load in kg:	650

Winter wheel

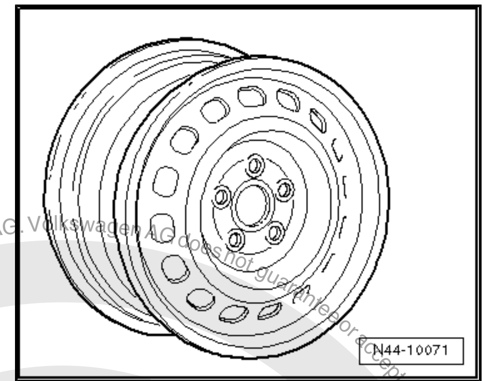

3C0 601 025 F - Wheel and tyre combination ⇒ page 525

Size:	$6^1/_2$ J x 16
Wheel offset in mm:	42
Wheel load in kg:	650

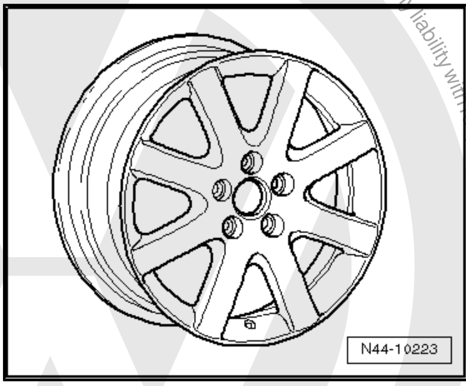

53.3.2 7 J x 16

> ⚠ **Caution**
>
> *Observe the allocation of wheels and tyres to the respective engines, which are listed in the overview table ⇒ page 525 .*

3C0 601 025, 3C0 601 025 AD - Wheel and tyre combination ⇒ page 526

Size:	7 J x 16
Wheel offset in mm:	45
Wheel load in kg:	650

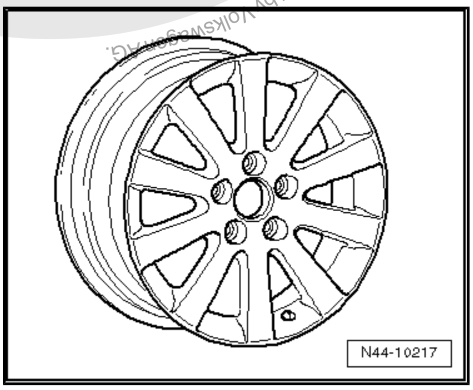

Protected by copyright. Copying for private or commercial purposes, in part or in whole, is not permitted unless authorised by Volkswagen AG. Volkswagen AG does not guarantee or accept any liability with respect to the correctness of information in this document. Copyright by Volkswagen AG.
satelettronica

3C0 601 025 A - Wheel and tyre combination ⇒ page 526

Size:	7 J x 16
Wheel offset in mm:	45
Wheel load in kg:	650

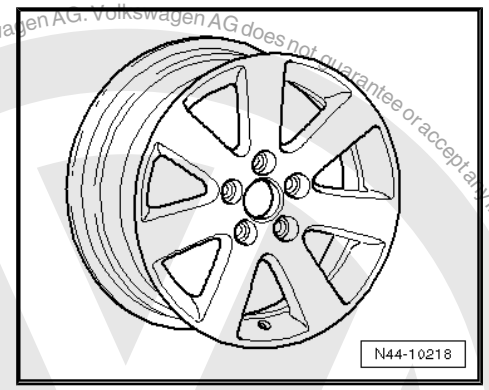

3C0 601 025 B - Wheel and tyre combination ⇒ page 526

Size:	7 J x 16
Wheel offset in mm:	45
Wheel load in kg:	650

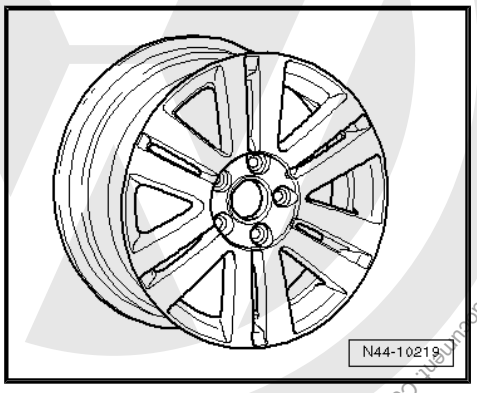

3C0 601 025 C - Wheel and tyre combination ⇒ page 526

Size:	7 J x 16 EH2 ⇒ page 59
Wheel offset in mm:	45
Wheel load in kg:	650

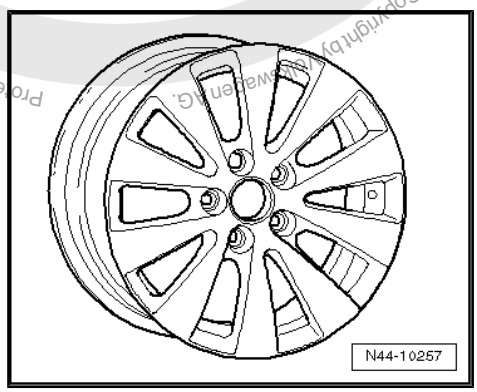

3C0 601 025 AE - Wheel and tyre combination ⇒ page 526

Size:	7 J x 16
Wheel offset in mm:	45
Wheel load in kg:	650

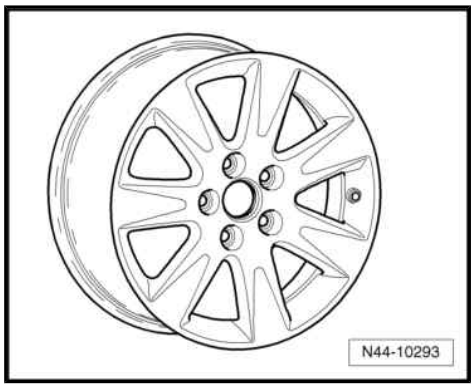

Protected by copyright. Copyright by Volkswagen AG. Volkswagen AG does not guarantee or accept any liability with respect to the correctness of information in this document. Copying for private or commercial purposes, in part or in whole, is not permitted unless authorised by Volkswagen AG.
satelettronica

3C0 601 025 AF - Wheel and tyre combination ⇒ page 526

Size:	7 J x 16
Wheel offset in mm:	45
Wheel load in kg:	650

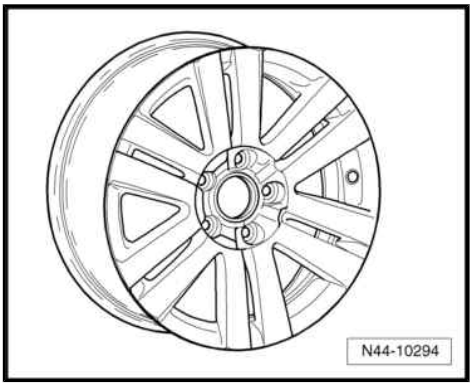

Protected by copyright. Copying for private or commercial purposes, in part or in whole, is not permitted unless authorised by Volkswagen AG. Volkswagen AG does not guarantee or accept any liability with respect to the correctness of information in this document. Copyright by Volkswagen AG.

53.3.3 6 J x 17

Caution

Observe the allocation of wheels and tyres to the respective engines, which are listed in the overview table ⇒ page 525 *.*

Winter wheel

3C0 601 025 M - Wheel and tyre combination ⇒ page 526

Size:	6 J x 17
Wheel offset in mm:	45
Wheel load in kg:	650

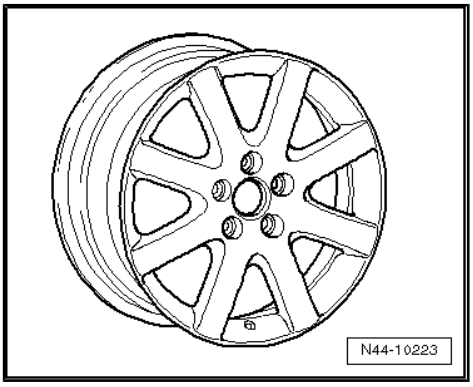

53.3.4 7$^1/_2$ J x 17

Caution

Observe the allocation of wheels and tyres to the respective engines, which are listed in the overview table ⇒ page 525 *.*

3C0 601 025 AQ - Wheel and tyre combination ⇒ page 526

Size:	7$^1/_2$ J x 17
Wheel offset in mm:	47
Wheel load in kg:	650

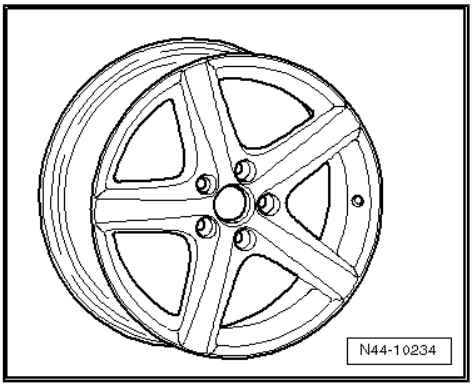

satelettronica

Protected by copyright. Copyright by Volkswagen AG. Volkswagen AG does not guarantee or accept any liability with respect to the correctness of information in this document. Copyright by Volkswagen AG. Protected by copyright. Copying for private or commercial purposes, in part or in whole, is not permitted unless authorised by Volkswagen AG.

3C0 601 025 BB - Wheel and tyre combination ⇒ page 526

Size:	$7^1/_2$ J x 17
Wheel offset in mm:	47
Wheel load in kg:	650

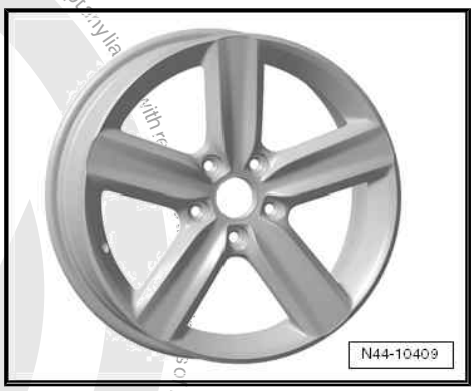

3C0 601 025 D - Wheel and tyre combination ⇒ page 526

Size:	$7^1/_2$ J x 17
Wheel offset in mm:	47
Wheel load in kg:	650

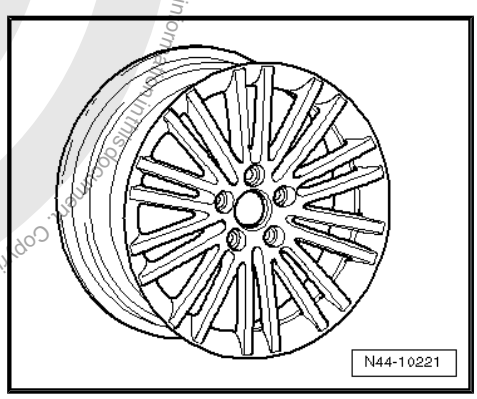

3C0 601 025 E - Wheel and tyre combination ⇒ page 526

Size:	$7^1/_2$ J x 17
Wheel offset in mm:	47
Wheel load in kg:	650

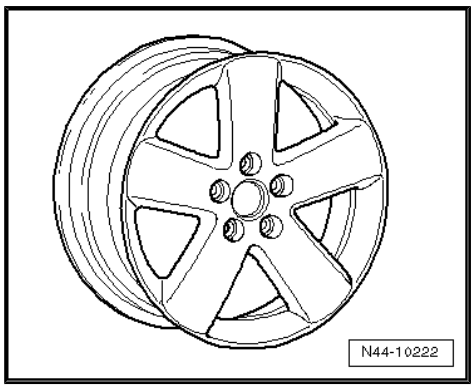

3C0 601 025 G - Wheel and tyre combination ⇒ page 526

Size:	$7^1/_2$ J x 17
Wheel offset in mm:	47
Wheel load in kg:	650

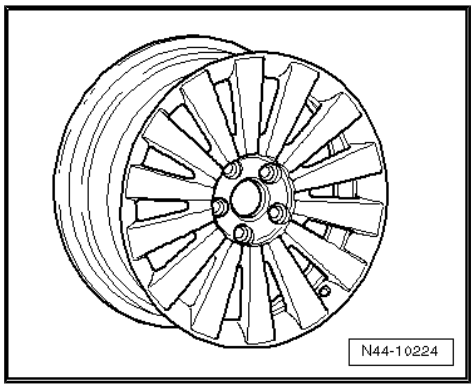

satelettronica

3C0 601 025 J - Wheel and tyre combination ⇒ page 526

Size:	$7^1/_2$ J x 17
Wheel offset in mm:	47
Wheel load in kg:	650

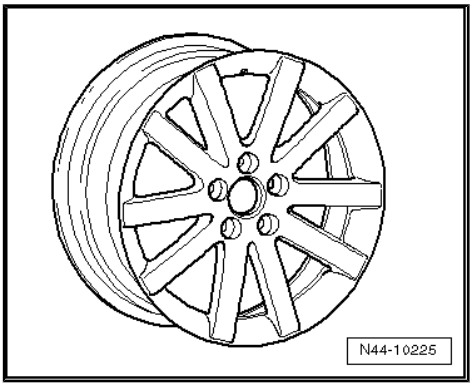

3C0 601 025 K - Wheel and tyre combination ⇒ page 526

Size:	$7^1/_2$ J x 17
Wheel offset in mm:	47
Wheel load in kg:	650

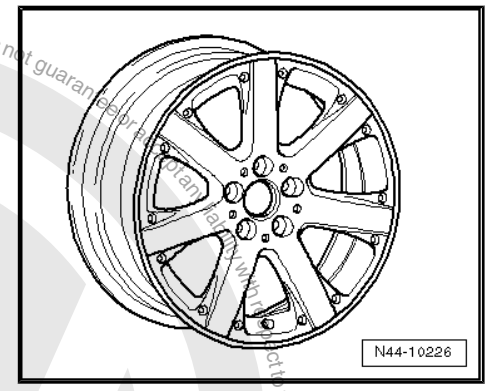

3C0 601 025 R - Wheel and tyre combination ⇒ page 526

Size:	$7^1/_2$ J x 17
Wheel offset in mm:	47
Wheel load in kg:	650

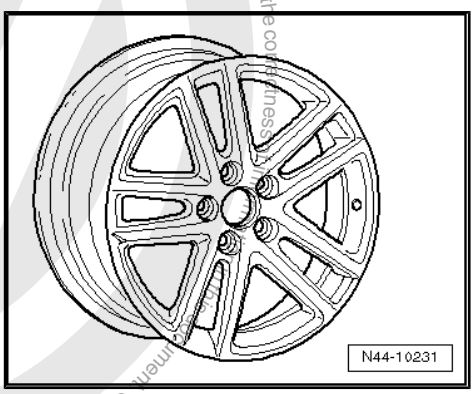

3C0 601 025 S - Wheel and tyre combination ⇒ page 526

Size:	$7^1/_2$ J x 17
Wheel offset in mm:	47
Wheel load in kg:	650

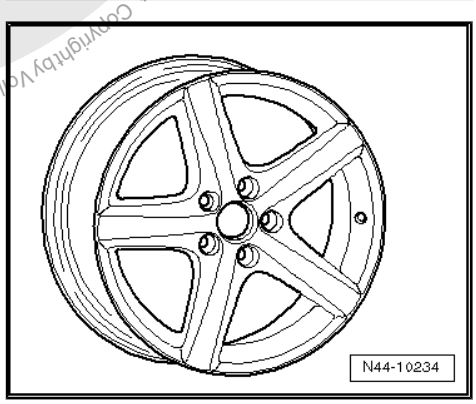

Volkswagen AG does not guarantee or assume any liability with respect to the correctness of information. Copyright by Volkswagen AG.
Protected by copyright. Copying for private or commercial purposes, in part or in whole, is not permitted unless authorised by Volkswagen AG.
satelettronica

3C0 601 025 AJ - Wheel and tyre combination ⇒ page 526

Size:	$7^1/_2$ J x 17
Wheel offset in mm:	47
Wheel load in kg:	650

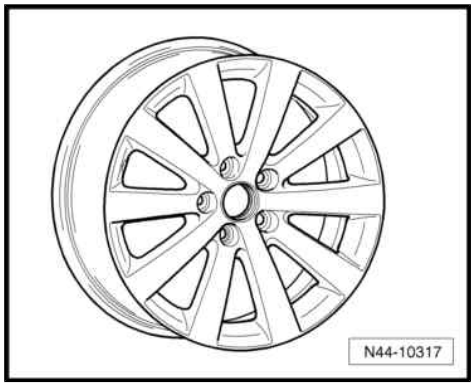

53.3.5 8 J x 18

Caution

Observe the allocation of wheels and tyres to the respective engines, which are listed in the overview table ⇒ page 525 *.*

Caution

8 J x 18 wheels can only be fitted under the following conditions:

- *The vehicle must be fitted with the sport suspension for 18″ wheels. The respective PR number and alignment specifications for the suspension can be found here: ⇒ Running gear, axles, steering; Rep. gr. 44 ; Wheel alignment; Specifications for wheel alignment .*
- *The camber on the rear axle must be -1°45'.*
- *Also, wider wheel arches* ⇒ page 4 *must be installed ⇒ Electronic Parts Catalogue "ETKA" .*

3C0 601 025 AA - Wheel and tyre combination ⇒ page 526

Size:	8 J x 18
Wheel offset in mm:	44
Wheel load in kg:	650

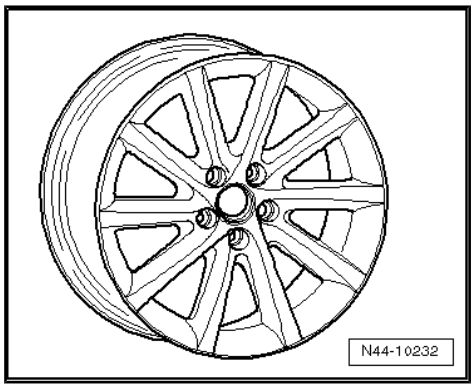

Protected by copyright. Copyright by Volkswagen AG. Copying in whole or in part is not permitted unless authorised by Volkswagen AG. Volkswagen AG does not guarantee or accept any liability with respect to the correctness of information in this document.
satelettronica

3C0 601 025 AB, 3C0 601 025 AP - Wheel and tyre combination
⇒ page 526

Size:	8 J x 18
Wheel offset in mm:	44
Wheel load in kg:	650

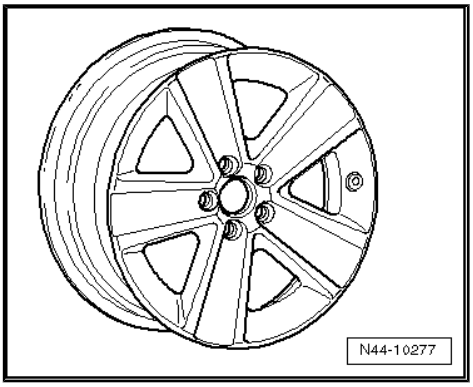

3C0 601 025 AC - Wheel and tyre combination
⇒ page 526

Size:	8 J x 18
Wheel offset in mm:	44
Wheel load in kg:	650

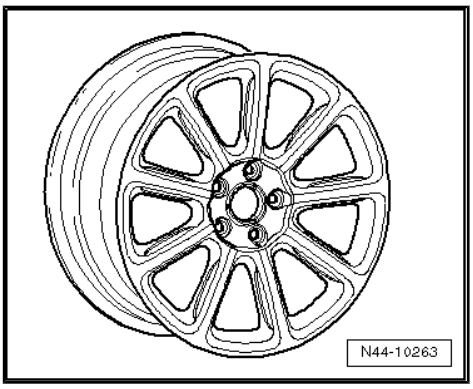

3C0 601 025 T, 3C0 601 025 AN - Wheel and tyre combination
⇒ page 526

Size:	8 J x 18
Wheel offset in mm:	44
Wheel load in kg:	650

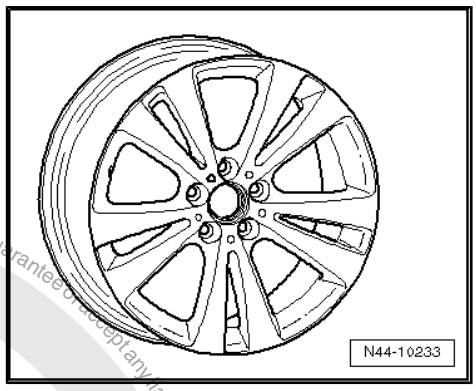

3C0 601 025 AG - Wheel and tyre combination
⇒ page 526

Size:	8 J x 18
Wheel offset in mm:	44
Wheel load in kg:	650

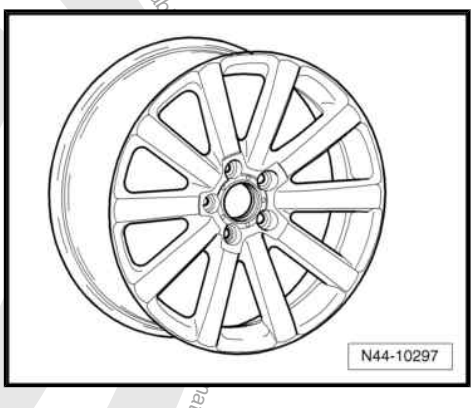

Protected by copyright. Copying for private or commercial purposes, in part or in whole, is not permitted unless authorised by Volkswagen AG. Volkswagen AG does not guarantee or accept any liab
Copyright by Volkswagen AG.
satelettronica

3C0 601 025 BA - Wheel and tyre combination ⇒ page 526

Size:	8 J x 18
Wheel offset in mm:	44
Wheel load in kg:	650

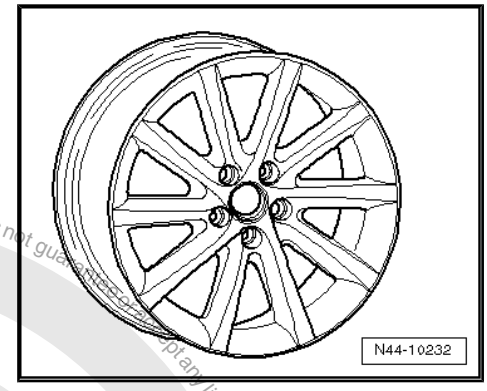

Protected by copyright. Copying for private or commercial purposes, in part or in whole, is not permitted unless authorised by Volkswagen AG. Volkswagen AG does not guarantee or accept any liability with respect to the correctness of information in this document. Copyright by Volkswagen AG.

satelettronica

54 Passat Variant from model year 2006

General

Volkswagen vehicles are built according to the latest findings in safety engineering. To keep it that way, we recommend the use of only genuine Volkswagen spare parts. You can recognise this by the VW Audi logo and by the part number. It has been established that these parts are reliable, safe and suitable.

Despite constant appraisal of the market, we cannot assess other products on these points, even when in isolated cases they have been passed by official inspectors or have been granted official approval. Therefore, we cannot, of course, assume any liability if these products are installed.

WARNING

The products from Volkswagen genuine parts and Votex genuine accessories may differ in fitting requirements, torque specifications and so on.

Always follow the respective fitting and operating instructions.

The wheel and tyre combinations or changes listed in the vehicle tables refer exclusively to Volkswagen Genuine wheels. Approval of wheel and tyre combinations or a change to wheels from the accessories trade is not possible with the certificate statement attached here.

WARNING

The fitting instructions and torque specifications for wheels from Votex genuine accessories may differ from those intended for wheels from Volkswagen genuine parts.

Therefore, always observe the torque settings for the wheel bolts as well as the respective fitting and operating instructions.

54.1 Passat Variant, type 3C model year 2006

Appendix for certificate statement 8106807121

The certificate statement can be found on the Volkswagen ServiceNet under Accessories/Tyres, Wheels and Tyres, Wheels and Tyres Guide.

Type Approval No.: e1*2001/116*0307*00 to e1*2001/116*0307*09

Overview

Model engine output	Tyres	Tyre size	Wheel rim	Off-set in mm	Snow chains	Remarks
1.6l 75 kW; 1.6l 85 kW petrol engines;	Standard tyres	205/55 R 16 91H	$6^1/_2$ J x 16 ⇒ page 563	42	Yes	

Copyright by Volkswagen AG. Volkswagen AG does not guarantee or accept any liability with respect to the correctness of information in this document. Copying for private or commercial purposes, in part or in whole, is not permitted unless authorised by Volkswagen AG.
satelettronica

Model engine output	Tyres	Tyre size	Wheel rim	Off-set in mm	Snow chains	Remarks
1.9l 77 kW TDI; 2.0l 88 kW TDI; 2.0l 90 kW TDI diesel engines	Modification	215/55 R 16 93H	$6^1/_2$ J x 16 ⇒ page 563	42	No	General information on: ◆ Winter tyres ⇒ page 15 ◆ Snow chains ⇒ page 18
		205/55 R 16 91H	7 J x 16 ⇒ page 564	45	No	Tyre makes recommended by Volkswagen: ◆ Summer tyres ⇒ page 662 ◆ All-season tyres ⇒ page 674 ◆ Winter tyres ⇒ page 692
		215/55 R 16 93H	7 J x 16 ⇒ page 564	45	No	
		235/45 R 17 94V	$7^1/_2$ J x 17 ⇒ page 566	47	No	
		235/40 R 18 95Y* ⇒ page 538	8 J x 18 ⇒ page 569	44	No	◆ * 235/40 R 18 95Y tyres on 8 J x 18 rims with an offset of 44 are only possible if the specified conditions ⇒ page 569 are met! ◆ 235/40 R 18 95W tyres on 8 J x 18 rims with an offset of 44 may be used instead of 235/40 R 18 95Y tyres on 8 J x 18 rims with an offset of 44. Observe authorisation by Kraftfahrt-Bundesamtes (German road traffic authority) “Authorisation of 95W tyres for Passat”. This is located on the Volkswagen ServiceNet under Accessories/ Tyres, Wheels and Tyres, Wheels and Tyres Guide.
	Winter tyres	205/55 R 16 91H/V	$6^1/_2$ J x 16 ⇒ page 563	42	Yes	
		205/50 R 17 93H/V	6 J x 17 ⇒ page 566	45	Yes	
2.0l 110 kW petrol engine	Standard tyres	205/55 R 16 91V	$6^1/_2$ J x 16 ⇒ page 563	42	Yes	

Protected by copyright. Copying for private or commercial purposes, in part or in whole, is not permitted unless authorised by Volkswagen AG. Volkswagen AG does not guarantee or accept any liability with respect to the correctness of information in this document. Copyright by Volkswagen AG.

satelettronica

Model engine output	Tyres	Tyre size	Wheel rim	Off-set in mm	Snow chains	Remarks
	Modification	215/55 R 16 93V	$6^1/_2$ J x 16 ⇒ page 563	42	No	
		205/55 R 16 91V	7 J x 16 ⇒ page 564	45	No	
		215/55 R 16 93V	7 J x 16 ⇒ page 564	45	No	
		235/45 R 17 94V	$7^1/_2$ J x 17 ⇒ page 566	47	No	
		235/40 R 18 95Y* ⇒ page 538	8 J x 18 ⇒ page 569	44	No	
	Winter tyres	205/55 R 16 91H/V	$6^1/_2$ J x 16 ⇒ page 563	42	Yes	
		205/50 R 17 93H/V	6 J x 17 ⇒ page 566	45	Yes	
2.0l 100 kW TDI 2.0l 103 kW TDI 2.0l 120 kW TDI 2.0l 125 kW TDI diesel engines	Standard tyres	205/55 R 16 94V	$6^1/_2$ J x 16 ⇒ page 563	42	Yes	Vehicles with the 100/103/120/125 kW TDI engine that have the load index LI 94 entered in the vehicle documents (205/55 R16 94V), may also be fitted with winter tyres with load index LI 91 (205/55 R 16 91H). To do this, the "approval certificate and permit for submission to the registration authority" have to be kept in the vehicle (in Germany) with inspection report no. 1423/07.
	Modification	215/55 R 16 93V	$6^1/_2$ J x 16 ⇒ page 563	42	No	
		205/55 R 16 94V	7 J x 16 ⇒ page 564	45	No	
		215/55 R 16 93V	7 J x 16 ⇒ page 564	45	No	
		235/45 R 17 94V	$7^1/_2$ J x 17 ⇒ page 566	47	No	
		235/40 R 18 95Y* ⇒ page 538	8 J x 18 ⇒ page 569	44	No	
	Winter tyres	205/55 R 16 91H/V	$6^1/_2$ J x 16 ⇒ page 563	42	Yes	

Protected by copyright. Copying for private or commercial purposes, in part or in whole, is not permitted unless authorised by Volkswagen AG. Volkswagen AG does not guarantee or accept any liability with respect to the correctness of information in this document. Copyright by Volkswagen AG.

satelettronica

Model engine output	Tyres	Tyre size	Wheel rim	Off-set in mm	Snow chains	Remarks
		205/50 R 17 93H/V	6 J x 17 ⇒ page 566	45	Yes	
2.0l 147 kW petrol engine	Standard tyres	205/55 R 16 91W	6 1/2 J x 16 ⇒ page 563	42	Yes	
	Modification	215/55 R 16 93W	6 1/2 J x 16 ⇒ page 563	42	No	
		215/55 R 16 93W	7 J x 16 ⇒ page 564	45	No	
		235/45 R 17 94W	7 1/2 J x 17 ⇒ page 566	47	No	
		235/40 R 18 95Y* ⇒ page 538	8 J x 18 ⇒ page 569	44	No	
	Winter tyres	205/55 R 16 91H/V	6 1/2 J x 16 ⇒ page 563	42	Yes	
		205/50 R 17 93H/V	6 J x 17 ⇒ page 566	45	Yes	
3.2l 184 kW petrol engine	Standard tyres	235/45 R 17 94W	7 1/2 J x 17 ⇒ page 566	47	No	
	Modification	235/40 R 18 95Y* ⇒ page 538	8 J x 18 ⇒ page 569	44	No	
	Winter tyres	205/50 R 17 93H/V	6 J x 17 ⇒ page 566	45	Yes	

Tyre inflation pressures are located on a sticker in the fuel tank flap or in ⇒ Maintenance ; Booklet ; Check tyres: condition, profile, inflation pressure, depth of tread .

Copyright by Volkswagen AG. Volkswagen AG does not guarantee or accept any liability with respect to the correctness of information in this document. Copying for private or commercial purposes, in part or in whole, is not permitted unless authorised by Volkswagen AG.

satelettronica

54.2 Passat Variant, type 3C model year 2007 to model year 2008

Caution

*Observe wheel and tyre combinations for vehicles from type approval number: e1*2001/116*0307*13 to e1*2001/116*0307*14 ⇒ page 545 .*

*Observe wheel and tyre combinations for vehicles as of type approval number: e1*2001/116*0307*15 ⇒ page 548 .*

Appendix for certificate statement 8106807121

The certificate statement can be found on the Volkswagen ServiceNet under Accessories/Tyres, Wheels and Tyres, Wheels and Tyres Guide.

Type Approval No.: e1*2001/116*0307*10 to e1*2001/116*0307*12

Overview

Model engine output	Tyres	Tyre size	Wheel rim	Off-set in mm	Snow chains	Remarks
1.6l 75 kW; 1.6l 85 kW petrol engines;	Standard tyres	205/55 R 16 91H	6 1/2 J x 16 ⇒ page 563	42	Yes	
1.9l 77 kW TDI; diesel engines	Modification	215/55 R 16 93H/V	6 1/2 J x 16 ⇒ page 563	42	No	General information on: ◆ Winter tyres ⇒ page 15 ◆ Snow chains ⇒ page 18
2.0l 110 kW petrol engine, 4MOTION		205/55 R 16 91H/V	7 J x 16 ⇒ page 564	45	No	Tyre makes recommended by Volkswagen: ◆ Summer tyres ⇒ page 660 ◆ All-season tyres ⇒ page 674 ◆ Winter tyres ⇒ page 691
2.0l 110 kW petrol engine with automatic gearbox		215/55 R 16 93H/V	7 J x 16 ⇒ page 564	45	No	
		235/45 R 17 94H/V	7 1/2 J x 17 ⇒ page 566	47	No	
		235/40 R 18 95Y* ⇒ page 541	8 J x 18 ⇒ page 569	44	No	◆ * 235/40 R 18 95Y tyres on 8 J x 18 rims with an offset of 44 are only possible if the specified conditions ⇒ page 569 are met!
	Winter tyres	205/55 R 16 91H/V	6 1/2 J x 16 ⇒ page 563	42	Yes	

© Volkswagen AG does not guarantee or accept any liability with respect to the accuracy of information in this document. Copyright by Volkswagen AG. Protected by copyright. Copying for private or commercial purposes, in part or in whole, is not permitted unless authorised by Volkswagen AG.

satelettronica

Model engine output	Tyres	Tyre size	Wheel rim	Off-set in mm	Snow chains	Remarks
		205/50 R 17 93H/V	6 J x 17 ⇒ page 566	45	Yes	♦ 235/40 R 18 95W tyres on 8 J x 18 rims with an offset of 44 may be used instead of 235/40 R 18 95Y tyres on 8 J x 18 rims with an offset of 44. Observe authorisation by Kraftfahrt-Bundesamtes (German road traffic authority) “Authorisation of 95W tyres for Passat”. This is located on the Volkswagen ServiceNet under Accessories/ Tyres, Wheels and Tyres, Wheels and Tyres Guide.
2.0l 110 kW petrol engine with manual gearbox	Standard tyres	205/55 R 16 91V	6 1/2 J x 16 ⇒ page 563	42	Yes	
	Modification	215/55 R 16 93V	6 1/2 J x 16 ⇒ page 563	42	No	
		205/55 R 16 91V	7 J x 16 ⇒ page 564	45	No	
		215/55 R 16 93V	7 J x 16 ⇒ page 564	45	No	
		235/45 R 17 94V	7 1/2 J x 17 ⇒ page 566	47	No	
		235/40 R 18 95Y* ⇒ page 541	8 J x 18 ⇒ page 569	44	No	
	Winter tyres	205/55 R 16 91H/V	6 1/2 J x 16 ⇒ page 563	42	Yes	
		205/50 R 17 93H/V	6 J x 17 ⇒ page 566	45	Yes	

Protected by copyright. Copying for private or commercial purposes, in part or in whole, is not permitted unless authorised by Volkswagen AG. Volkswagen AG does not guarantee or accept any liability with respect to the correctness of information in this document. Copyright by Volkswagen AG.

satelettronica

Model engine output	Tyres	Tyre size	Wheel rim	Off-set in mm	Snow chains	Remarks
2.0l 100 kW TDI diesel engine	Standard tyres	205/55 R 16 94H	$6^1/_2$ J x 16 ⇒ page 563	42	Yes	Vehicles with the 100/103 kW TDI engine that have the load index LI 94 entered in the vehicle documents (205/55 R16 94V), may also be fitted with winter tyres with load index LI 91 (205/55 R 16 91H). To do this, the "approval certificate and permit for submission to the registration authority" have to be kept in the vehicle (in Germany) with inspection report no. 1423/07.
2.0l 103 kW TDI diesel engine	Modification	215/55 R 16 93H/V	$6^1/_2$ J x 16 ⇒ page 563	42	No	
		205/55 R 16 94H/V	7 J x 16 ⇒ page 564	45	No	
		215/55 R 16 93H/V	7 J x 16 ⇒ page 564	45	No	
		235/45 R 17 94H/V	$7^1/_2$ J x 17 ⇒ page 566	47	No	
		235/40 R 18 95Y* ⇒ page 541	8 J x 18 ⇒ page 569	44	No	
	Winter tyres	205/55 R 16 91H/V	$6^1/_2$ J x 16 ⇒ page 563	42	Yes	
		205/50 R 17 93H/V	6 J x 17 ⇒ page 566	45	Yes	
2.0l 120 kW TDI 2.0l 125 kW TDI diesel engines	Standard tyres	205/55 R 16 94V	$6^1/_2$ J x 16 ⇒ page 563	42	Yes	Vehicles with the 120/125 kW TDI engine that have the load index LI 94 entered in the vehicle documents (205/55 R16 94V), may also be fitted with winter tyres with load index LI 91 (205/55 R 16 91H). To do this, the "approval certificate and permit for submission to the registration authority" have to be kept in the vehicle (in Germany) with inspection report no. 1423/07.
	Modification	215/55 R 16 93V	$6^1/_2$ J x 16 ⇒ page 563	42	No	
		205/55 R 16 94V	7 J x 16 ⇒ page 564	45	No	
		215/55 R 16 93V	7 J x 16 ⇒ page 564	45	No	
		235/45 R 17 94V	$7^1/_2$ J x 17 ⇒ page 566	47	No	
		235/40 R 18 95Y* ⇒ page 541	8 J x 18 ⇒ page 569	44	No	

satelettronica

Model engine output	Tyres	Tyre size	Wheel rim	Off-set in mm	Snow chains	Remarks
	Winter tyres	205/55 R 16 91H/V	$6^1/_2$ J x 16 ⇒ page 563	42	Yes	
		205/50 R 17 93H/V	6 J x 17 ⇒ page 566	45	Yes	
2.0l 147 kW petrol engine	Standard tyres	205/55 R 16 91W	$6^1/_2$ J x 16 ⇒ page 563	42	Yes	
	Modification	215/55 R 16 93W	$6^1/_2$ J x 16 ⇒ page 563	42	No	
		215/55 R 16 93W	7 J x 16 ⇒ page 564	45	No	
		235/45 R 17 94W	$7^1/_2$ J x 17 ⇒ page 566	47	No	
		235/40 R 18 95Y* ⇒ page 541	8 J x 18 ⇒ page 569	44	No	
	Winter tyres	205/55 R 16 91H/V	$6^1/_2$ J x 16 ⇒ page 563	42	Yes	
		205/50 R 17 93H/V	6 J x 17 ⇒ page 566	45	Yes	
3.2l 184 kW petrol engine	Standard tyres	235/45 R 17 94W	$7^1/_2$ J x 17 ⇒ page 566	47	No	
	Modification	235/40 R 18 95Y* ⇒ page 541	8 J x 18 ⇒ page 569	44	No	
	Winter tyres	205/50 R 17 93H/V	6 J x 17 ⇒ page 566	45	Yes	

Tyre inflation pressures are located on a sticker in the fuel tank flap or in ⇒ Maintenance ; Booklet ; Check tyres: condition, profile, inflation pressure, depth of tread .

Appendix for certificate statement 8106807121

Protected copyright. Copying for private or commercial purposes, in part or in whole, is not permitted unless authorised by Volkswagen AG. Volkswagen AG does not guarantee or accept any liability with respect to the correctness of information in this document. Copyright by Volkswagen AG.
satelettronica

The certificate statement can be found on the Volkswagen ServiceNet under Accessories/Tyres, Wheels and Tyres, Wheels and Tyres Guide.

Type Approval No.: e1*2001/116*0307*13 to e1*2001/116*0307*14

Overview

Model engine output	Tyres	Tyre size	Wheel rim	Off-set in mm	Snow chains	Remarks
1.6l 75 kW; 1.6l 85 kW 1.4l 90 kW petrol engines;	Standard tyres	205/55 R 16 91H	6 1/2 J x 16 ⇒ page 563	42	Yes	
1.9l 77 kW TDI; 2.0l 100 kW TDI; 2.0l 103 kW TDI; diesel engines	Modification	215/55 R 16 93H/V	6 1/2 J x 16 ⇒ page 563	42	No	General information on: ◆ Winter tyres ⇒ page 15 ◆ Snow chains ⇒ page 18
2.0l 110 kW petrol engine, 4MOTION		205/55 R 16 91H/V	7 J x 16 ⇒ page 564	45	No	Tyre makes recommended by Volkswagen: ◆ Summer tyres ⇒ page 660 ◆ All-season tyres ⇒ page 674 ◆ Winter tyres ⇒ page 691
2.0l 110 kW petrol engine with automatic gearbox		215/55 R 16 93H/V	7 J x 16 ⇒ page 564	45	No	
		235/45 R 17 94H/V	7 1/2 J x 17 ⇒ page 566	47	No	
		235/40 R 18 95Y* ⇒ page 545	8 J x 18 ⇒ page 569	44	No	◆ * 235/40 R 18 95Y tyres on 8 J x 18 rims with an offset of 44 are only possible if the specified conditions ⇒ page 569 are met!
	Winter tyres	205/55 R 16 91H/V	6 1/2 J x 16 ⇒ page 563	42	Yes	

Copyright by Volkswagen AG. Volkswagen AG does not guarantee or accept any liability with respect to the correctness of information in this document. Copying for private or commercial purposes, in part or in whole, is not permitted unless authorised by Volkswagen AG. Protected by copyright.

satelettronica

Protected by copyright. Copying for private or commercial purposes, in part or in whole, is not permitted unless authorised by Volkswagen AG. Volkswagen AG does not guarantee or accept any liability with respect to the correctness of information in this document. Copyright by Volkswagen AG.

Model engine output	Tyres	Tyre size	Wheel rim	Off-set in mm	Snow chains	Remarks
		205/50 R 17 93H/V	6 J x 17 ⇒ page 566	45	Yes	♦ 235/40 R 18 95W tyres on 8 J x 18 rims with an offset of 44 may be used instead of 235/40 R 18 95Y tyres on 8 J x 18 rims with an offset of 44. Observe authorisation by Kraftfahrt-Bundesamtes (German road traffic authority) "Authorisation of 95W tyres for Passat". This is located on the Volkswagen ServiceNet under Accessories/ Tyres, Wheels and Tyres, Wheels and Tyres Guide.
2.0l 110 kW petrol engine with manual gearbox	Standard tyres	205/55 R 16 91V	6 1/2 J x 16 ⇒ page 563	42	Yes	
1.8l 118 kW petrol engine	Modification	215/55 R 16 93V	6 1/2 J x 16 ⇒ page 563	42	No	
2.0l 120 kW TDI 2.0l 125 kW TDI diesel engines		205/55 R 16 91V	7 J x 16 ⇒ page 564	45	No	
		215/55 R 16 93V	7 J x 16 ⇒ page 564	45	No	
		235/45 R 17 94V	7 1/2 J x 17 ⇒ page 566	47	No	
		235/40 R 18 95Y* ⇒ page 545	8 J x 18 ⇒ page 569	44	No	
	Winter tyres	205/55 R 16 91H/V	6 1/2 J x 16 ⇒ page 563	42	Yes	
		205/50 R 17 93H/V	6 J x 17 ⇒ page 566	45	Yes	

satelettronica

Model engine output	Tyres	Tyre size	Wheel rim	Off-set in mm	Snow chains	Remarks
2.0l 147 kW petrol engine	Standard tyres	205/55 R 16 91W	$6^1/_2$ J x 16 ⇒ page 563	42	Yes	
	Modification	215/55 R 16 93W	$6^1/_2$ J x 16 ⇒ page 563	42	No	
		215/55 R 16 93W	7 J x 16 ⇒ page 564	45	No	
		235/45 R 17 94W	$7^1/_2$ J x 17 ⇒ page 566	47	No	
		235/40 R 18 95Y* ⇒ page 545	8 J x 18 ⇒ page 569	44	No	
	Winter tyres	205/55 R 16 91H/V	$6^1/_2$ J x 16 ⇒ page 563	42	Yes	
		205/50 R 17 93H/V	6 J x 17 ⇒ page 566	45	Yes	
3.2l 184 kW petrol engine	Standard tyres	235/45 R 17 94W	$7^1/_2$ J x 17 ⇒ page 566	47	No	
	Modification	235/40 R 18 95Y* ⇒ page 545	8 J x 18 ⇒ page 569	44	No	
	Winter tyres	205/50 R 17 93H/V	6 J x 17 ⇒ page 566	45	Yes	

Tyre inflation pressures are located on a sticker in the fuel tank flap or in ⇒ Maintenance ; Booklet ; Check tyres: condition, profile, inflation pressure, depth of tread .

Appendix for certificate statement 8106807121

The certificate statement can be found on the Volkswagen ServiceNet under Accessories/Tyres, Wheels and Tyres, Wheels and Tyres Guide.

Copyright by Volkswagen AG. Volkswagen AG does not guarantee or accept any liability with respect to the correctness of information in this document. Copyright by Volkswagen AG. Copyright. Copying for private or commercial purposes, in part or in whole, is not permitted unless authorised by Volkswagen AG.

satelettronica

Type Approval No.: e1*2001/116*0307*15

Overview

Model engine output	Tyres	Tyre size	Wheel rim	Off-set in mm	Snow chains	Remarks
1.6l 75 kW; 1.6l 85 kW 1.4l 90 kW petrol engines;	Standard tyres	205/55 R 16 91H	$6^1/_2$ J x 16 ⇒ page 563	42	Yes	
1.9l 77 kW TDI; 2.0l 81 kW TDI; 2.0l 100 kW TDI; 2.0l 103 kW TDI diesel engines	Modification	215/55 R 16 93H/V	$6^1/_2$ J x 16 ⇒ page 563	42	No	General information on: ♦ Winter tyres ⇒ page 15 ♦ Snow chains ⇒ page 18
2.0l 110 kW petrol engine, 4MOTION		205/55 R 16 91H/V	7 J x 16 ⇒ page 564	45	No	Tyre makes recommended by Volkswagen:
2.0l 110 kW petrol engine with automatic gearbox		215/55 R 16 93H/V	7 J x 16 ⇒ page 564	45	No	♦ Summer tyres ⇒ page 660 ♦ All-season tyres ⇒ page 674 ♦ Winter tyres ⇒ page 691
		235/45 R 17 94H/V	$7^1/_2$ J x 17 ⇒ page 566	47	No	
		235/40 R 18 95Y* ⇒ page 548	8 J x 18 ⇒ page 569	44	No	♦ * 235/40 R 18 95Y tyres on 8 J x 18 rims with an offset of 44 are only possible if the specified conditions ⇒ page 569 are met!
	Winter tyres	205/55 R 16 91H/V	$6^1/_2$ J x 16 ⇒ page 563	42	Yes	

Protected by copyright. Copying for private or commercial purposes, in part or in whole, is not permitted unless authorised by Volkswagen AG. Volkswagen AG does not guarantee or accept any liability with respect to the correctness of information in this document. Copyright by Volkswagen AG.

satelettronica

Model engine output	Tyres	Tyre size	Wheel rim	Off-set in mm	Snow chains	Remarks
		205/50 R 17 93H/V	6 J x 17 ⇒ page 566	45	Yes	♦ 235/40 R 18 95W tyres on 8 J x 18 rims with an offset of 44 may be used instead of 235/40 R 18 95Y tyres on 8 J x 18 rims with an offset of 44. Observe authorisation by Kraftfahrt-Bundesamtes (German road traffic authority) "Authorisation of 95W tyres for Passat". This is located on the Volkswagen ServiceNet under Accessories/ Tyres, Wheels and Tyres, Wheels and Tyres Guide.
2.0l 105 kW TDI diesel engine	Standard tyres	205/55 R 16 91H	$6^1/_2$ J x 16 ⇒ page 563	42	Yes	
	Modification	205/55 R 16 91H/V	7 J x 16 ⇒ page 564	45	No	
		205/50 R 17 93H/V	6 J x 17 ⇒ page 566	45	Yes	
		235/45 R 17 94H/V	$7^1/_2$ J x 17 ⇒ page 566	47	No	
		235/40 R 18 95Y* ⇒ page 548	8 J x 18 ⇒ page 569	44	No	
	Winter tyres	205/55 R 16 91H/V	$6^1/_2$ J x 16 ⇒ page 563	42	Yes	
		205/50 R 17 93H/V	6 J x 17 ⇒ page 566	45	Yes	
1.4l 110 kW EcoFuel	Standard tyres	205/55 R 16 91V	$6^1/_2$ J x 16 ⇒ page 563	42	Yes	

Protected by copyright. Copying for private or commercial purposes, in part or in whole, is not permitted unless authorised by Volkswagen AG. Volkswagen AG does not guarantee or accept any liability with respect to the correctness of information in this document. Copyright by Volkswagen AG.

satelettronica

Published by Volkswagen AG. Volkswagen AG does not guarantee or accept any liability with respect to the correctness of information in this document. Copyright by Volkswagen AG. Protected by copyright. Copying for private or commercial purposes, in part or in whole, is not permitted unless authorised by Volkswagen AG.

Model engine output	Tyres	Tyre size	Wheel rim	Off-set in mm	Snow chains	Remarks
	Modification	205/55 R 16 91V	7 J x 16 ⇒ page 564	45	No	
		205/50 R 17 93V	6 J x 17 ⇒ page 566	45	Yes	
		235/45 R 17 94V	7 1/2 J x 17 ⇒ page 566	47	No	
	Winter tyres	205/55 R 16 91H/V	6 1/2 J x 16 ⇒ page 563	42	Yes	
		205/50 R 17 93H/V	6 J x 17 ⇒ page 566	45	Yes	
2.0l 110 kW petrol engine with manual gearbox	Standard tyres	205/55 R 16 91V	6 1/2 J x 16 ⇒ page 563	42	Yes	
1.8l 118 kW petrol engine	Modification	215/55 R 16 93V	6 1/2 J x 16 ⇒ page 563	42	No	
2.0l 120 kW TDI 2.0l 125 kW TDI diesel engines		205/55 R 16 91V	7 J x 16 ⇒ page 564	45	No	
		215/55 R 16 93V	7 J x 16 ⇒ page 564	45	No	
		235/45 R 17 94V	7 1/2 J x 17 ⇒ page 566	47	No	
		235/40 R 18 95Y* ⇒ page 548	8 J x 18 ⇒ page 569	44	No	
	Winter tyres	205/55 R 16 91H/V	6 1/2 J x 16 ⇒ page 563	42	Yes	
		205/50 R 17 93H/V	6 J x 17 ⇒ page 566	45	Yes	
2.0l 147 kW petrol engine	Standard tyres	205/55 R 16 91V	6 1/2 J x 16 ⇒ page 563	42	Yes	

satelettronica

Model engine output	Tyres	Tyre size	Wheel rim	Off-set in mm	Snow chains	Remarks
	Modification	215/55 R 16 93W	$6^1/_2$ J x 16 ⇒ page 563	42	No	
		205/55 R 16 91V	7 J x 16 ⇒ page 564	45	No	
		215/55 R 16 93W	7 J x 16 ⇒ page 564	45	No	
		235/45 R 17 94W	$7^1/_2$ J x 17 ⇒ page 566	47	No	
		235/40 R 18 95Y* ⇒ page 548	8 J x 18 ⇒ page 569	44	No	
	Winter tyres	205/55 R 16 91H/V	$6^1/_2$ J x 16 ⇒ page 563	42	Yes	
		205/50 R 17 93H/V	6 J x 17 ⇒ page 566	45	Yes	
3.2l 184 kW petrol engine	Standard tyres	235/45 R 17 94W	$7^1/_2$ J x 17 ⇒ page 566	47	No	
	Modification	235/40 R 18 95Y* ⇒ page 548	8 J x 18 ⇒ page 569	44	No	
	Winter tyres	205/50 R 17 93H/V	6 J x 17 ⇒ page 566	45	Yes	

Tyre inflation pressures are located on a sticker in the fuel tank flap or in ⇒ Maintenance ; Booklet ; Check tyres: condition, profile, inflation pressure, depth of tread .

54.3 Passat Variant, type 3C model year 2009

Caution

*Observe wheel and tyre combinations for vehicles as of type approval number: e1*2001/116*0307*19 ⇒ page 556 .*

Appendix for certificate statement 8106807121

Protected by copyright. Copying for private or commercial purposes, in part or in whole, is not permitted unless authorised by Volkswagen AG. Volkswagen AG does not guarantee or accept any liability with respect to the correctness of information in this document. Copyright by Volkswagen AG.

satelettronica

The certificate statement can be found on the Volkswagen ServiceNet under Accessories/Tyres, Wheels and Tyres, Wheels and Tyres Guide.

Type Approval No.: e1*2001/116*0307*16 to e1*2001/116*0307*18

Overview

Model engine output	Tyres	Tyre size	Wheel rim	Off-set in mm	Snow chains	Remarks
1.6l 75 kW; 1.6l 85 kW 1.4l 90 kW petrol engines;	Standard tyres	205/55 R 16 91H	$6^1/_2$ J x 16 ⇒ page 563	42	Yes	
1.9l 77 kW TDI; 2.0l 81 kW TDI; 2.0l 100 kW TDI; 2.0l 103 kW TDI diesel engines	Modification	215/55 R 16 93H/V	$6^1/_2$ J x 16 ⇒ page 563	42	No	General information on: ◆ Winter tyres ⇒ page 15 ◆ Snow chains ⇒ page 18
2.0l 110 kW petrol engine, 4MOTION		205/55 R 16 91H/V	7 J x 16 ⇒ page 564	45	No	Tyre makes recommended by Volkswagen:
2.0l 110 kW petrol engine with automatic gearbox		215/55 R 16 93H/V	7 J x 16 ⇒ page 564	45	No	◆ Summer tyres ⇒ page 660 ◆ All-season tyres ⇒ page 674 ◆ Winter tyres ⇒ page 691
		235/45 R 17 94H/V	$7^1/_2$ J x 17 ⇒ page 566	47	No	
		235/40 R 18 95Y* ⇒ page 552	8 J x 18 ⇒ page 569	44	No	◆ * 235/40 R 18 95Y tyres on 8 J x 18 rims with an offset of 44 are only possible if the specified conditions ⇒ page 569 are met!
	Winter tyres	205/55 R 16 91H/V	$6^1/_2$ J x 16 ⇒ page 563	42	Yes	

Volkswagen AG. Volkswagen AG does not guarantee or accept any liability with respect to the correctness of information in this document. Copyright by Volkswagen AG.
Protected by copyright. Copying for private or commercial purposes, in part or in whole, is not permitted unless authorised by Volkswagen AG.
satelettronica

Model engine output	Tyres	Tyre size	Wheel rim	Off-set in mm	Snow chains	Remarks
		205/50 R 17 93H/V	6 J x 17 ⇒ page 566	45	Yes	♦ 235/40 R 18 95W tyres on 8 J x 18 rims with an offset of 44 may be used instead of 235/40 R 18 95Y tyres on 8 J x 18 rims with an offset of 44. Observe authorisation by Kraftfahrt-Bundesamtes (German road traffic authority) "Authorisation of 95W tyres for Passat". This is located on the Volkswagen ServiceNet under Accessories/ Tyres, Wheels and Tyres, Wheels and Tyres Guide.
2.0l 105 kW TDI diesel engine	Standard tyres	205/55 R 16 91H	$6^1/_2$ J x 16 ⇒ page 563	42	Yes	
	Modification	205/55 R 16 91H/V	7 J x 16 ⇒ page 564	45	No	
		205/50 R 17 93H/V	6 J x 17 ⇒ page 566	45	Yes	
		235/45 R 17 94H/V	$7^1/_2$ J x 17 ⇒ page 566	47	No	
		235/40 R 18 95Y* ⇒ page 552	8 J x 18 ⇒ page 569	44	No	
	Winter tyres	205/55 R 16 91H/V	$6^1/_2$ J x 16 ⇒ page 563	42	Yes	
		205/50 R 17 93H/V	6 J x 17 ⇒ page 566	45	Yes	
1.4l 110 kW EcoFuel	Standard tyres	205/55 R 16 91V	$6^1/_2$ J x 16 ⇒ page 563	42	Yes	

Protected by copyright. Copying for private or commercial purposes, in part or in whole, is not permitted unless authorised by Volkswagen AG. Volkswagen AG does not guarantee or accept any liability with respect to the correctness of information in this document. Copyright by Volkswagen AG.

satelettronica

Model engine output	Tyres	Tyre size	Wheel rim	Off-set in mm	Snow chains	Remarks
	Modification	205/55 R 16 91V	7 J x 16 ⇒ page 564	45	No	
		205/50 R 17 93V	6 J x 17 ⇒ page 566	45	Yes	
		235/45 R 17 94V	7 1/2 J x 17 ⇒ page 566	47	No	
	Winter tyres	205/55 R 16 91H/V	6 1/2 J x 16 ⇒ page 563	42	Yes	
		205/50 R 17 93H/V	6 J x 17 ⇒ page 566	45	Yes	
2.0l 110 kW petrol engine with manual gearbox	Standard tyres	205/55 R 16 91V	6 1/2 J x 16 ⇒ page 563	42	Yes	
1.8l 118 kW petrol engine	Modification	215/55 R 16 93V	6 1/2 J x 16 ⇒ page 563	42	No	
2.0l 120 kW TDI 2.0l 125 kW TDI diesel engines		205/55 R 16 91V	7 J x 16 ⇒ page 564	45	No	
		215/55 R 16 93V	7 J x 16 ⇒ page 564	45	No	
		235/45 R 17 94V	7 1/2 J x 17 ⇒ page 566	47	No	
		235/40 R 18 95Y* ⇒ page 552	8 J x 18 ⇒ page 569	44	No	
	Winter tyres	205/55 R 16 91H/V	6 1/2 J x 16 ⇒ page 563	42	Yes	
		205/50 R 17 93H/V	6 J x 17 ⇒ page 566	45	Yes	
2.0l 147 kW petrol engine	Standard tyres	205/55 R 16 91V	6 1/2 J x 16 ⇒ page 563	42	Yes	

Protected by copyright. Copying for private or commercial purposes, in part or in whole, is not permitted unless authorised by Volkswagen AG. Volkswagen AG does not guarantee or accept any liability with respect to the correctness of information in this document. Copyright by Volkswagen AG.

satelettronica

Model engine output	Tyres	Tyre size	Wheel rim	Off-set in mm	Snow chains	Remarks
	Modification	215/55 R 16 93W	$6^1/_2$ J x 16 ⇒ page 563	42	No	
		205/55 R 16 91V	7 J x 16 ⇒ page 564	45	No	
		215/55 R 16 93W	7 J x 16 ⇒ page 564	45	No	
		235/45 R 17 94W	$7^1/_2$ J x 17 ⇒ page 566	47	No	
		235/40 R 18 95Y* ⇒ page 552	8 J x 18 ⇒ page 569	44	No	
	Winter tyres	205/55 R 16 91H/V	$6^1/_2$ J x 16 ⇒ page 563	42	Yes	
		205/50 R 17 93H/V	6 J x 17 ⇒ page 566	45	Yes	
3.2l 184 kW petrol engine	Standard tyres	235/45 R 17 94W	$7^1/_2$ J x 17 ⇒ page 566	47	No	
	Modification	235/40 R 18 95Y* ⇒ page 552	8 J x 18 ⇒ page 569	44	No	
	Winter tyres	205/50 R 17 93H/V	6 J x 17 ⇒ page 566	45	Yes	

Tyre inflation pressures are located on a sticker in the fuel tank flap or in ⇒ Maintenance ; Booklet ; Check tyres: condition, profile, inflation pressure, depth of tread .

Appendix for certificate statement 8106807121

The certificate statement can be found on the Volkswagen ServiceNet under Accessories/Tyres, Wheels and Tyres, Wheels and Tyres Guide.

Protected by copyright. Copyright for commercial purposes, in part or in whole, is not permitted unless authorised by Volkswagen AG. Volkswagen AG does not guarantee or accept any liability with respect to the correctness of information in this document. Copyright by Volkswagen AG.

satelettronica

Type Approval No.: e1*2001/116*0307*19

Overview

Model engine output	Tyres	Tyre size	Wheel rim	Off-set in mm	Snow chains	Remarks
1.6l 75 kW; 1.4l 90 kW petrol engines;	Standard tyres	205/55 R 16 91H	6 1/2 J x 16 ⇒ page 563	42	Yes	
2.0l 81 kW TDI; 2.0l 100 kW TDI; 2.0l 103 kW TDI diesel engines	Modification	215/55 R 16 93H/V	6 1/2 J x 16 ⇒ page 563	42	No	General information on: ◆ Winter tyres ⇒ page 15 ◆ Snow chains ⇒ page 18
2.0l 110 kW petrol engine, 4MOTION		205/55 R 16 91H/V	7 J x 16 ⇒ page 564	45	No	Tyre makes recommended by Volkswagen:
		215/55 R 16 93H/V	7 J x 16 ⇒ page 564	45	No	◆ Summer tyres ⇒ page 660 ◆ All-season tyres ⇒ page 674 ◆ Winter tyres ⇒ page 691
		235/45 R 17 94H/V	7 1/2 J x 17 ⇒ page 566	47	No	
		235/40 R 18 95Y* ⇒ page 556	8 J x 18 ⇒ page 569	44	No	◆ * 235/40 R 18 95Y tyres on 8 J x 18 rims with an offset of 44 are only possible if the specified conditions ⇒ page 569 are met!
	Winter tyres	205/55 R 16 91H/V	6 1/2 J x 16 ⇒ page 563	42	Yes	

Protected by copyright. Copying for private or commercial purposes, in part or in whole, is not permitted unless authorised by Volkswagen AG. Volkswagen AG does not guarantee or accept any liability with respect to the correctness of information in this document. ©copyright by Volkswagen AG.

satelettronica

Model engine output	Tyres	Tyre size	Wheel rim	Off-set in mm	Snow chains	Remarks
		205/50 R 17 93H/V	6 J x 17 ⇒ page 566	45	Yes	♦ 235/40 R 18 95W tyres on 8 J x 18 rims with an offset of 44 may be used instead of 235/40 R 18 95Y tyres on 8 J x 18 rims with an offset of 44. Observe authorisation by Kraftfahrt-Bundesamtes (German road traffic authority) "Authorisation of 95W tyres for Passat". This is located on the Volkswagen ServiceNet under Accessories/ Tyres, Wheels and Tyres, Wheels and Tyres Guide.
2.0l 105 kW TDI diesel engine	Standard tyres	205/55 R 16 91H	6 1/2 J x 16 ⇒ page 563	42	Yes	
	Modification	205/55 R 16 91H/V	7 J x 16 ⇒ page 564	45	No	
		205/50 R 17 93H/V	6 J x 17 ⇒ page 566	45	Yes	
		235/45 R 17 94H/V	7 1/2 J x 17 ⇒ page 566	47	No	
		235/40 R 18 95Y* ⇒ page 556	8 J x 18 ⇒ page 569	44	No	
	Winter tyres	205/55 R 16 91H/V	6 1/2 J x 16 ⇒ page 563	42	Yes	
		205/50 R 17 93H/V	6 J x 17 ⇒ page 566	45	Yes	
1.4l 110 kW EcoFuel	Standard tyres	205/55 R 16 91H	6 1/2 J x 16 ⇒ page 563	42	Yes	

Protected by copyright. Copying for private or commercial purposes, in part or in whole, is not permitted unless authorised by Volkswagen AG. Volkswagen AG does not guarantee or accept any liability with respect to the correctness of information in this document. Copyright by Volkswagen AG.
satelettronica

Model engine output	Tyres	Tyre size	Wheel rim	Off-set in mm	Snow chains	Remarks
	Modification	205/55 R 16 91H	7 J x 16 ⇒ page 564	45	No	
		205/50 R 17 93H	6 J x 17 ⇒ page 566	45	Yes	
		235/45 R 17 94H/V	7 1/2 J x 17 ⇒ page 566	47	No	
	Winter tyres	205/55 R 16 91H/V	6 1/2 J x 16 ⇒ page 563	42	Yes	
		205/50 R 17 93H/V	6 J x 17 ⇒ page 566	45	Yes	
1.8l 118 kW petrol engine	Standard tyres	205/55 R 16 91V	6 1/2 J x 16 ⇒ page 563	42	Yes	
2.0l 125 kW TDI diesel engines	Modification	215/55 R 16 93V	6 1/2 J x 16 ⇒ page 563	42	No	
		205/55 R 16 91V	7 J x 16 ⇒ page 564	45	No	
		215/55 R 16 93V	7 J x 16 ⇒ page 564	45	No	
		235/45 R 17 94V	7 1/2 J x 17 ⇒ page 566	47	No	
		235/40 R 18 95Y* ⇒ page 556	8 J x 18 ⇒ page 569	44	No	
	Winter tyres	205/55 R 16 91H/V	6 1/2 J x 16 ⇒ page 563	42	Yes	
		205/50 R 17 93H/V	6 J x 17 ⇒ page 566	45	Yes	
2.0l 147 kW petrol engine	Standard tyres	205/55 R 16 91V	6 1/2 J x 16 ⇒ page 563	42	Yes	

Copyright by Volkswagen AG. Volkswagen AG does not guarantee or accept any liability with respect to the correctness of information in this document. Copyright by Volkswagen AG. Reproduction, in part or in whole, is not permitted unless authorised by Volkswagen AG. Protected by copyright. Copying for private or commercial purposes, in part or in whole, is not permitted unless authorised by Volkswagen AG.
satelettronica

Model engine output	Tyres	Tyre size	Wheel rim	Off-set in mm	Snow chains	Remarks
	Modification	215/55 R 16 93W	$6^1/_2$ J x 16 ⇒ page 563	42	No	
		205/55 R 16 91V	7 J x 16 ⇒ page 564	45	No	
		215/55 R 16 93W	7 J x 16 ⇒ page 564	45	No	
		235/45 R 17 94W	$7^1/_2$ J x 17 ⇒ page 566	47	No	
		235/40 R 18 95Y* ⇒ page 556	8 J x 18 ⇒ page 569	44	No	
	Winter tyres	205/55 R 16 91H/V	$6^1/_2$ J x 16 ⇒ page 563	42	Yes	
		205/50 R 17 93H/V	6 J x 17 ⇒ page 566	45	Yes	
3.2l 184 kW petrol engine	Standard tyres	235/45 R 17 94W	$7^1/_2$ J x 17 ⇒ page 566	47	No	
	Modification	235/40 R 18 95Y* ⇒ page 556	8 J x 18 ⇒ page 569	44	No	
	Winter tyres	205/50 R 17 93H/V	6 J x 17 ⇒ page 566	45	Yes	

Tyre inflation pressures are located on a sticker in the fuel tank flap or in ⇒ Maintenance ; Booklet ; Check tyres: condition, profile, inflation pressure, depth of tread .

54.4 Passat Variant, type 3C model year 2010 to model year 2011

Appendix for certificate statement 8106807121

The certificate statement can be found on the Volkswagen ServiceNet under Accessories/Tyres, Wheels and Tyres, Wheels and Tyres Guide.

satelettronica

Type Approval No.: e1*2001/116*0307*20 to e1*2001/116*0307*23

Overview

Model engine output	Tyres	Tyre size	Wheel rim	Off-set in mm	Snow chains	Remarks
1.6l 75 kW; 1.4l 90 kW petrol engines;	Standard tyres	205/55 R 16 91H	6 1/2 J x 16 ⇒ page 563	42	Yes	
2.0l 81 kW TDI; 2.0l 100 kW TDI; 2.0l 103 kW TDI diesel engines	Modification	215/55 R 16 93H/V	6 1/2 J x 16 ⇒ page 563	42	No	General information on: ◆ Winter tyres ⇒ page 15 ◆ Snow chains ⇒ page 18
2.0l 110 kW petrol engine, 4MOTION		205/55 R 16 91H/V	7 J x 16 ⇒ page 564	45	No	Tyre makes recommended by Volkswagen:
		215/55 R 16 93H/V	7 J x 16 ⇒ page 564	45	No	◆ Summer tyres ⇒ page 660 ◆ All-season tyres ⇒ page 674 ◆ Winter tyres ⇒ page 691
		235/45 R 17 94H/V	7 1/2 J x 17 ⇒ page 566	47	No	
		235/40 R 18 95W* ⇒ page 560	8 J x 18 ⇒ page 569	44	No	* 235/40 R 18 95W tyres on 8 J x 18 rims with an offset of 44 rims are only possible if the specified conditions ⇒ page 569 are met!
	Winter tyres	205/55 R 16 91H/V	6 1/2 J x 16 ⇒ page 563	42	Yes	
		205/50 R 17 93H/V	6 J x 17 ⇒ page 566	45	Yes	
2.0l 105 kW TDI diesel engine	Standard tyres	205/55 R 16 91H	6 1/2 J x 16 ⇒ page 563	42	Yes	
	Modification	205/55 R 16 91H/V	7 J x 16 ⇒ page 564	45	No	

Volkswagen AG does not guarantee or accept any liability with respect to the correctness of information in this document. Copyright by Volkswagen AG. Protected by copyright. Copying for private or commercial purposes, in part or whole, is not permitted unless authorised by Volkswagen AG.

satelettronica

Model engine output	Tyres	Tyre size	Wheel rim	Off-set in mm	Snow chains	Remarks
		205/50 R 17 93H/V	6 J x 17 ⇒ page 566	45	Yes	
		235/45 R 17 94H/V	7 1/2 J x 17 ⇒ page 566	47	No	
		235/40 R 18 95W* ⇒ page 561	8 J x 18 ⇒ page 569	44	No	* 235/40 R 18 95W tyres on 8 J x 18 rims with an offset of 44 rims are only possible if the specified conditions ⇒ page 569 are met!
	Winter tyres	205/55 R 16 91H/V	6 1/2 J x 16 ⇒ page 563	42	Yes	
		205/50 R 17 93H/V	6 J x 17 ⇒ page 566	45	Yes	
1.4l 110 kW EcoFuel	Standard tyres	205/55 R 16 91H	6 1/2 J x 16 ⇒ page 563	42	Yes	
	Modification	205/55 R 16 91H/V	7 J x 16 ⇒ page 564	45	No	
		205/50 R 17 93H/V	6 J x 17 ⇒ page 566	45	Yes	
		235/45 R 17 94H/V	7 1/2 J x 17 ⇒ page 566	47	No	
	Winter tyres	205/55 R 16 91H/V	6 1/2 J x 16 ⇒ page 563	42	Yes	
		205/50 R 17 93H/V	6 J x 17 ⇒ page 566	45	Yes	
1.8l 118 kW petrol engine	Standard tyres	205/55 R 16 91V	6 1/2 J x 16 ⇒ page 563	42	Yes	
2.0l 125 kW TDI diesel engines	Modification	215/55 R 16 93V	6 1/2 J x 16 ⇒ page 563	42	No	

Protected by copyright. Copying for private or commercial purposes, in part or in whole, is not permitted unless authorised by Volkswagen AG. Volkswagen AG does not guarantee or accept any liability with respect to the correctness of information. Copyright by Volkswagen AG.

satelettronica

Model engine output	Tyres	Tyre size	Wheel rim	Off-set in mm	Snow chains	Remarks
		205/55 R 16 91V	7 J x 16 ⇒ page 564	45	No	
		215/55 R 16 93V	7 J x 16 ⇒ page 564	45	No	
		235/45 R 17 94V	7 1/2 J x 17 ⇒ page 566	47	No	
		235/40 R 18 95W* ⇒ page 562	8 J x 18 ⇒ page 569	44	No	* 235/40 R 18 95W tyres on 8 J x 18 rims with an offset of 44 rims are only possible if the specified conditions ⇒ page 569 are met!
	Winter tyres	205/55 R 16 91H/V	6 1/2 J x 16 ⇒ page 563	42	Yes	
		205/50 R 17 93H/V	6 J x 17 ⇒ page 566	45	Yes	
2.0l 147 kW petrol engine	Standard tyres	205/55 R 16 91V	6 1/2 J x 16 ⇒ page 563	42	Yes	
	Modification	215/55 R 16 93W	6 1/2 J x 16 ⇒ page 563	42	No	
		205/55 R 16 91V	7 J x 16 ⇒ page 564	45	No	
		215/55 R 16 93W	7 J x 16 ⇒ page 564	45	No	
		235/45 R 17 94W	7 1/2 J x 17 ⇒ page 566	47	No	
		235/40 R 18 95W* ⇒ page 562	8 J x 18 ⇒ page 569	44	No	* 235/40 R 18 95W tyres on 8 J x 18 rims with an offset of 44 rims are only possible if the specified conditions ⇒ page 569 are met!

Protected by copyright. Copyright by Volkswagen AG. Volkswagen AG does not guarantee or accept any liability with respect to the correctness of information in this document. Copyright by Volkswagen AG. Volkswagen AG. Copyright. Copying for private or commercial purposes, in part or in whole, is not permitted unless authorised by Volkswagen AG.

satelettronica

Model engine output	Tyres	Tyre size	Wheel rim	Off-set in mm	Snow chains	Remarks
	Winter tyres	205/55 R 16 91H/V	$6^1/_2$ J x 16 ⇒ page 563	42	Yes	
		205/50 R 17 93H/V	6 J x 17 ⇒ page 566	45	Yes	
3.2l 184 kW petrol engine	Standard tyres	235/45 R 17 94W	$7^1/_2$ J x 17 ⇒ page 566	47	No	
	Modification	235/40 R 18 95W* ⇒ page 563	8 J x 18 ⇒ page 569	44	No	* 235/40 R 18 95W tyres on 8 J x 18 rims with an offset of 44 rims are only possible if the specified conditions ⇒ page 569 are met!
	Winter tyres	205/50 R 17 93H/V	6 J x 17 ⇒ page 566	45	Yes	

Tyre inflation pressures are located on a sticker in the fuel tank flap or in ⇒ Maintenance ; Booklet ; Check tyres: condition, profile, inflation pressure, depth of tread .

54.5 Wheel allocation for Passat Variant, type 3C model year 2006 to model year 2011

Explanation of information on wheels ⇒ page 59

Torque settings for wheel bolts ⇒ Running gear, axles, steering; Rep. gr. 44 ; Torque settings for fitting wheels

Pitch circle diameter:	112 mm
Number of wheel bolt holes:	5

54.5.1 $6^1/_2$ J x 16

Caution

Observe the allocation of wheels and tyres to the respective engines, which are listed in the overview table ⇒ page 541 .

Protected by copyright. Copying for private or commercial purposes, in part or in whole, is not permitted unless authorised by Volkswagen AG. Volkswagen AG does not guarantee or accept any liability with respect to the correctness of information in this document. Copyright by Volkswagen AG.
satelettronica

Protected by copyright. Copying for private or commercial purposes, in part or in whole, is not permitted unless authorised by Volkswagen AG. Volkswagen AG does not guarantee or accept any liability with respect to the correctness of information in this document. Copyright by Volkswagen AG.

3C0 601 027 H - Wheel and tyre combination ⇒ page 541

Size:	$6^1/_2$ J x 16
Wheel offset in mm:	42
Wheel load in kg:	650

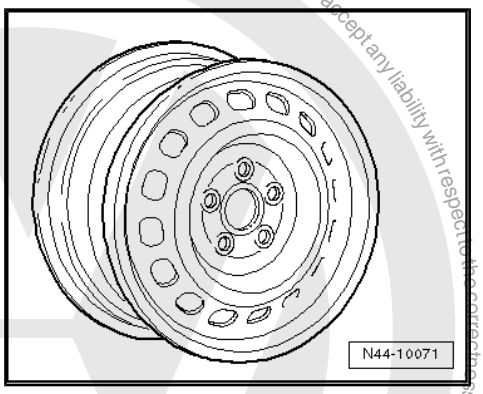

3C0 601 027 AA - Wheel and tyre combination ⇒ page 541

Size:	$6^1/_2$ J x 16
Wheel offset in mm:	42
Wheel load in kg:	650

Winter wheel

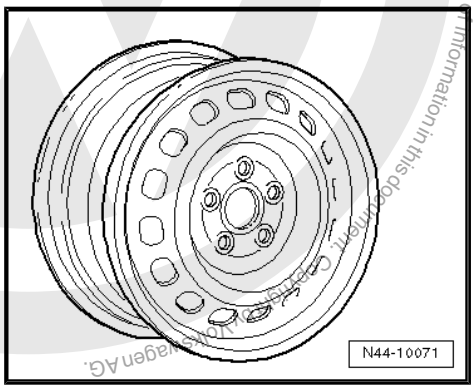

3C0 601 025 F - Wheel and tyre combination ⇒ page 541

Size:	$6^1/_2$ J x 16
Wheel offset in mm:	42
Wheel load in kg:	650

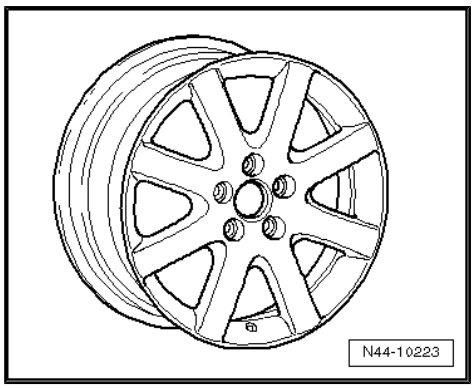

54.5.2 7 J x 16

Caution

Observe the allocation of wheels and tyres to the respective engines, which are listed in the overview table *⇒ page 541* *.*

3C0 601 025, 3C0 601 025 AD - Wheel and tyre combination ⇒ page 541

Size:	7 J x 16
Wheel offset in mm:	45
Wheel load in kg:	650

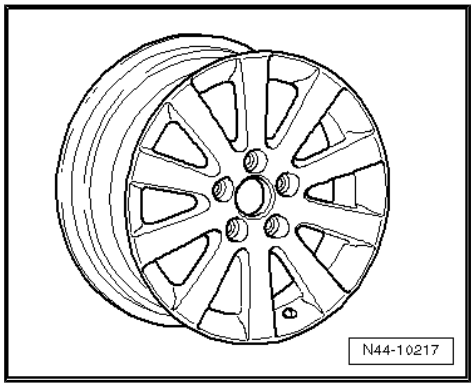

satelettronica

3C0 601 025 A - Wheel and tyre combination ⇒ page 541

Size:	7 J x 16
Wheel offset in mm:	45
Wheel load in kg:	650

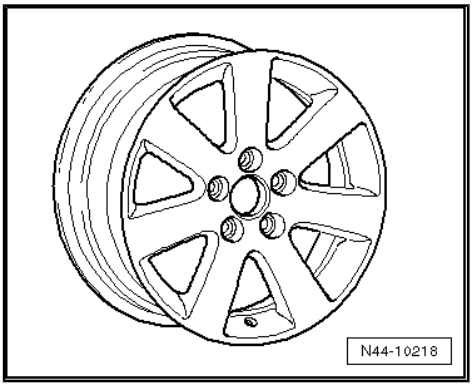

3C0 601 025 B - Wheel and tyre combination ⇒ page 541

Size:	7 J x 16
Wheel offset in mm:	45
Wheel load in kg:	650

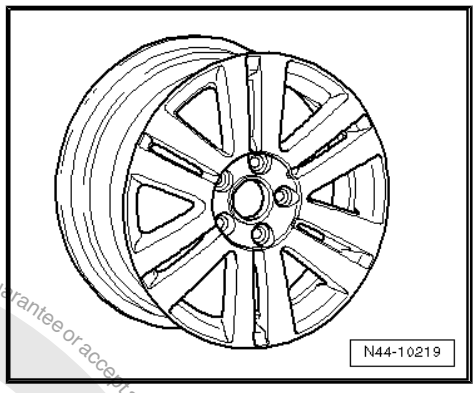

3C0 601 025 C - Wheel and tyre combination ⇒ page 541

Size:	7 J x 16 EH2 ⇒ page 59
Wheel offset in mm:	45
Wheel load in kg:	650

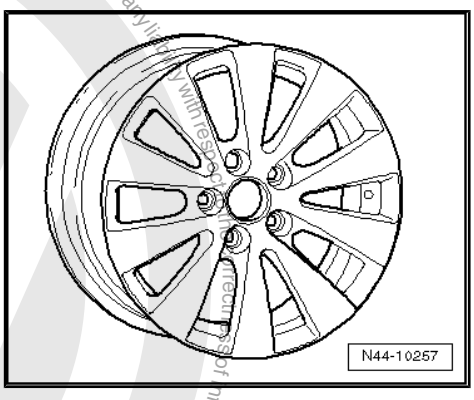

3C0 601 025 AE - Wheel and tyre combination ⇒ page 541

Size:	7 J x 16
Wheel offset in mm:	45
Wheel load in kg:	650

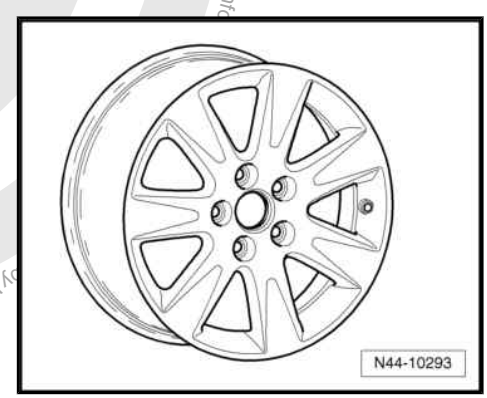

Protected by copyright. Copying for private or commercial purposes, in part or in whole, is not permitted unless authorised by Volkswagen AG. Volkswagen AG does not guarantee or accept any liability with respect to the correctness of information.
Copyright by Volkswagen AG.
satelettronica

3C0 601 025 AF - Wheel and tyre combination ⇒ page 541

Size:	7 J x 16
Wheel offset in mm:	45
Wheel load in kg:	650

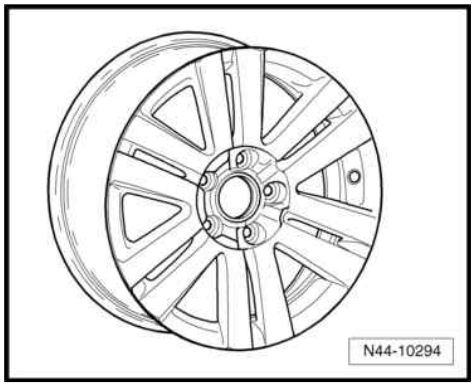

54.5.3 6 J x 17

Caution

Observe the allocation of wheels and tyres to the respective engines, which are listed in the overview table ⇒ page 541 *.*

Winter wheel

3C0 601 025 M - Wheel and tyre combination ⇒ page 542

Size:	6 J x 17
Wheel offset in mm:	45
Wheel load in kg:	650

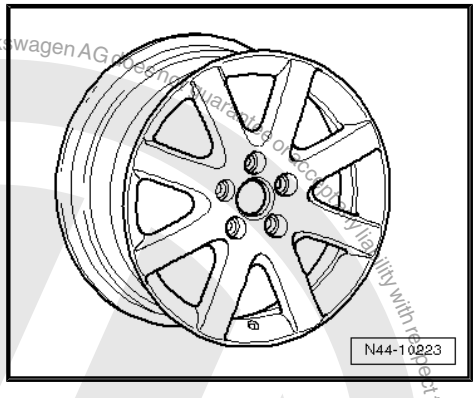

54.5.4 7 1/2 J x 17

Caution

Observe the allocation of wheels and tyres to the respective engines, which are listed in the overview table ⇒ page 541 *.*

3C0 601 025 AQ - Wheel and tyre combination ⇒ page 541

Size:	7 1/2 J x 17
Wheel offset in mm:	47
Wheel load in kg:	650

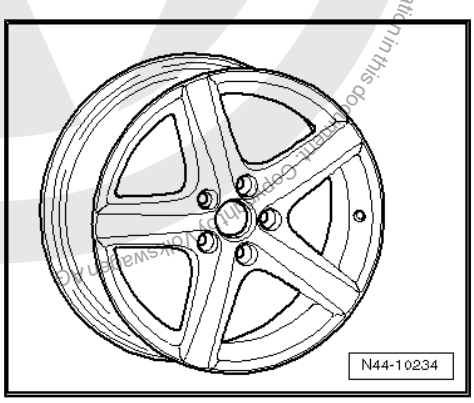

Protected by copyright. Copying for private or commercial purposes, in part or in whole, is not permitted unless authorised by Volkswagen AG. Volkswagen AG does not guarantee or accept any liability with respect to the correctness of information in this document. Copyright by Volkswagen AG.
satelettronica

3C0 601 025 BB - Wheel and tyre combination ⇒ page 541

Size:	$7^1/_2$ J x 17
Wheel offset in mm:	47
Wheel load in kg:	650

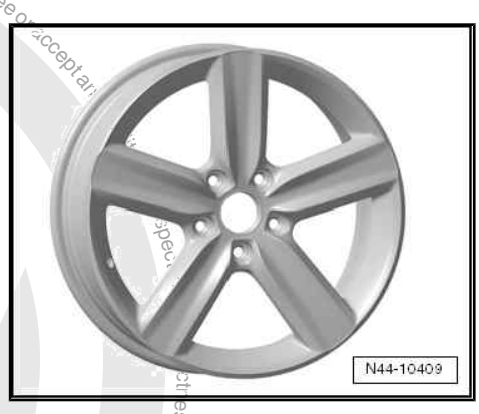

3C0 601 025 D - Wheel and tyre combination ⇒ page 541

Size:	$7^1/_2$ J x 17
Wheel offset in mm:	47
Wheel load in kg:	650

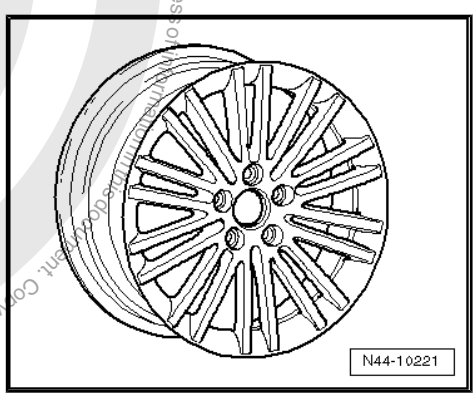

3C0 601 025 E - Wheel and tyre combination ⇒ page 541

Size:	$7^1/_2$ J x 17
Wheel offset in mm:	47
Wheel load in kg:	650

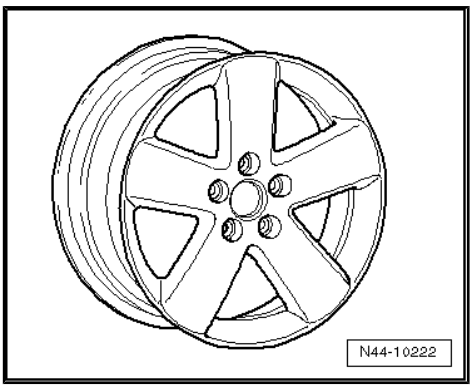

3C0 601 025 G - Wheel and tyre combination ⇒ page 541

Size:	$7^1/_2$ J x 17
Wheel offset in mm:	47
Wheel load in kg:	650

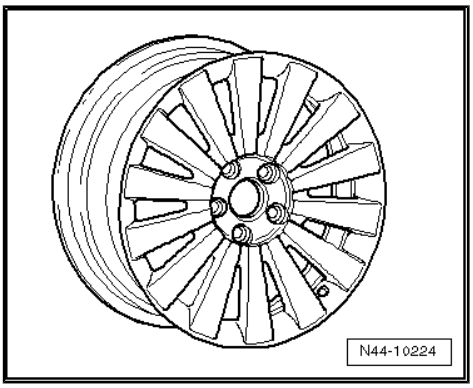

Protected by copyright. Copying for private and commercial purposes, in part or in whole, is not permitted unless authorised by Volkswagen AG. Volkswagen AG does not guarantee or accept any liability with respect to the correctness of information in this document. Copyright by Volkswagen AG.
satelettronica

3C0 601 025 J - Wheel and tyre combination ⇒ page 541

Size:	$7^1/_2$ J x 17
Wheel offset in mm:	47
Wheel load in kg:	650

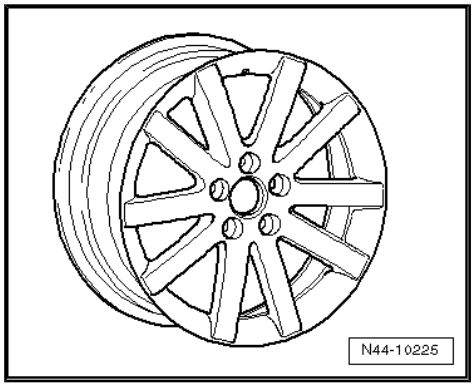

3C0 601 025 K - Wheel and tyre combination ⇒ page 541

Size:	$7^1/_2$ J x 17
Wheel offset in mm:	47
Wheel load in kg:	650

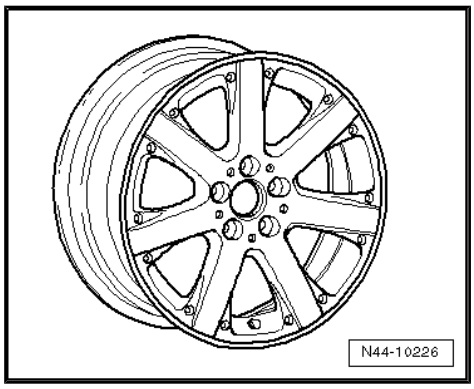

3C0 601 025 R - Wheel and tyre combination ⇒ page 541

Size:	$7^1/_2$ J x 17
Wheel offset in mm:	47
Wheel load in kg:	650

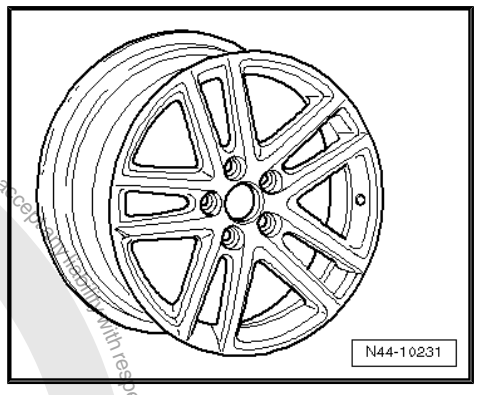

3C0 601 025 S - Wheel and tyre combination ⇒ page 541

Size:	$7^1/_2$ J x 17
Wheel offset in mm:	47
Wheel load in kg:	650

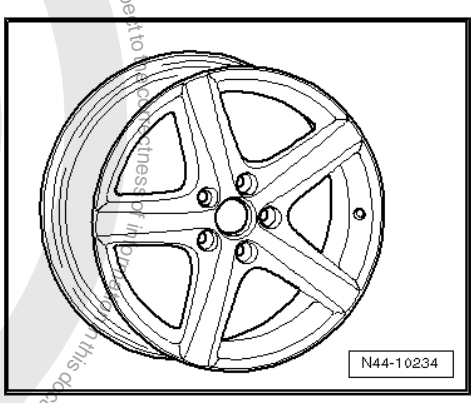

Protected by copyright. Copying for private or commercial purposes, in part or whole, is not permitted unless authorised by Volkswagen AG. Volkswagen AG does not guarantee or accept any liability with respect to the correctness of information in this document. Copyright by Volkswagen AG.
satelettronica

3C0 601 025 AJ - Wheel and tyre combination ⇒ page 541

Size:	$7^1/_2$ J x 17
Wheel offset in mm:	47
Wheel load in kg:	650

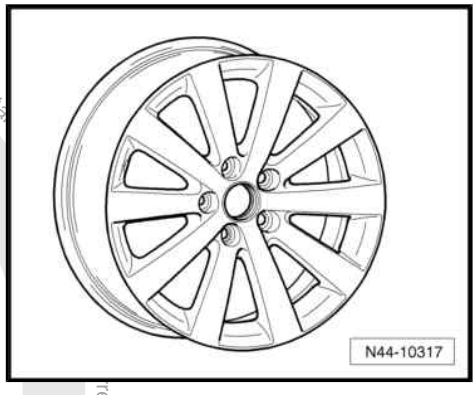

54.5.5 8 J x 18

Caution

Observe the allocation of wheels and tyres to the respective engines, which are listed in the overview table *⇒ page 541* *.*

Caution

8 J x 18 wheels can only be fitted under the following conditions:

- *The vehicle must be fitted with the sport suspension for 18″ wheels. The respective PR number and alignment specifications for the suspension can be found here: ⇒ Running gear, axles, steering; Rep. gr. 44 ; Wheel alignment; Specifications for wheel alignment .*
- *The camber on the rear axle must be -1°45'.*
- *Also, wider wheel arches* *⇒ page 4* *must be installed ⇒ Electronic Parts Catalogue "ETKA" .*

3C0 601 025 AA - Wheel and tyre combination ⇒ page 541

Size:	8 J x 18
Wheel offset in mm:	44
Wheel load in kg:	650

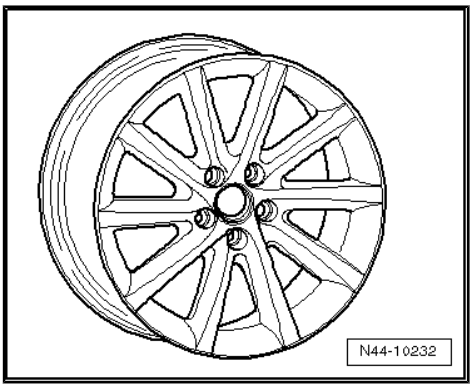

satelettronica

3C0 601 025 AB, 3C0 601 025 AP - Wheel and tyre combination
⇒ page 541

Size:	8 J x 18
Wheel offset in mm:	44
Wheel load in kg:	650

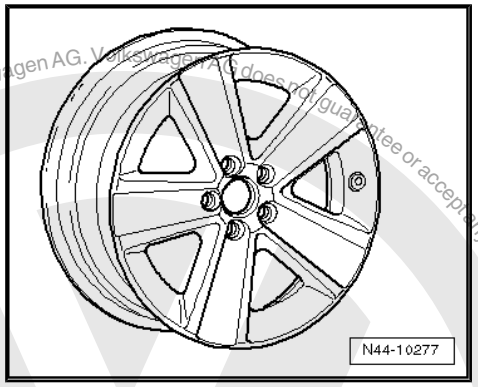

3C0 601 025 AC - Wheel and tyre combination
⇒ page 541

Size:	8 J x 18
Wheel offset in mm:	44
Wheel load in kg:	650

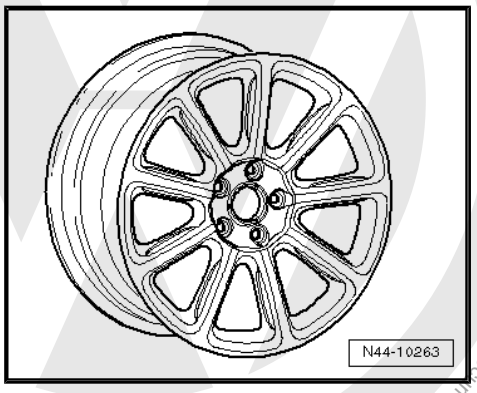

3C0 601 025 T, 3C0 601 025 AN - Wheel and tyre combination
⇒ page 541

Size:	8 J x 18
Wheel offset in mm:	44
Wheel load in kg:	650

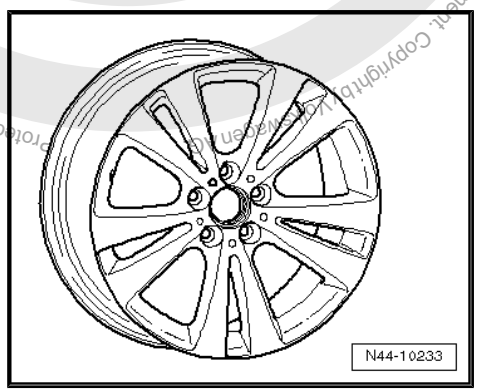

3C0 601 025 AG - Wheel and tyre combination
⇒ page 541

Size:	8 J x 18
Wheel offset in mm:	44
Wheel load in kg:	650

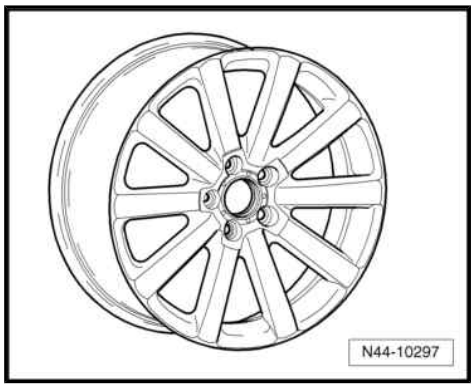

Protected by copyright. Copyright by Volkswagen AG. Volkswagen AG does not guarantee or accept any liability with respect to the correctness of information in this document. Copyright by Volkswagen AG, Volkswagen AG does not guarantee or accept any liability with respect to the correctness of information in this document. Copyright by Volkswagen AG. Copying for private or commercial purposes, in part or in whole, is not permitted unless authorised by Volkswagen AG.
satelettronica

3C0 601 025 BA - Wheel and tyre combination ⇒ page 541

Size:	8 J x 18
Wheel offset in mm:	44
Wheel load in kg:	650

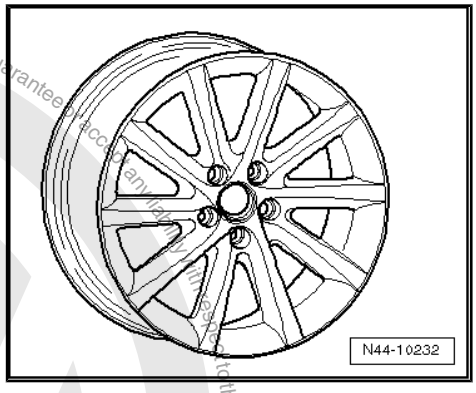

Protected by copyright. Copying for private or commercial purposes, in part or in whole, is not permitted unless authorised by Volkswagen AG. Volkswagen AG does not guarantee or accept any liability with respect to the correctness of information in this document. Copyright by Volkswagen AG.
satelettronica

55 Passat Variant BlueMotion from model year 2008

General

Volkswagen vehicles are built according to the latest findings in safety engineering. To keep it that way, we recommend the use of only genuine Volkswagen spare parts. You can recognise this by the VW Audi logo and by the part number. It has been established that these parts are reliable, safe and suitable.

Despite constant appraisal of the market, we cannot assess other products on these points, even when in isolated cases they have been passed by official inspectors or have been granted official approval. Therefore, we cannot, of course, assume any liability if these products are installed.

> ⚠ **WARNING**
>
> *The products from Volkswagen genuine parts and Votex genuine accessories may differ in fitting requirements, torque specifications and so on.*
>
> *Always follow the respective fitting and operating instructions.*

The wheel and tyre combinations or changes listed in the vehicle tables refer exclusively to Volkswagen Genuine wheels. Approval of wheel and tyre combinations or a change to wheels from the accessories trade is not possible with the certificate statement attached here.

> ⚠ **WARNING**
>
> *The fitting instructions and torque specifications for wheels from Votex genuine accessories may differ from those intended for wheels from Volkswagen genuine parts.*
>
> *Therefore, always observe the torque settings for the wheel bolts as well as the respective fitting and operating instructions.*

55.1 Passat Variant BlueMotion, type 3C model year 2008 to model year 2009

Appendix for certificate statement 8106807121

The certificate statement can be found on the Volkswagen ServiceNet under Accessories/Tyres, Wheels and Tyres, Wheels and Tyres Guide.

Type Approval No.: e1*2001/116*0307*13 to e1*2001/116*0307*19

Overview

Model engine output	Tyres	Tyre size	Wheel rim	Off-set in mm	Snow chains	Remarks
1.9l 77 kW TDI; diesel engine	Standard tyres	205/55 R 16 91H	$6^1/_2$ J x 16 ⇒ page 575	42	Yes	General information on: ◆ Winter tyres ⇒ page 15 ◆ Snow chains ⇒ page 18

Protected by copyright. Copyright by Volkswagen AG. Volkswagen AG does not guarantee or accept any liability with respect to the correctness of information in this document. Copyright by Volkswagen AG. Volkswagen AG does not guarantee or accept any liability with respect to the correctness of information in this document. Copyright by Volkswagen AG. Volkswagen AG does not guarantee or accept any liability with respect to the correctness of information in this document. Copyright by Volkswagen AG. Volkswagen AG does not guarantee or accept any liability with respect to the correctness of information in this document. Copyright by Volkswagen AG. Volkswagen AG does not guarantee or accept any liability with respect to the correctness of information in this document. Copyright by Volkswagen AG. Volkswagen AG does not guarantee or accept any liability with respect to the correctness of information in this document. Copyright by Volkswagen AG. Volkswagen AG does not guarantee or accept any liability with respect to the correctness of information in this document. Copyright by Volkswagen AG. Volkswagen AG does not guarantee or accept any liability with respect to the correctness of information in this document. Copyright by Volkswagen AG. Volkswagen AG does not guarantee or accept any liability with respect to the correctness of information in this document. Copyright by Volkswagen AG.
satelettronica

Model engine output	Tyres	Tyre size	Wheel rim	Off-set in mm	Snow chains	Remarks
	Modification	205/55 R 16 91H/V	7 J x 16 ⇒ page 576	45	No	Tyre makes recommended by Volkswagen: ◆ Summer tyres ⇒ page 663 ◆ All-season tyres ⇒ page 674 ◆ Winter tyres ⇒ page 693
	Winter tyres	205/55 R 16 91H/V	6 1/2 J x 16 ⇒ page 575	42	Yes	
2.0l 81 kW TDI diesel engine	Standard tyres	205/55 R 16 91H	6 1/2 J x 16 ⇒ page 575	42	Yes	
	Modification	205/55 R 16 91H/V	7 J x 16 ⇒ page 576	45	No	
		205/50 R 17 93H/V	6 J x 17 ⇒ page 578	45	Yes	
		235/45 R 17 94H/V	7 1/2 J x 17 ⇒ page 578	47	No	
		235/40 R 18 95Y* ⇒ page 573	8 J x 18 ⇒ page 581	44	No	◆ * 235/40 R 18 95Y tyres on 8 J x 18 rims with an offset of 44 are only possible if the specified conditions ⇒ page 581 are met! ◆ 235/40 R 18 95W tyres on 8 J x 18 rims with an offset of 44 may be used instead of 235/40 R 18 95Y tyres on 8 J x 18 rims with an offset of 44. Observe authorisation by Kraftfahrt-Bundesamtes (German road traffic authority) “Authorisation of 95W tyres for Passat”. This is located on the Volkswagen ServiceNet under Accessories/ Tyres, Wheels and Tyres, Wheels and Tyres Guide.
	Winter tyres	205/55 R 16 91H/V	6 1/2 J x 16 ⇒ page 575	42	Yes	

Volkswagen AG. Volkswagen AG does not guarantee or assume any liability with respect to the correctness of information in this document. Copyright by Volkswagen AG. Protected by copyright. Copying for private or commercial purposes, in part or in whole, is not permitted unless authorised by Volkswagen AG.

satelettronica

Model engine output	Tyres	Tyre size	Wheel rim	Off-set in mm	Snow chains	Remarks
		205/50 R 17 93H/V	6 J x 17 ⇒ page 578	45	Yes	

Tyre inflation pressures are located on a sticker in the fuel tank flap or in ⇒ Maintenance ; Booklet ; Check tyres: condition, profile, inflation pressure, depth of tread .

55.2 Passat Variant BlueMotion, type 3C model year 2010 to model year 2011

Appendix for certificate statement 8106807121

The certificate statement can be found on the Volkswagen ServiceNet under Accessories/Tyres, Wheels and Tyres, Wheels and Tyres Guide.

Type Approval No.: e1*2001/116*0307*20 to e1*2001/116*0307*23

Overview

Model engine output	Tyres	Tyre size	Wheel rim	Off-set in mm	Snow chains	Remarks
1.4l 90 kW petrol engine	Standard tyres	205/55 R 16 91H	6 1/2 J x 16 ⇒ page 575	42	Yes	General information on: ♦ Winter tyres ⇒ page 15 ♦ Snow chains ⇒ page 18
1.6l 77 kW TDI; 2.0l 81 kW TDI; 2.0l 103 kW TDI diesel engine	Modification	205/55 R 16 91H/V	7 J x 16 ⇒ page 576	45	No	Tyre makes recommended by Volkswagen:

Protected by copyright. Copyright by Volkswagen AG.
Copying for private or commercial purposes, in part or in whole, is not permitted unless authorised by Volkswagen AG. Volkswagen AG does not guarantee or accept any liability with respect to the correctness of information in this document.

satelettronica

Model engine output	Tyres	Tyre size	Wheel rim	Off-set in mm	Snow chains	Remarks
		205/50 R 17 93H/V	6 J x 17 ⇒ page 578	45	Yes	◆ Summer tyres ⇒ page 663 ◆ All-season tyres ⇒ page 674 ◆ Winter tyres ⇒ page 693
		235/45 R 17 94H/V	7 1/2 J x 17 ⇒ page 578	47	No	
		235/40 R 18 95W* ⇒ page 575	8 J x 18 ⇒ page 581	44	No	* 235/40 R 18 95W tyres on 8 J x 18 rims with an offset of 44 rims are only possible if the specified conditions ⇒ page 581 are met!
	Winter tyres	205/55 R 16 91H/V	6 1/2 J x 16 ⇒ page 575	42	Yes	
		205/50 R 17 93H/V	6 J x 17 ⇒ page 578	45	Yes	

Tyre inflation pressures are located on a sticker in the fuel tank flap or in ⇒ Maintenance ; Booklet ; Check tyres: condition, profile, inflation pressure, depth of tread .

55.3 Wheel allocation for Passat Variant BlueMotion, type 3C model year 2008 to model year 2011

Explanation of information on wheels ⇒ page 59

Torque settings for wheel bolts ⇒ Running gear, axles, steering; Rep. gr. 44 ; Torque settings for fitting wheels

Pitch circle diameter:	112 mm
Number of wheel bolt holes:	5

55.3.1 6 1/2 J x 16

Caution

Observe the allocation of wheels and tyres to the respective engines, which are listed in the overview table ⇒ page 572 .

Copyright by Volkswagen AG. Volkswagen AG does not guarantee or accept any liability with respect to the correctness of information in this document. Copying for private or commercial purposes, in part or in whole, is not permitted unless authorised by Volkswagen AG.

satelettronica

3C0 601 027 H - Wheel and tyre combination ⇒ page 572

Size:	$6^1/_2$ J x 16
Wheel offset in mm:	42
Wheel load in kg:	650

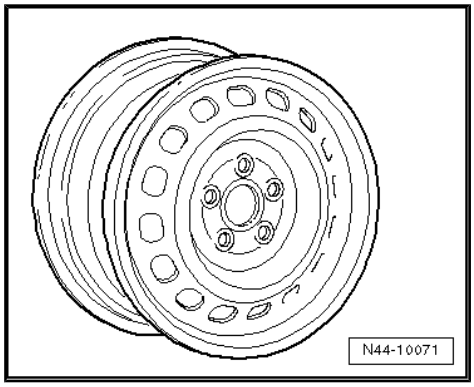

3C0 601 027 AA - Wheel and tyre combination ⇒ page 572

Size:	$6^1/_2$ J x 16
Wheel offset in mm:	42
Wheel load in kg:	650

Winter wheel

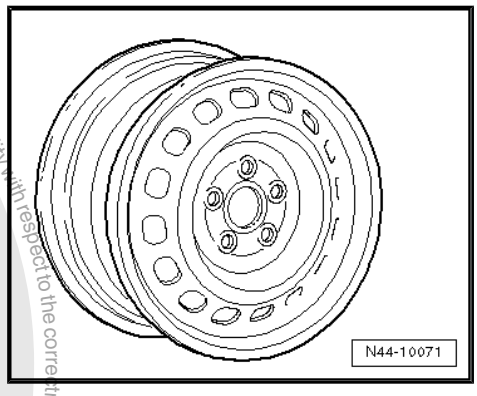

3C0 601 025 F - Wheel and tyre combination ⇒ page 572

Size:	$6^1/_2$ J x 16
Wheel offset in mm:	42
Wheel load in kg:	650

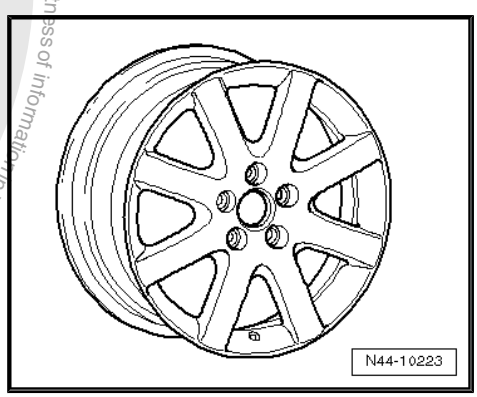

55.3.2 7 J x 16

Caution

Observe the allocation of wheels and tyres to the respective engines, which are listed in the overview table *⇒ page 572* *.*

3C0 601 025, 3C0 601 025 AD - Wheel and tyre combination ⇒ page 573

Size:	7 J x 16
Wheel offset in mm:	45
Wheel load in kg:	650

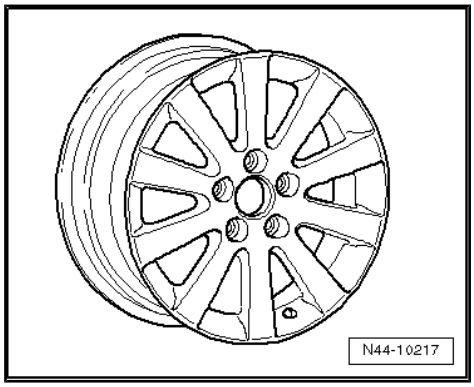

Protected by copyright. Copyright for private or commercial purposes, in part or in whole is not permitted unless authorised by Volkswagen AG. Volkswagen AG does not guarantee or accept any liability with respect to the correctness of information in this document. Copyright by Volkswagen AG.
satelettronica

3C0 601 025 A - Wheel and tyre combination ⇒ page 573

Size:	7 J x 16
Wheel offset in mm:	45
Wheel load in kg:	650

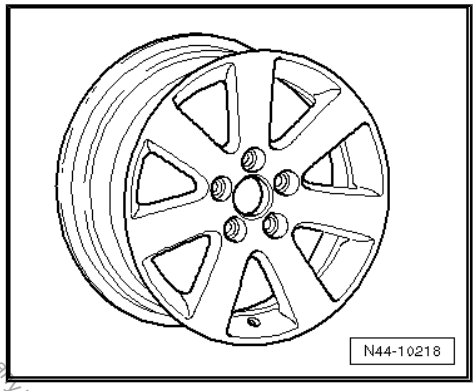

3C0 601 025 B - Wheel and tyre combination ⇒ page 573

Size:	7 J x 16
Wheel offset in mm:	45
Wheel load in kg:	650

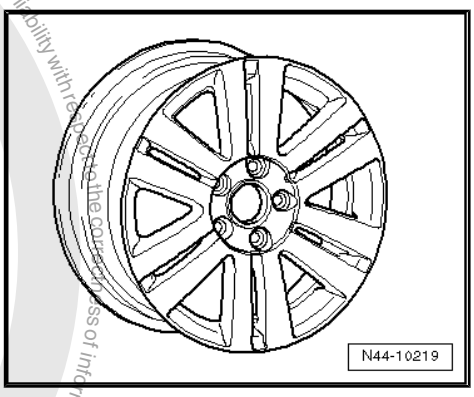

3C0 601 025 C - Wheel and tyre combination ⇒ page 573

Size:	7 J x 16 EH2 ⇒ page 59
Wheel offset in mm:	45
Wheel load in kg:	650

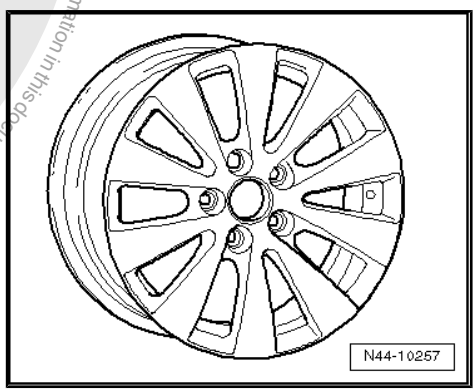

3C0 601 025 AE - Wheel and tyre combination ⇒ page 573

Size:	7 J x 16
Wheel offset in mm:	45
Wheel load in kg:	650

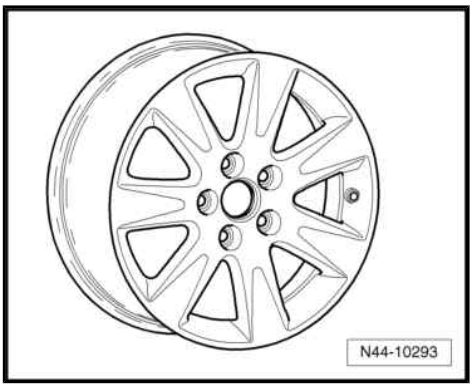

Protected by copyright. Copying for private or commercial purposes, in part or in whole, is not permitted unless authorised by Volkswagen AG. Volkswagen AG does not guarantee or accept any liability with respect to the correctness of information in this document. Copyright by Volkswagen AG.
satelettronica

3C0 601 025 AF - Wheel and tyre combination ⇒ page 573

Size:	7 J x 16
Wheel offset in mm:	45
Wheel load in kg:	650

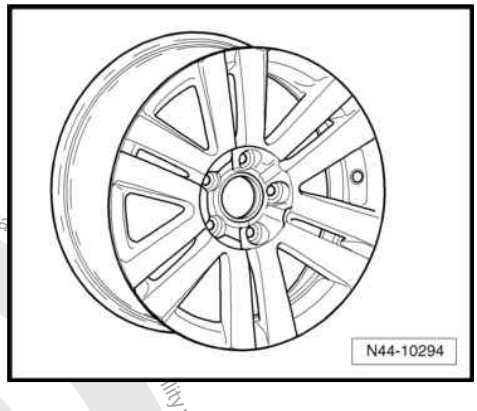

55.3.3 6 J x 17

> ⚠ **Caution**
>
> *Observe the allocation of wheels and tyres to the respective engines, which are listed in the overview table* ⇒ page 572 *.*

Winter wheel

3C0 601 025 M - Wheel and tyre combination ⇒ page 573

Size:	6 J x 17
Wheel offset in mm:	45
Wheel load in kg:	650

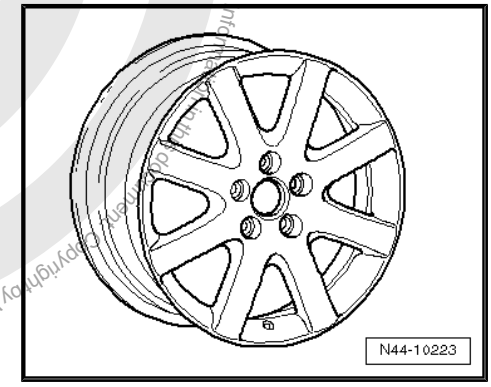

55.3.4 7 1/2 J x 17

> ⚠ **Caution**
>
> *Observe the allocation of wheels and tyres to the respective engines, which are listed in the overview table* ⇒ page 572 *.*

3C0 601 025 AQ - Wheel and tyre combination ⇒ page 573

Size:	7 1/2 J x 17
Wheel offset in mm:	47
Wheel load in kg:	650

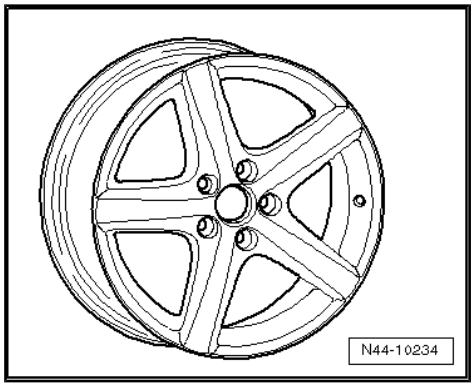

Protected by copyright. Copying for private and commercial purposes, in part or in whole, is not permitted unless authorised by Volkswagen AG. Volkswagen AG does not guarantee or accept any liability with respect to the correctness of information. Copyright by Volkswagen AG.

satelettronica

3C0 601 025 BB - Wheel and tyre combination ⇒ page 573

Size:	$7^1/_2$ J x 17
Wheel offset in mm:	47
Wheel load in kg:	650

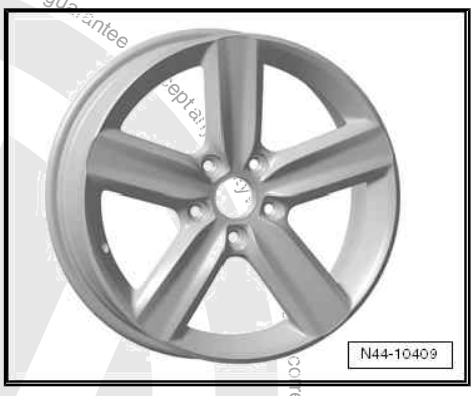

3C0 601 025 D - Wheel and tyre combination ⇒ page 573

Size:	$7^1/_2$ J x 17
Wheel offset in mm:	47
Wheel load in kg:	650

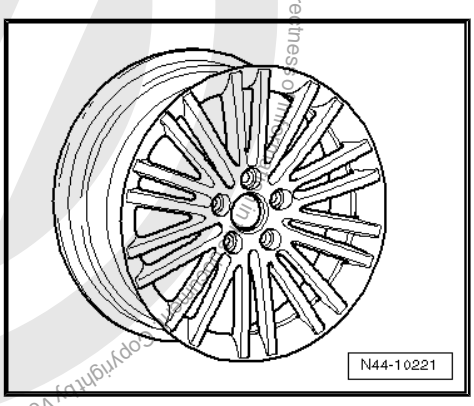

3C0 601 025 E - Wheel and tyre combination ⇒ page 573

Size:	$7^1/_2$ J x 17
Wheel offset in mm:	47
Wheel load in kg:	650

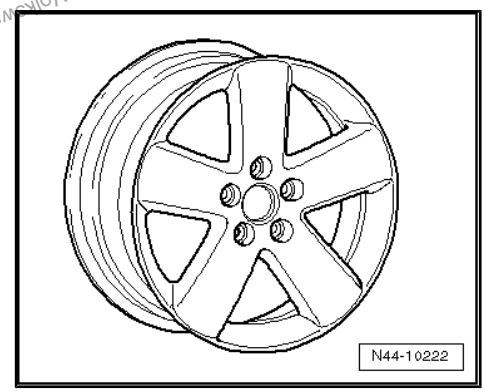

3C0 601 025 G - Wheel and tyre combination ⇒ page 573

Size:	$7^1/_2$ J x 17
Wheel offset in mm:	47
Wheel load in kg:	650

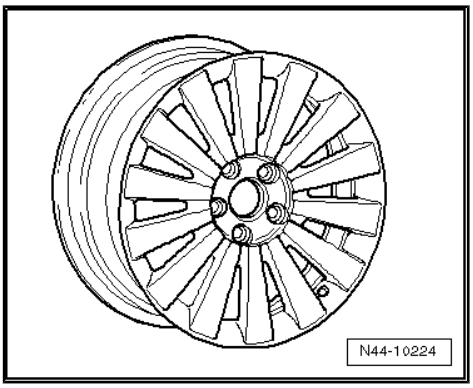

satelettronica

3C0 601 025 J - Wheel and tyre combination ⇒ page 573

Size:	$7^1/_2$ J x 17
Wheel offset in mm:	47
Wheel load in kg:	650

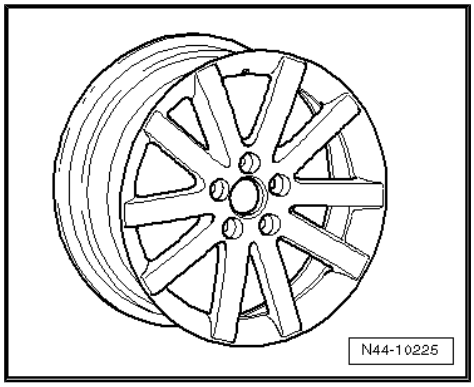

3C0 601 025 K - Wheel and tyre combination ⇒ page 573

Size:	$7^1/_2$ J x 17
Wheel offset in mm:	47
Wheel load in kg:	650

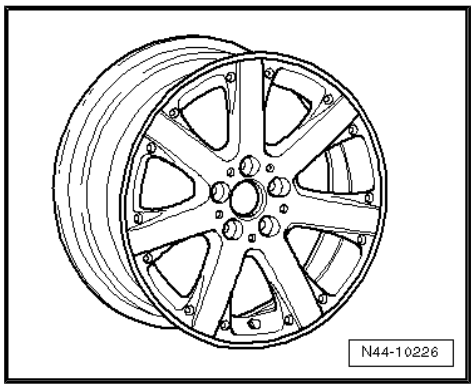

3C0 601 025 R - Wheel and tyre combination ⇒ page 573

Size:	$7^1/_2$ J x 17
Wheel offset in mm:	47
Wheel load in kg:	650

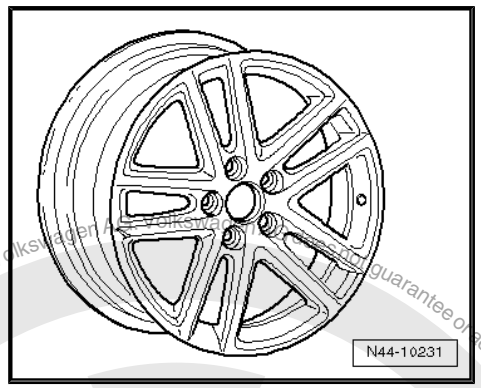

3C0 601 025 S - Wheel and tyre combination ⇒ page 573

Size:	$7^1/_2$ J x 17
Wheel offset in mm:	47
Wheel load in kg:	650

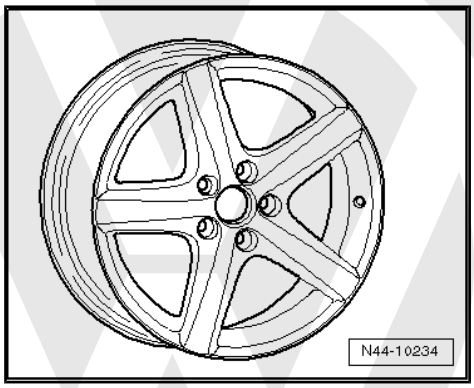

Protected by copyright. Copying for private or commercial purposes, in part or in whole, is not permitted unless authorised by Volkswagen AG. Copyright by Volkswagen AG. No guarantee or accept any liability with respect to the correctness of information in this document.
satelettronica

3C0 601 025 AJ - Wheel and tyre combination ⇒ page 573

Size:	7 1/2 J x 17
Wheel offset in mm:	47
Wheel load in kg:	650

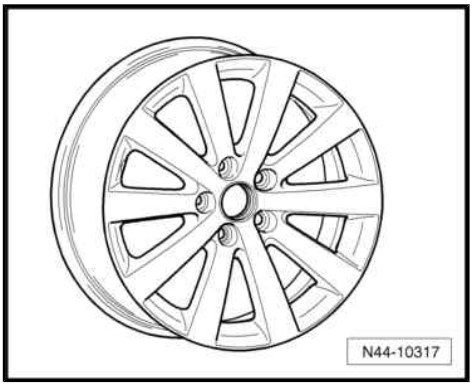

55.3.5 8 J x 18

Caution

Observe the allocation of wheels and tyres to the respective engines, which are listed in the overview table *⇒ page 572* *.*

Caution

8 J x 18 wheels can only be fitted under the following conditions:

- *The vehicle must be fitted with the sport suspension for 18" wheels. The respective PR number and alignment specifications for the suspension can be found here: ⇒ Running gear, axles, steering; Rep. gr. 44 ; Wheel alignment; Specifications for wheel alignment .*
- *The camber on the rear axle must be -1°45'.*
- *Also, wider wheel arches* *⇒ page 4* *must be installed ⇒ Electronic Parts Catalogue "ETKA" .*

3C0 601 025 AA - Wheel and tyre combination ⇒ page 573

Size:	8 J x 18
Wheel offset in mm:	44
Wheel load in kg:	650

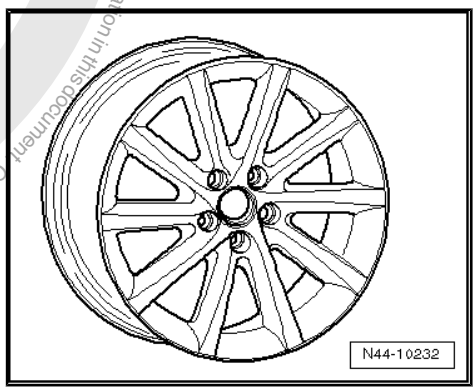

Protected by copyright. Copyright by Volkswagen AG.
Copyright by Volkswagen AG. Volkswagen AG does not guarantee or accept any liability with respect to the correctness of information in this document.
satelettronica

3C0 601 025 AB, 3C0 601 025 AP - Wheel and tyre combination
⇒ page 573

Size:	8 J x 18
Wheel offset in mm:	44
Wheel load in kg:	650

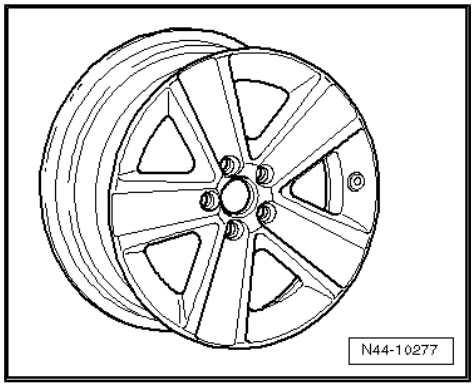

3C0 601 025 AC - Wheel and tyre combination ⇒ page 573

Size:	8 J x 18
Wheel offset in mm:	44
Wheel load in kg:	650

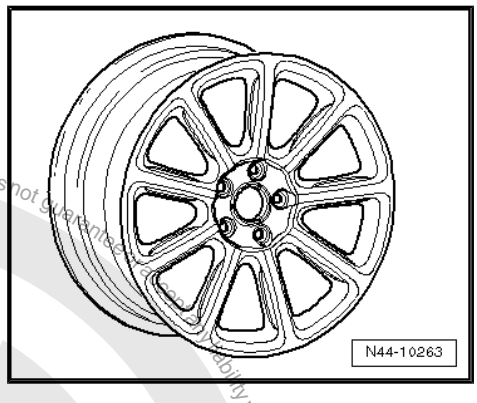

3C0 601 025 T, 3C0 601 025 AN - Wheel and tyre combination
⇒ page 573

Size:	8 J x 18
Wheel offset in mm:	44
Wheel load in kg:	650

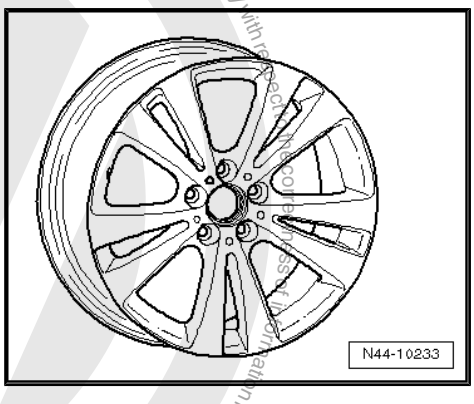

3C0 601 025 AG - Wheel and tyre combination ⇒ page 573

Size:	8 J x 18
Wheel offset in mm:	44
Wheel load in kg:	650

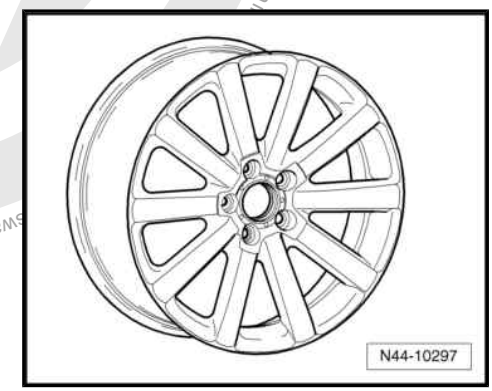

Protected by copyright. Copying for private or commercial purposes, in part or in whole, is not permitted unless authorised by Volkswagen AG. Volkswagen AG does not guarantee or assume any liability with respect to the correctness of information.
satelettronica

3C0 601 025 BA - Wheel and tyre combination ⇒ page 573

Size:	8 J x 18
Wheel offset in mm:	44
Wheel load in kg:	650

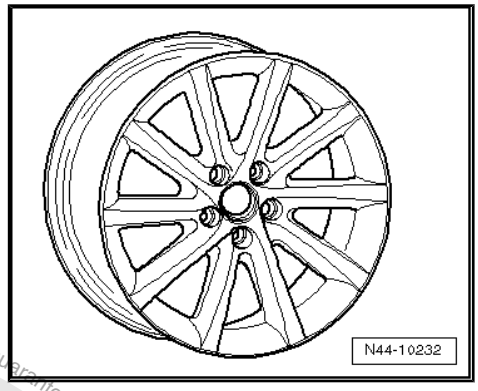

Protected by copyright. Copying for private or commercial purposes, in part or in whole, is not permitted unless authorised by Volkswagen AG. Volkswagen AG does not guarantee or accept any liability with respect to the correctness of information in this document. Copyright by Volkswagen AG.

satelettronica

56 Passat R36 from model year 2008

General

Volkswagen vehicles are built according to the latest findings in safety engineering. To keep it that way, we recommend the use of only genuine Volkswagen spare parts. You can recognise this by the VW Audi logo and by the part number. It has been established that these parts are reliable, safe and suitable.

Despite constant appraisal of the market, we cannot assess other products on these points, even when in isolated cases they have been passed by official inspectors or have been granted official approval. Therefore, we cannot, of course, assume any liability if these products are installed.

WARNING

The products from Volkswagen genuine parts and Votex genuine accessories may differ in fitting requirements, torque specifications and so on.

Always follow the respective fitting and operating instructions.

The wheel and tyre combinations or changes listed in the vehicle tables refer exclusively to Volkswagen Genuine wheels. Approval of wheel and tyre combinations or a change to wheels from the accessories trade is not possible with the certificate statement attached here.

WARNING

The fitting instructions and torque specifications for wheels from Votex genuine accessories may differ from those intended for wheels from Volkswagen genuine parts.

Therefore, always observe the torque settings for the wheel bolts as well as the respective fitting and operating instructions.

56.1 Passat R36, type 3C model year 2008 to model year 2009

Appendix for certificate statement 8106807121

The certificate statement can be found on the Volkswagen ServiceNet under Accessories/Tyres, Wheels and Tyres, Wheels and Tyres Guide.

Type Approval No.: e1*2001/116*0307*13 to e1*2001/116*0307*19

Overview

Model engine output	Tyres	Tyre size	Wheel rim	Off-set in mm	Snow chains	Remarks
3.6l V6 220 kW; petrol engine	Standard tyres	235/40 R 18 95Y* ⇒ page 585	8 J x 18 ⇒ page 590	44	No	General information on: ◆ Winter tyres ⇒ page 15 ◆ Snow chains ⇒ page 18

Protected by copyright. Copyright by Volkswagen AG. Copying for private or commercial purposes, in part or in whole, is not permitted unless authorised by Volkswagen AG. Volkswagen AG does not guarantee or accept any liability with respect to the correctness of information in this document.
satelettronica

Model engine output	Tyres	Tyre size	Wheel rim	Off-set in mm	Snow chains	Remarks
	Modification	235/45 R 17 94W	$7^1/_2$ J x 17 ⇒ page 587	47	No	Tyre makes recommended by Volkswagen: ◆ Summer tyres ⇒ page 664 ◆ All-season tyres ⇒ page 675 ◆ Winter tyres ⇒ page 693
	Winter tyres	205/50 R 17 93H/V	6 J x 17 ⇒ page 587	45	Yes	◆ 235/40 R 18 95W tyres on 8 J x 18 rims with an offset of 44 may be used instead of 235/40 R 18 95Y tyres on 8 J x 18 rims with an offset of 44. Observe authorisation by Kraftfahrt-Bundesamtes (German road traffic authority) "Authorisation of 95W tyres for Passat". This is located on the Volkswagen ServiceNet under Accessories/ Tyres, Wheels and Tyres, Wheels and Tyres Guide.
3.6l V6 220 kW; petrol engine	Standard tyres	235/35 R 19 91Y** ⇒ page 585	8 J x 19 ⇒ page 591	44	No	** 235/35 R 19 91Y tyres on 8 J x 19 rims with an offset of 44 are only possible if the specified conditions ⇒ page 592 are met!
	Modification	235/45 R 17 94W	$7^1/_2$ J x 17 ⇒ page 587	47	No	
		235/40 R 18 95Y	8 J x 18 ⇒ page 590	44	No	
	Winter tyres	205/50 R 17 93H/V	6 J x 17 ⇒ page 587	45	Yes	

Tyre inflation pressures are located on a sticker in the fuel tank flap or in ⇒ Maintenance ; Booklet ; Check tyres: condition, profile, inflation pressure, depth of tread .

Protected by copyright. Copying for private or commercial purposes, in part or in whole, is not permitted unless authorised by Volkswagen AG. Volkswagen AG does not guarantee or accept any liability with respect to the correctness of information in this document. Copyright by Volkswagen AG.

satelettronica

56.2 Passat R36, type 3C model year 2010 to model year 2011

Appendix for certificate statement 8106807121

The certificate statement can be found on the Volkswagen ServiceNet under Accessories/Tyres, Wheels and Tyres, Wheels and Tyres Guide.

Type Approval No.: e1*2001/116*0307*20 to e1*2001/116*0307*23

Overview

Model engine output	Tyres	Tyre size	Wheel rim	Off-set in mm	Snow chains	Remarks
3.6l V6 220 kW; petrol engine	Standard tyres	235/40 R 18 95W	8 J x 18 ⇒ page 590	44	No	General information on: ◆ Winter tyres ⇒ page 15 ◆ Snow chains ⇒ page 18
	Modification	235/45 R 17 94W	7 1/2 J x 17 ⇒ page 587	47	No	Tyre makes recommended by Volkswagen: ◆ Summer tyres ⇒ page 664 ◆ All-season tyres ⇒ page 675 ◆ Winter tyres ⇒ page 693
	Winter tyres	205/50 R 17 93H/V	6 J x 17 ⇒ page 587	45	Yes	
3.6l V6 220 kW; petrol engine	Standard tyres	235/35 R 19 91Y* ⇒ page 586	8 J x 19 ⇒ page 591	44	No	* 235/35 R 19 91Y tyres on 8 J x 19 rims with an offset of 44 are only possible if the specified conditions ⇒ page 592 are met!
	Modification	235/45 R 17 94W	7 1/2 J x 17 ⇒ page 587	47	No	
		235/40 R 18 95W	8 J x 18 ⇒ page 590	44	No	
	Winter tyres	205/50 R 17 93H/V	6 J x 17 ⇒ page 587	45	Yes	

Tyre inflation pressures are located on a sticker in the fuel tank flap or in ⇒ Maintenance ; Booklet ; Check tyres: condition, profile, inflation pressure, depth of tread .

Protected by copyright. Copying for private or commercial purposes, in part or in whole, is not permitted unless authorised by Volkswagen AG. Volkswagen AG does not guarantee or accept any liability with respect to the correctness of information in this document. Copyright by Volkswagen AG.

satelettronica

56.3 Wheel allocation for Passat R36, type 3C model year 2008 to model year 2011

Explanation of information on wheels ⇒ page 59

Torque settings for wheel bolts ⇒ Running gear, axles, steering; Rep. gr. 44 ; Torque settings for fitting wheels

Pitch circle diameter:	112 mm
Number of wheel bolt holes:	5

56.3.1 6 J x 17

Caution

Observe the allocation of wheels and tyres to the respective engines, which are listed in the overview table *⇒ page 584* *.*

Winter wheel

3C0 601 025 M - Wheel and tyre combination ⇒ page 585

Size:	6 J x 17
Wheel offset in mm:	45
Wheel load in kg:	650

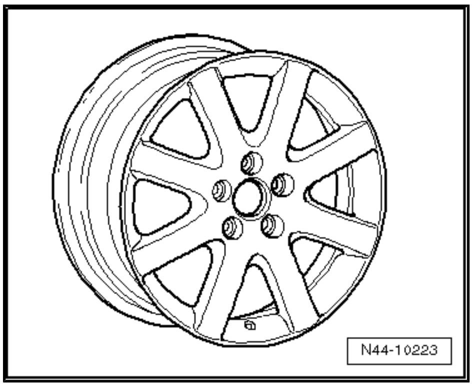

Protected by copyright. Copying for private or commercial purposes, in part or in whole, is not permitted unless authorised by Volkswagen AG. Volkswagen AG does not guarantee or accept any liability with respect to the correctness of information in this document. Copyright by Volkswagen AG.

56.3.2 7 1/2 J x 17

Caution

Observe the allocation of wheels and tyres to the respective engines, which are listed in the overview table *⇒ page 584* *.*

3C0 601 025 AQ - Wheel and tyre combination ⇒ page 585

Size:	7 1/2 J x 17
Wheel offset in mm:	47
Wheel load in kg:	650

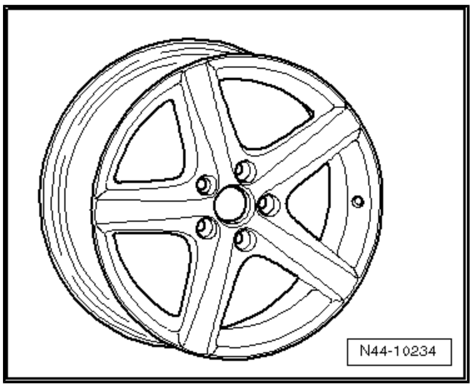

satelettronica

3C0 601 025 BB - Wheel and tyre combination ⇒ page 585

Size:	7 1/2 J x 17
Wheel offset in mm:	47
Wheel load in kg:	650

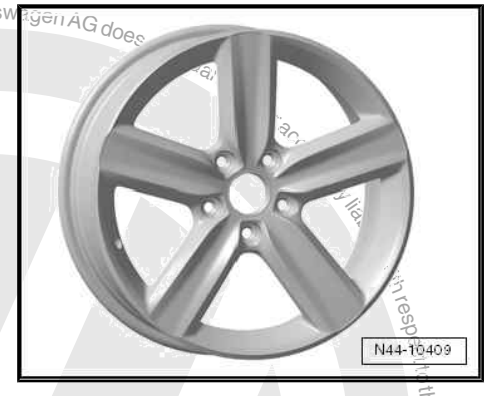

3C0 601 025 D - Wheel and tyre combination ⇒ page 585

Size:	7 1/2 J x 17
Wheel offset in mm:	47
Wheel load in kg:	650

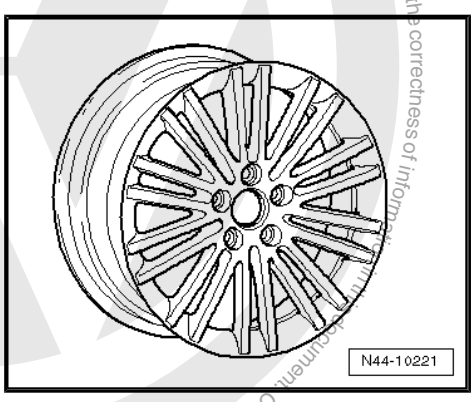

3C0 601 025 E - Wheel and tyre combination ⇒ page 585

Size:	7 1/2 J x 17
Wheel offset in mm:	47
Wheel load in kg:	650

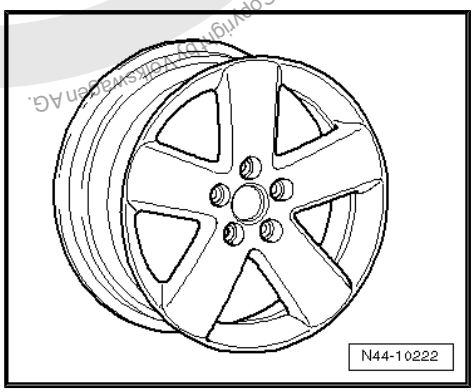

3C0 601 025 G - Wheel and tyre combination ⇒ page 585

Size:	7 1/2 J x 17
Wheel offset in mm:	47
Wheel load in kg:	650

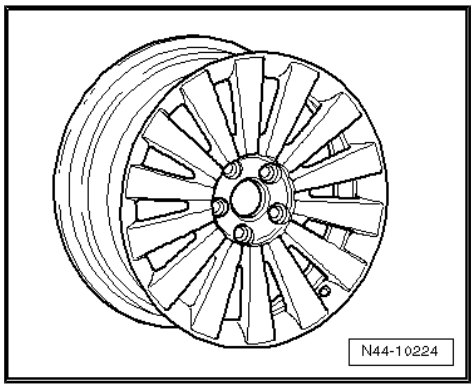

Protected by copyright. Copying for private or commercial purposes, in part or in whole, is not permitted unless authorised by Volkswagen AG. Volkswagen AG does not guarantee or accept any liability with respect to the correctness of information in this electronic document.
satelettronica

3C0 601 025 J - Wheel and tyre combination ⇒ page 585

Size:	$7^1/_2$ J x 17
Wheel offset in mm:	47
Wheel load in kg:	650

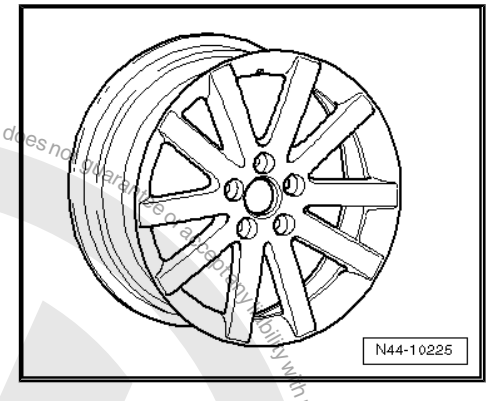

3C0 601 025 K - Wheel and tyre combination ⇒ page 585

Size:	$7^1/_2$ J x 17
Wheel offset in mm:	47
Wheel load in kg:	650

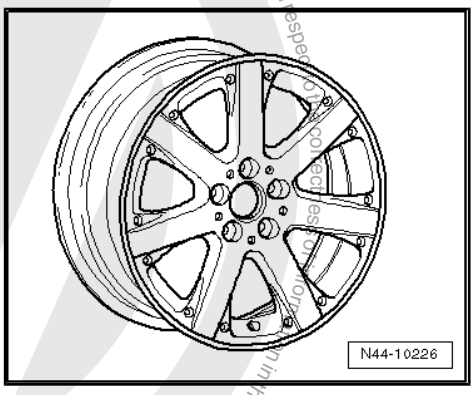

3C0 601 025 R - Wheel and tyre combination ⇒ page 585

Size:	$7^1/_2$ J x 17
Wheel offset in mm:	47
Wheel load in kg:	650

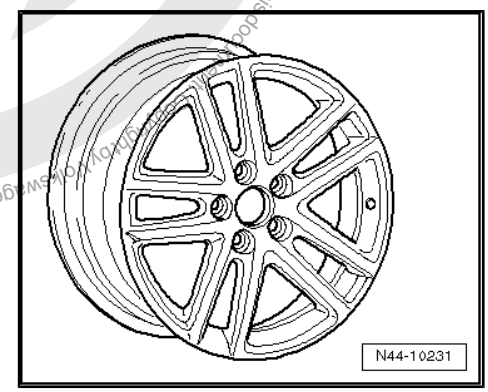

3C0 601 025 S - Wheel and tyre combination ⇒ page 585

Size:	$7^1/_2$ J x 17
Wheel offset in mm:	47
Wheel load in kg:	650

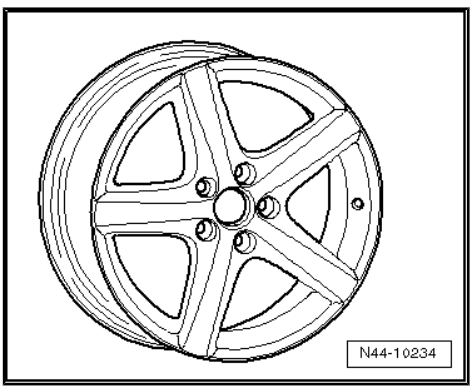

Protected by copyright. Copying for private or commercial purposes, in part or in whole, is not permitted unless authorised by Volkswagen AG. Volkswagen AG does not guarantee or accept any liability with respect to the correctness of information in this document.
satelettronica

3C0 601 025 AJ - Wheel and tyre combination ⇒ page 585

Size:	$7^1/_2$ J x 17
Wheel offset in mm:	47
Wheel load in kg:	650

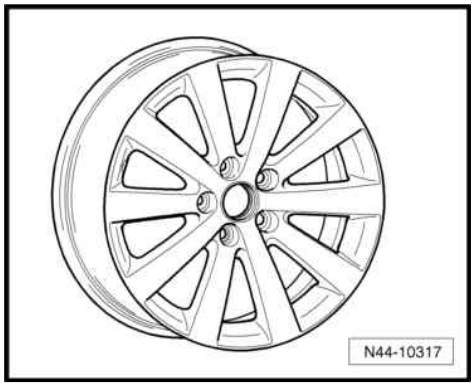

56.3.3 8 J x 18

Caution

Observe the allocation of wheels and tyres to the respective engines, which are listed in the overview table ⇒ page 584 *.*

3C0 601 025 AA - Wheel and tyre combination ⇒ page 584

Size:	8 J x 18
Wheel offset in mm:	44
Wheel load in kg:	650

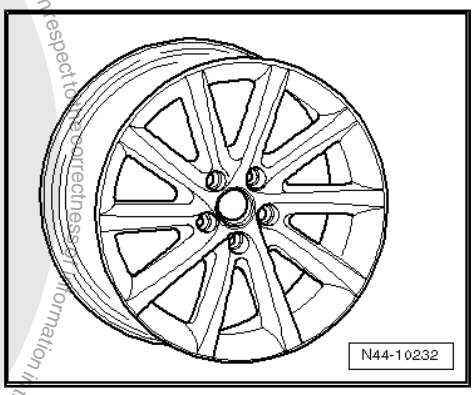

3C0 601 025 AB, 3C0 601 025 AP - Wheel and tyre combination ⇒ page 584

Size:	8 J x 18
Wheel offset in mm:	44
Wheel load in kg:	650

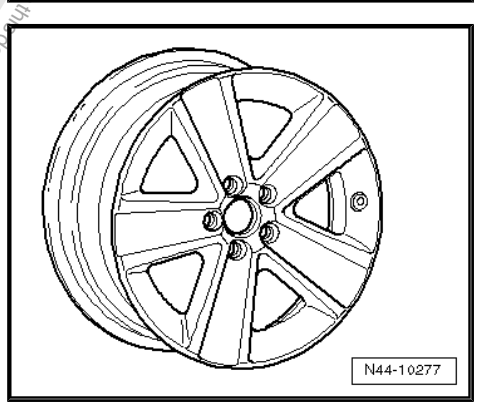

3C0 601 025 AC - Wheel and tyre combination ⇒ page 584

Size:	8 J x 18
Wheel offset in mm:	44
Wheel load in kg:	650

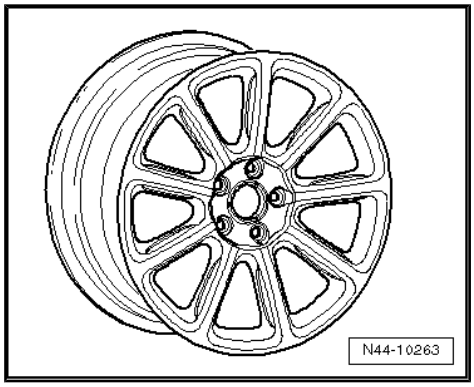

Protected by copyright. Copyright by Volkswagen AG. Volkswagen AG does not guarantee or accept any liability with respect to the correctness of information in this document. This document is not published unless authorised for commercial purposes or commercial use.

satelettronica

3C0 601 025 T, 3C0 601 025 AN - Wheel and tyre combination ⇒ page 584

Size:	8 J x 18
Wheel offset in mm:	44
Wheel load in kg:	650

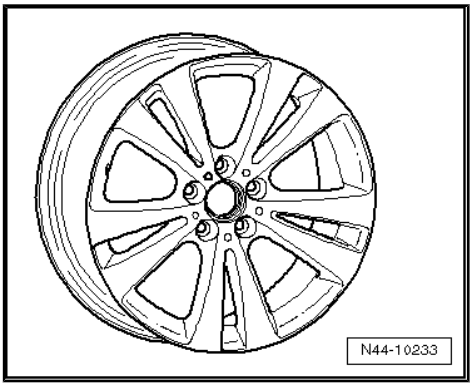

3C0 601 025 AG - Wheel and tyre combination ⇒ page 584

Size:	8 J x 18
Wheel offset in mm:	44
Wheel load in kg:	650

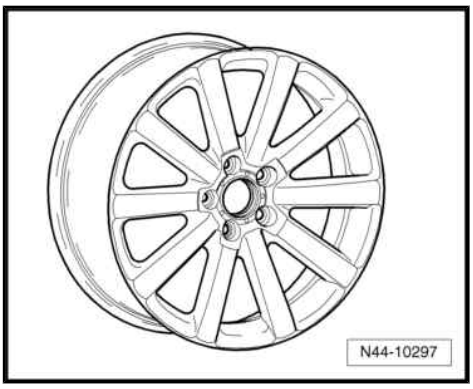

3C0 601 025 BA - Wheel and tyre combination ⇒ page 584

Size:	8 J x 18
Wheel offset in mm:	44
Wheel load in kg:	650

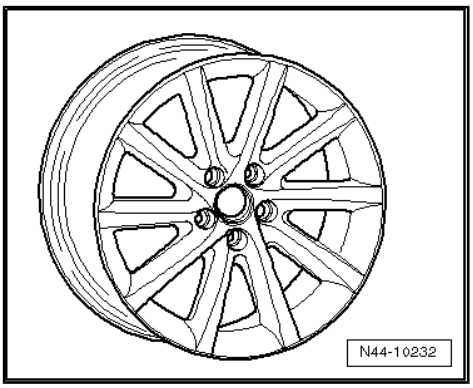

56.3.4 8 J x 19

Caution

Observe the allocation of wheels and tyres to the respective engines, which are listed in the overview table ⇒ page 584 *.*

Protected by copyright. Copying for private or commercial purposes, in part or in whole, is not permitted unless authorised by Volkswagen AG. Volkswagen AG does not guarantee or accept any liability with respect to the correctness of information in this document. Copyright by Volkswagen AG.
satelettronica

Caution

8 J x 19 wheels can only be fitted under the following conditions:

- *The wheels may only be fitted on R36 vehicles which have factory fitted 19 inch wheels and have been delivered with thees wheels.*
- *Retrofitting vehicles with factory fitted 18 inch wheels is not possible.*
- *The running gear settings are analogue the 18 inch running gear.*

3C0 601 025 AM- Wheel and tyre combination ⇒ page 585

Size:	8 J x 19
Wheel offset in mm:	44
Wheel load in kg:	650

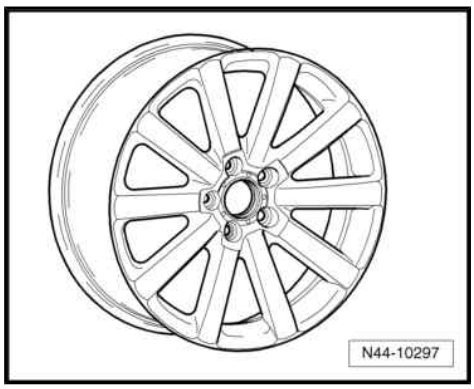

Protected by copyright. Copying for private or commercial purposes, in part or in whole, is not permitted unless authorised by Volkswagen AG. Volkswagen AG does not guarantee or accept any liability with respect to the correctness of information in this document. Copyright by Volkswagen AG.
satelettronica

57 Sharan from model year 1996

General

Volkswagen vehicles are built according to the latest findings in safety engineering. To keep it that way, we recommend the use of only genuine Volkswagen spare parts. You can recognise this by the VW Audi logo and by the part number. It has been established that these parts are reliable, safe and suitable.

Despite constant appraisal of the market, we cannot assess other products on these points, even when in isolated cases they have been passed by official inspectors or have been granted official approval. Therefore, we cannot, of course, assume any liability if these products are installed.

> **WARNING**
>
> *The products from Volkswagen genuine parts and Votex genuine accessories may differ in fitting requirements, torque specifications and so on.*
>
> *Always follow the respective fitting and operating instructions.*

The wheel and tyre combinations or changes listed in the vehicle tables refer exclusively to Volkswagen Genuine wheels. Approval of wheel and tyre combinations or a change to wheels from the accessories trade is not possible with the parts certificate attached here.

> **WARNING**
>
> *The fitting instructions and torque specifications for wheels from Votex genuine accessories may differ from those intended for wheels from Volkswagen genuine parts.*
>
> *Therefore, always observe the torque settings for the wheel bolts as well as the respective fitting and operating instructions.*

57.1 Sharan, Sharan Syncro, type 7M model year 1996 to model year 2000

Appendix for parts certificate 3533/09

The parts certificate can be found on the Volkswagen ServiceNet under Accessories/Tyres, Wheels and Tyres, Wheels and Tyres Guide.

Type Approval No.: e1*93/81*0023*00 to e1*93/81*0023*03

Type Approval No.: e1*95/54*0023*04 to e1*95/54*0023*09

Type Approval No.: e1*98/14*0023*10 to e1*98/14*0023*12

Overview

> **WARNING**
>
> *Wheel bolts and/or wheels of vehicles from model year 2001 are not permitted! Distinguishing features* *⇒ page 70* *.*

Protected by copyright. Copyright by Volkswagen AG. Volkswagen AG does not guarantee or accept any liability with respect to the correctness of information in this document. Copyright by Volkswagen AG.
satelettronica

Model engine output	Tyres	Tyre size	Wheel rim	Off-set in mm	Snow chains	Remarks
1.9l 66 kW, 81 kW TDI 85 kW petrol engine CL, GL Carat	Standard tyres	195/65 R 15 95T reinforced/XL	6 J x 15 ⇒ page 596	55	Yes	Conversion to 7 J x 15 wheels: For vehicles with CL or GL equipment to vehicle No. T0050000, track rod joints 7M0 422 817 A/ 7M0 422 818 A must be installed.
	Modification	195/65 R 15 95T reinforced/XL	7 J x 15 ⇒ page 597	59	No	
		205/60 R 15 95H reinforced/XL	6 J x 15 ⇒ page 596	55	Yes	General information on: ♦ Winter tyres ⇒ page 15 ♦ Snow chains ⇒ page 18
		205/60 R 15 95H reinforced/XL	7 J x 15 ⇒ page 597	59	No	Tyre makes recommended by Volkswagen:
		215/60 R 15 95H	6 J x 15 ⇒ page 596	55	No	♦ Summer tyres ⇒ page 665 ♦ Winter tyres ⇒ page 694
		215/60 R 15 95H	7 J x 15 ⇒ page 597	59	No	
		215/55 R 16 93H* ⇒ page 594	7 J x 16 ⇒ page 598	59	No	* 215/55 R 16 93H: Tyres are not permissible on Syncro and 1.9l 85 kW TDI vehicles!
		215/55 R 16 95H** ⇒ page 594 reinforced/XL	7 J x 16 ⇒ page 598	59	No	
	Winter tyres	195/65 R 15 95Q/T reinforced/XL	6 J x 15 ⇒ page 596	55	Yes	
1.8l 110 kW; 128 kW VR6 GL, Carat; 128 kW VR6 Syncro GL, Carat	Standard tyres	205/60 R 15 95H reinforced/XL	6 J x 15 ⇒ page 596	55	Yes	** Tyre pressure for 1.9l 85 kW TDI ⇒ page 596
	Modification	205/60 R 15 95H reinforced/XL	7 J x 15 ⇒ page 597	59	No	
		215/60 R 15 95H	6 J x 15 ⇒ page 596	55	No	

Protected by copyright. Copying for private or commercial purposes, in part or in whole, is not permitted unless authorised by Volkswagen AG. Volkswagen AG does not guarantee or accept any liability with respect to the correctness of information in this document. Copyright by Volkswagen AG.

satelettronica

Model engine output	Tyres	Tyre size	Wheel rim	Off-set in mm	Snow chains	Remarks
		215/60 R 15 95H	7 J x 15 ⇒ page 597	59	No	
		215/55 R 16 93H	7 J x 16 ⇒ page 598	59	No	
	Winter tyres	195/65 R 15 95Q/T reinforced/XL	6 J x 15 ⇒ page 596	55	Yes	
All vehicles with Carat equipment	Standard tyres	215/60 R 15 95H	7 J x 15 ⇒ page 597	59	No	
	Modification	215/55 R 16 93H* ⇒ page 594	7 J x 16 ⇒ page 598	59	No	
		215/55 R 16 95H** ⇒ page 594 rein-forced/XL	7 J x 16 ⇒ page 598	59	No	
		205/60 R 15 95H reinforced/XL	6 J x 15 ⇒ page 596	55	Yes	
		205/60 R 15 95H reinforced/XL	7 J x 15 ⇒ page 597	59	No	
		215/60 R 15 95H	6 J x 15 ⇒ page 596	55	No	
	Winter tyres	195/65 R 15 95Q/T reinforced/XL	6 J x 15 ⇒ page 596	55	Yes	
All vehicles with Trendline/High-line equipment	Standard tyres	215/55 R 16 95H reinforced/XL	7 J x 16 ⇒ page 598	59	No	
	Modification	215/55 R 16 93H* ⇒ page 594	7 J x 16 ⇒ page 598	59	No	
		215/55 R 16 95H** ⇒ page 594 rein-forced/XL	7 J x 16 ⇒ page 598	59	No	
		205/60 R 15 95H reinforced/XL	6 J x 15 ⇒ page 596	55	Yes	

Volkswagen AG. Volkswagen AG does not guarantee or accept any liability with respect to the correctness of information in this document. Copyright Volkswagen AG. Protected by copyright. Copying for private or commercial purposes, in part or in whole, is not permitted unless authorised by Volkswagen AG.

satelettronica

Model engine output	Tyres	Tyre size	Wheel rim	Off-set in mm	Snow chains	Remarks
		205/60 R 15 95H reinforced/XL	7 J x 15 ⇒ page 597	59	No	
		215/60 R 15 95H	6 J x 15 ⇒ page 596	55	No	
		215/60 R 15 95H	7 J x 15 ⇒ page 597	59	No	
	Winter tyres	195/65 R 15 95Q/T reinforced/XL	6 J x 15 ⇒ page 596	55	Yes	

Tyre inflation pressures are located on a sticker in the fuel tank flap or in ⇒ Maintenance ; Booklet ; Check tyres: condition, profile, inflation pressure, depth of tread .

Exceptions to this are the 215/55 R 16 95H tyres, see "Remarks" column ⇒ page 594

Tyre pressure for 1.9l 85 kW TDI:

Tyre pressure M + S:	
Part load front:	2.9
Part load rear:	2.5
Full load front:	3.1
Full load rear:	3.3

57.2 Wheel allocation for Sharan, Sharan Syncro. Type 7M model year 1996 to model year 2000

Explanation of information on wheels ⇒ page 59

Wheel bolt torque settings ⇒ Running gear, axles, steering - front and four-wheel drive; Rep. gr. 44 ; Wheel bolt torque settings

Pitch circle diameter:	112 mm
Number of wheel bolt holes:	5

57.2.1 6 J x 15

Caution

Observe the allocation of wheels and tyres to the respective engines, which are listed in the overview table ⇒ page 593 .

Protected by copyright. Copyright by Volkswagen AG. Volkswagen AG does not guarantee or accept any liability with respect to the correctness of information in this document. Copyright by Volkswagen AG.
satelettronica

All models with front-wheel drive, all Syncro models

7M0 601 027 A - Wheel and tyre combination ⇒ page 594

Size:	6 J x 15
Wheel offset in mm:	55
Wheel load in kg:	690

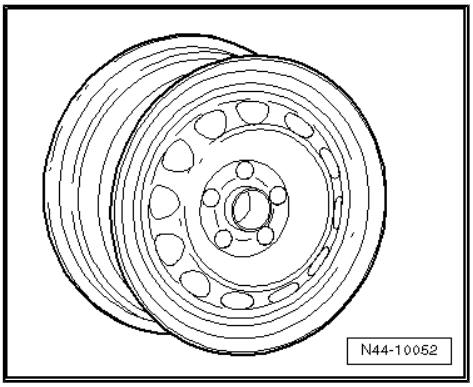

57.2.2 7 J x 15

Caution

Observe the allocation of wheels and tyres to the respective engines, which are listed in the overview table ⇒ page 593 *.*

Note

Snow chains are not permitted with 7 J x 15 or 7 J x 16 wheels. Snow chains are permitted only on 195/65 R 15 and 205/60 R 15 tyres with 6 J x 15 offset 55 wheels. The track rod joints 7M0 422 817 A/7M0 422 818 A must be installed on vehicles with CL or GL equipment through vehicle No. T005000.

All models with front-wheel drive, all Syncro models

7M0 601 025, 7M0 601 025 C - Wheel and tyre combination ⇒ page 594

Size:	7 J x 15
Wheel offset in mm:	59
Wheel load in kg:	690

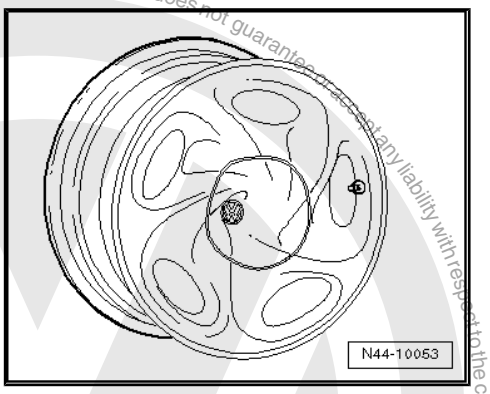

7M0 601 025 F - Wheel and tyre combination ⇒ page 594

Size:	7 J x 15
Wheel offset in mm:	59
Wheel load in kg:	690

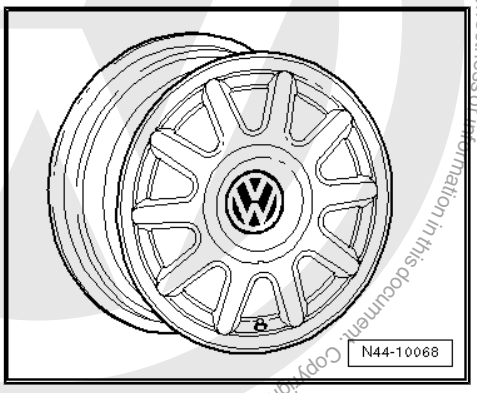

Protected by copyright. Copying for private or commercial purposes, in part or in whole, is not permitted unless authorised by Volkswagen AG. Volkswagen AG does not guarantee or assume any liability with respect to the correctness of information in this document. Copyright by Volkswagen AG.
satelettronica

57.2.3 7 J x 16

Caution

Observe the allocation of wheels and tyres to the respective engines, which are listed in the overview table ⇒ page 593 *.*

Note

Snow chains are not permitted with 7 J x 15 or 7 J x 16 wheels. Snow chains are permitted only on 195/65 R 15 and 205/60 R 15 tyres with 6 J x 15 offset 55 wheels. The track rod joints 7M0 422 817 A/7M0 422 818 A must be installed on vehicles with CL or GL equipment through vehicle No. T005000.

All models with front-wheel drive, all Syncro models

7M0 601 025 E - Wheel and tyre combination ⇒ page 594

Size:	7 J x 16
Wheel offset in mm:	59
Wheel load in kg:	690

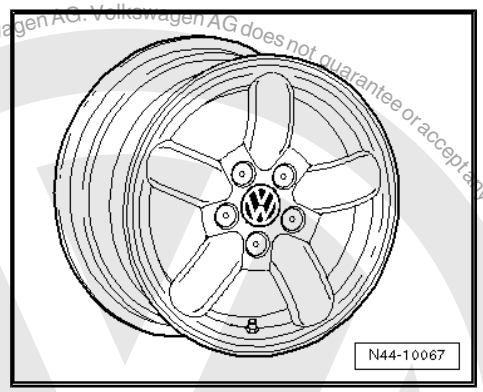

7M0 601 025 G - Wheel and tyre combination ⇒ page 594

Size:	7 J x 16
Wheel offset in mm:	59
Wheel load in kg:	690

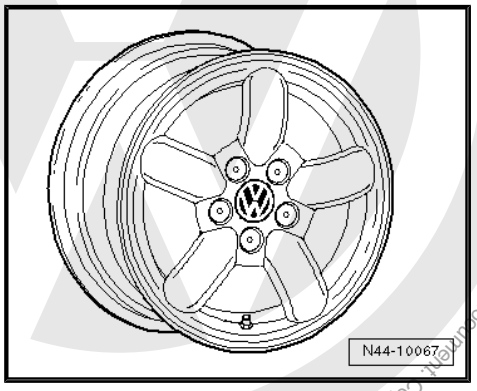

57.3 Sharan, Sharan 4Motion, type 7M model year 2001

Appendix for parts certificate 3533/09

The parts certificate can be found on the Volkswagen ServiceNet under Accessories/Tyres, Wheels and Tyres, Wheels and Tyres Guide.

Protected by copyright. Copyright by Volkswagen AG.
Volkswagen AG does not guarantee or accept any liability with respect to the correctness of information in this document. Copying for private or commercial purposes, in part or in whole, is not permitted unless authorised by Volkswagen AG.
satelettronica

Type Approval No.: e1*98/14*0023*13 to e1*98/14*0023*16

Overview

WARNING

Sharan vehicles from model year 2001 onwards have modified wheel bolts and wheels. Wheel bolts and/or wheels from vehicles to model year 2000 are not permitted! Distinguishing features ⇒ page 70 .

Model engine output	Tyres	Tyre size	Wheel rim	Off-set in mm	Snow chains	Remarks
2.0l 85 kW; 1.9l 66 kW TDI	Standard tyres	195/65 R 15 95T reinforced/XL	6 J x 15 ⇒ page 601	55	Yes	
	Modification	205/60 R 15 95H reinforced/XL	6 J x 15 ⇒ page 601	55	Yes	General information on: ◆ Winter tyres ⇒ page 15 ◆ Snow chains ⇒ page 18
		215/60 R 15 95H	7 J x 15 ⇒ page 601	59	No	Tyre makes recommended by Volkswagen:
		215/55 R 16 95H reinforced/XL	7 J x 16 ⇒ page 603	59	No	◆ Summer tyres ⇒ page 665 ◆ Winter tyres ⇒ page 694
	Winter tyres	195/65 R 15 95Q/T reinforced/XL	6 J x 15 ⇒ page 601	55	Yes	
		195/60 R 16 C 99/97Q/T	6 J x 16 ⇒ page 602	53	Yes	
1.9l 85 kW TDI front-wheel drive	Standard tyres	205/60 R 15 95H reinforced/XL	6 J x 15 ⇒ page 601	55	Yes	
	Modification	195/65 R 15 95T reinforced/XL	6 J x 15 ⇒ page 601	55	Yes	
		215/60 R 15 95H	7 J x 15 ⇒ page 601	59	No	
		215/55 R 16 95H reinforced/XL	7 J x 16 ⇒ page 603	59	No	
	Winter tyres	195/65 R 15 95Q/T reinforced/XL	6 J x 15 ⇒ page 601	55	Yes	

Protected by copyright. Copying for private or commercial purposes, in part or in whole, is not permitted unless authorised by Volkswagen AG. Volkswagen AG does not guarantee or accept any liability with respect to the correctness of information in this document. Copyright by Volkswagen AG.

satelettronica

Model engine output	Tyres	Tyre size	Wheel rim	Off-set in mm	Snow chains	Remarks
		195/60 R 16 C 99/97Q/T	6 J x 16 ⇒ page 602	53	Yes	
1.9l 85 kW TDI 4Motion	Standard tyres	215/55 R 16 95H reinforced/XL	6 J x 16 ⇒ page 602	53	No	
		215/55 R 16 95H reinforced/XL	7 J x 16 ⇒ page 603	59	No	
	Modification	No changes are permissible apart from the standard wheel and tyre combinations!				
	Winter tyres	195/60 R 16 C 99/97Q/T	6 J x 16 ⇒ page 602	53	Yes	
1.8l 110 kW Turbo	Standard tyres	205/60 R 15 95H reinforced/XL	6 J x 15 ⇒ page 601	55	Yes	
	Modification	215/60 R 15 95H	7 J x 15 ⇒ page 601	59	No	
		215/55 R 16 95H reinforced/XL	7 J x 16 ⇒ page 603	59	No	
	Winter tyres	195/65 R 15 95Q/T reinforced/XL	6 J x 15 ⇒ page 601	55	Yes	
		195/60 R 16 C 99/97Q/T	6 J x 16 ⇒ page 602	53	Yes	
VR6 150 kW front-wheel drive and 4Motion	Standard tyres	215/55 R 16 95W reinforced/XL	6 J x 16 ⇒ page 602	53	No	
		215/55 R 16 95W reinforced/XL	7 J x 16 ⇒ page 603	59	No	
	Modification	No changes are permissible apart from the standard wheel and tyre combinations!				
	Winter tyres	195/60 R 16 C 99/97Q/T	6 J x 16 ⇒ page 602	53	Yes	

Tyre inflation pressures are located on a sticker in the fuel tank flap or in ⇒ Maintenance ; Booklet ; Check tyres: condition, profile, inflation pressure, depth of tread .

Protected by copyright. Copying for private or commercial purposes, in part or in whole, is not permitted unless authorised by Volkswagen AG. Volkswagen AG does not guarantee or accept any liability with respect to the correctness of information in this document. Copyright by Volkswagen AG.
satelettronica

57.4 Wheel allocation for Sharan, Sharan 4Motion, type 7M model year 2001

Explanation of information on wheels ⇒ page 59

Wheel bolt torque settings ⇒ Running gear, axles, steering - front and four-wheel drive; Rep. gr. 44 ; Wheel bolt torque settings

Pitch circle diameter:	112 mm
Number of wheel bolt holes:	5

57.4.1 6 J x 15

Caution

Observe the allocation of wheels and tyres to the respective engines, which are listed in the overview table ⇒ page 599 *.*

Models through 110 kW with front-wheel drive

7M0 601 027 F - Wheel and tyre combination ⇒ page 599

Size:	6 J x 15
Wheel offset in mm:	55
Wheel load in kg:	690

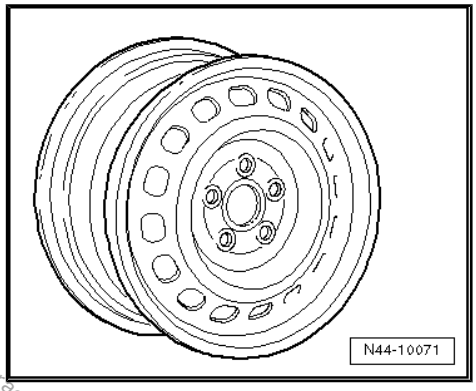

57.4.2 7 J x 15

Caution

Observe the allocation of wheels and tyres to the respective engines, which are listed in the overview table ⇒ page 599 *.*

Models through 110 kW with front-wheel drive

Note

Snow chains are not permitted on 7 J x 15 or 7 J x 16 wheels.

7M3 601 025 B - Wheel and tyre combination ⇒ page 599

Size:	7 J x 15
Wheel offset in mm:	59
Wheel load in kg:	690

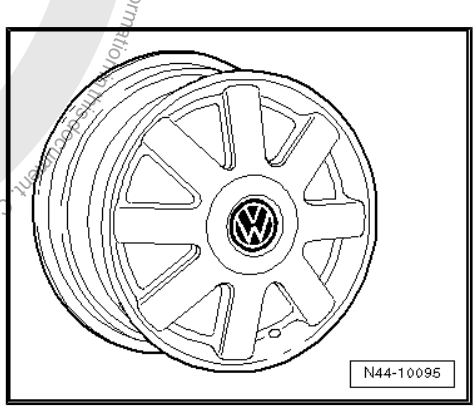

Protected by copyright. Copyright by Volkswagen AG. Volkswagen AG does not guarantee or accept any liability with respect to the correctness of information in this document. Copyright by Volkswagen AG. Copying for private or commercial purposes, in part or in whole, is not permitted unless authorised by Volkswagen AG.
satelettronica

57.4.3 6 J x 16

Caution

Observe the allocation of wheels and tyres to the respective engines, which are listed in the overview table ⇒ page 599 .

Protected by copyright. Copying for private or commercial purposes, in part or in whole, is not permitted unless authorised by Volkswagen AG. Volkswagen AG does not guarantee or accept any liability with respect to the correctness of information in this document. Copyright by Volkswagen AG.

Models through 110 kW with front-wheel drive

7M3 601 027 E - Wheel and tyre combination ⇒ page 599

Size:	6 J x 16
Wheel offset in mm:	53
Wheel load in kg:	730

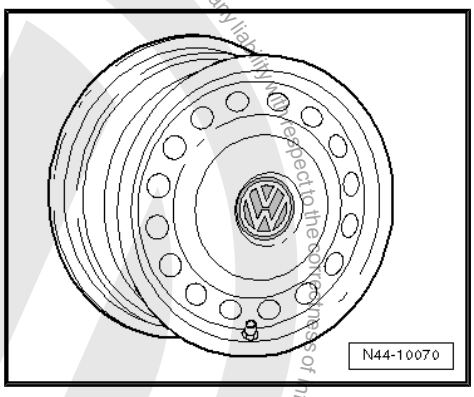

1.9l 85 kW TDI 4Motion, VR6 150 kW front-wheel drive and 4Motion

7M3 601 027 D - Wheel and tyre combination ⇒ page 600

For M + S tyres

Size:	6 J x 16
Wheel offset in mm:	53
Wheel load in kg:	690

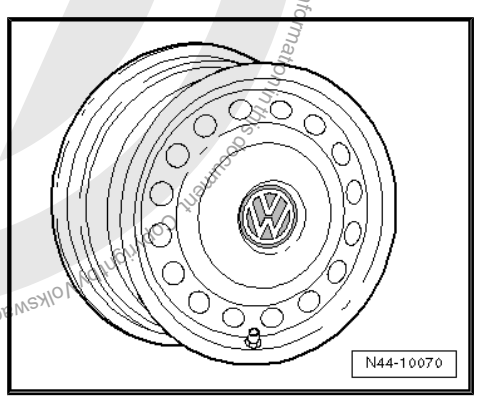

7M3 601 027 E - Wheel and tyre combination ⇒ page 600

Size:	6 J x 16
Wheel offset in mm:	53
Wheel load in kg:	710

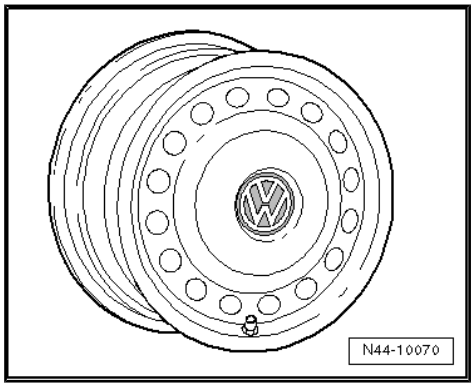

satelettronica

7M3 601 027 F - Wheel and tyre combination ⇒ page 600

Size:	6 J x 16
Wheel offset in mm:	53
Wheel load in kg:	710

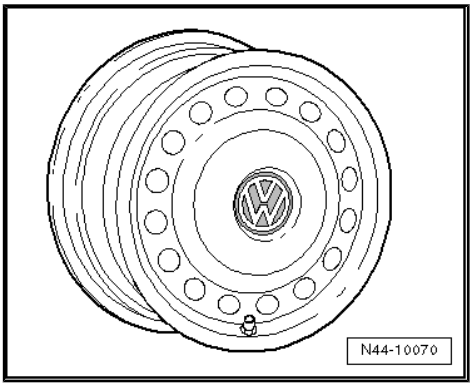

57.4.4 7 J x 16

Caution

Observe the allocation of wheels and tyres to the respective engines, which are listed in the overview table ⇒ page 599 *.*

Models through 110 kW with front-wheel drive

Note

Snow chains are not permitted on 7 J x 15 or 7 J x 16 wheels.

7M3 601 025 A - Wheel and tyre combination ⇒ page 599

Size:	7 J x 16
Wheel offset in mm:	59
Wheel load in kg:	710

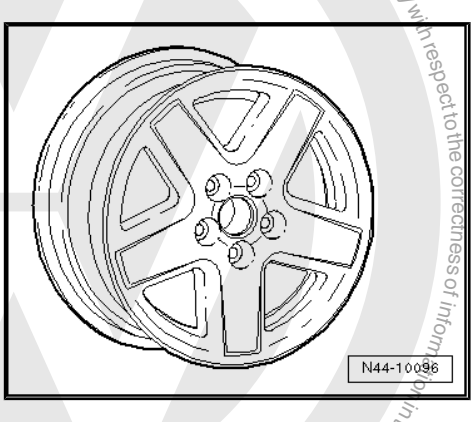

1.9l 85 kW TDI 4Motion, VR6 150 kW front-wheel drive and 4Motion

Note

Snow chains are not permitted on 7 J x 15 or 7 J x 16 wheels.

7M0 601 027 J - Wheel and tyre combination ⇒ page 600

Size:	7 J x 16
Wheel offset in mm:	59
Wheel load in kg:	710

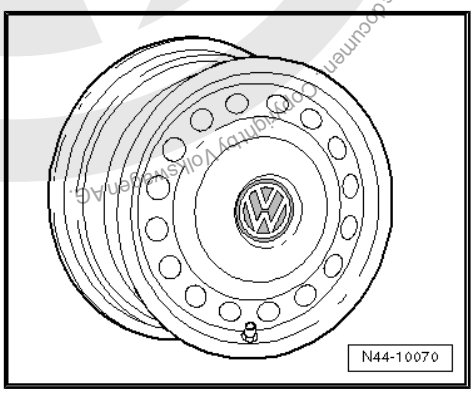

Protected by copyright. Copying for private or commercial purposes, in part or in whole, is not permitted unless authorised by Volkswagen AG. Volkswagen AG does not guarantee or accept any liability with respect to the correctness of information in this document. Copyright by Volkswagen AG.
satelettronica

7M3 601 025 A - Wheel and tyre combination ⇒ page 600

Size:	7 J x 16
Wheel offset in mm:	59
Wheel load in kg:	710

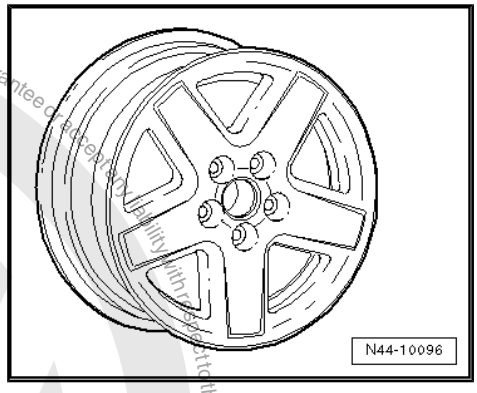

7M3 601 025 D - Wheel and tyre combination ⇒ page 600

Note

Not permitted for vehicles with 16" brakes.

Size:	7 J x 16
Wheel offset in mm:	59
Wheel load in kg:	690

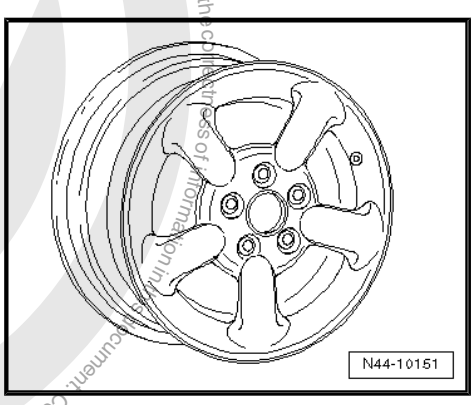

7M3 601 025 F - Wheel and tyre combination ⇒ page 600

Size:	7 J x 16
Wheel offset in mm:	59
Wheel load in kg:	730

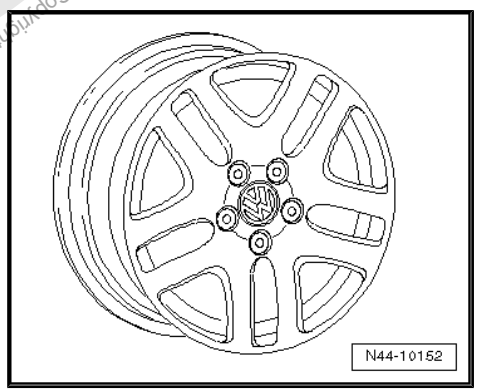

7M3 601 025 G - Wheel and tyre combination ⇒ page 600

Size:	7 J x 16
Wheel offset in mm:	59
Wheel load in kg:	730

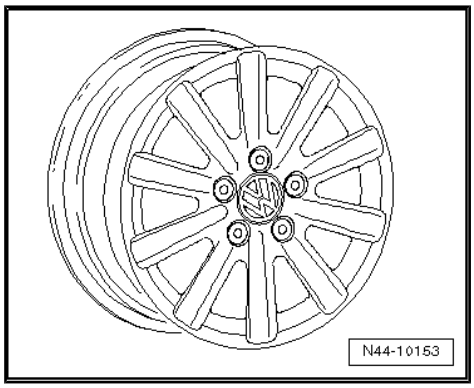

Protected by copyright. Copying for private or commercial purposes, in part or in whole, is not permitted unless authorised by Volkswagen AG. Volkswagen AG does not guarantee or accept any liability with respect to the correctness of information in this document. Copyright by Volkswagen AG.

satelettronica

7M3 601 025 H - Wheel and tyre combination ⇒ page 600

Size:	7 J x 16
Wheel offset in mm:	59
Wheel load in kg:	730

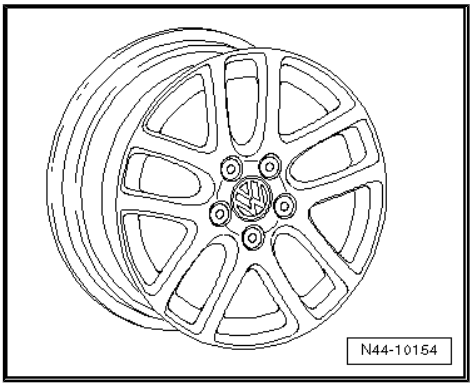

57.5 Sharan, Sharan 4Motion, type 7M model year 2002 to model year 2010

Appendix for parts certificate 3533/09

The parts certificate can be found on the Volkswagen ServiceNet under Accessories/Tyres, Wheels and Tyres, Wheels and Tyres Guide.

Type Approval No.: e1*98/14*0023*17 to e1*98/14*0023*20

Type Approval No.: e1*2001/116*0023*21 to e1*2001/116*0023*36

Overview

WARNING

Sharan vehicles from model year 2001 onwards have modified wheel bolts and wheels. Wheel bolts and/or wheels from vehicles to model year 2000 are not permitted! Distinguishing features ⇒ page 70

Model engine output	Tyres	Tyre size	Wheel rim	Off-set in mm	Snow chains	Remarks
2.0l 85 kW; 1.8l 110 kW turbo petrol engines	Standard tyres	195/60 R 16 C 99/97H	6 J x 16 ⇒ page 607	53	Yes	
1.9l 66 kW TDI; 1.9l 85 kW TDI; front-wheel drive and 4Motion 1.9l 96 kW TDI front-wheel drive;	Modification	205/55 R 16 C 98/96H	6 J x 16 ⇒ page 607	53	No	General information on: ◆ Winter tyres ⇒ page 15 ◆ Snow chains ⇒ page 18
1.9l 110 kW TDI front-wheel drive; 2.0l 100 kW TDI front-wheel drive; 2.0l 103 kW TDI front-wheel drive; diesel engines		215/55 R 16 95H reinforced/XL	6 J x 16 ⇒ page 607	53	No	
		215/55 R 16 95H reinforced/XL	7 J x 16 ⇒ page 607	59	No	Tyre makes recommended by Volkswagen:

Protected by copyright. Copying for private or commercial purposes, in part or in whole, is not permitted unless authorised by Volkswagen AG. Volkswagen AG does not guarantee or accept any liability with respect to the correctness of information in this document. Copyright by Volkswagen AG.

satelettronica

Model engine output	Tyres	Tyre size	Wheel rim	Off-set in mm	Snow chains	Remarks
		225/45 R 17 94W reinforced/XL	7 J x 17 ⇒ page 609	54	No	♦ Summer tyres ⇒ page 665 ♦ Winter tyres ⇒ page 694
	Winter tyres	195/60 R 16 C 99/97Q/T	6 J x 16 ⇒ page 607	53	Yes	
		205/55 R 16 94Q/T/H/V reinforced/XL * ⇒ page 606 *** ⇒ page 606	6 J x 16 ⇒ page 607	53	No	* Winter tyres with "V-rating" ⇒ page 16
VR6 150 kW front-wheel drive and 4Motion	Standard tyres	215/55 R 16 95W reinforced/XL	6 J x 16 ⇒ page 607	53	No	** Tyre pressure for VR6 150 kW ⇒ page 606
		215/55 R 16 95W reinforced/XL	7 J x 16 ⇒ page 607	59	No	*** Caution: A supplement must be added to the vehicle documents!
	Modification	225/45 R 17 94W reinforced/XL	7 J x 17 ⇒ page 609	54	No	
	Winter tyres	195/60 R 16 C 99/97Q/T	6 J x 16 ⇒ page 607	53	Yes	
		205/55 R 16 94Q/T/H/V reinforced/XL * ⇒ page 606 ** ⇒ page 606 *** ⇒ page 606	6 J x 16 ⇒ page 607	53	No	

Tyre inflation pressures are located on a sticker in the fuel tank flap or in ⇒ Maintenance ; Booklet ; Check tyres: condition, profile, inflation pressure, depth of tread .

Tyre pressure for VR6 150 kW:

Tyre pressure M + S:	
Part load front:	3.1
Part load rear:	2.8
Full load front:	3.2
Full load rear:	3.4

57.6 Wheel allocation for Sharan, Sharan 4Motion, type 7M model year 2002 to model year 2010

Explanation of information on wheels ⇒ page 59

Wheel bolt torque settings ⇒ Running gear, axles, steering - front and four-wheel drive; Rep. gr. 44 ; Wheel bolt torque settings

Protected by copyright. Copying for private and commercial purposes, in part or whole, is not permitted unless authorised by Volkswagen AG. Volkswagen AG does not guarantee or accept any liability with respect to the correctness of information in this document. Copyright by Volkswagen AG.
satelettronica

Pitch circle diameter:	112 mm
Number of wheel bolt holes:	5

57.6.1 6 J x 16

Caution

Observe the allocation of wheels and tyres to the respective engines, which are listed in the overview table ⇒ page 605 .

7M3 601 027 D - Wheel and tyre combination ⇒ page 605

For M + S tyres

Only for vehicles to maximum permissible axle load of 1,380 kg

Size:	6 J x 16
Wheel offset in mm:	53
Wheel load in kg:	690

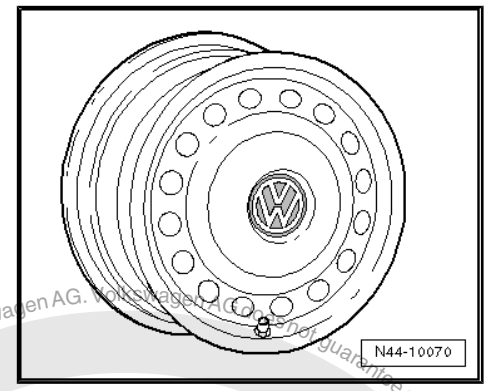

7M3 601 027 E - Wheel and tyre combination ⇒ page 605

Size:	6 J x 16
Wheel offset in mm:	53
Wheel load in kg:	730

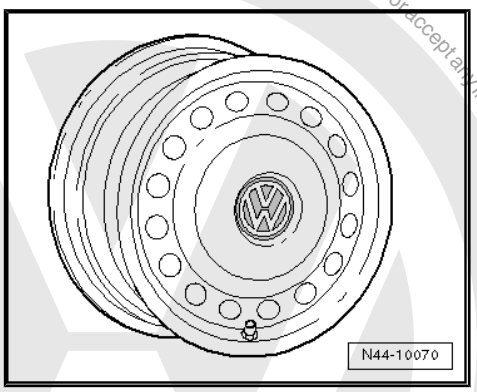

7M3 601 027 F - Wheel and tyre combination ⇒ page 605

Size:	6 J x 16
Wheel offset in mm:	53
Wheel load in kg:	710

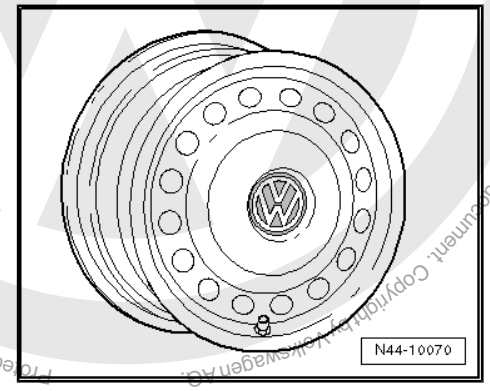

57.6.2 7 J x 16

Caution

Observe the allocation of wheels and tyres to the respective engines, which are listed in the overview table ⇒ page 605 .

Protected by copyright. Copying for private or commercial purposes, in part or in whole, is not permitted unless authorised by Volkswagen AG. Volkswagen AG does not guarantee or accept any liability with respect to the correctness of information in this document. Copyright by Volkswagen AG.
satelettronica

Note

No snow chains are permitted on 7 J x 16 wheels.

7M0 601 027 J - Wheel and tyre combination ⇒ page 605

Size:	7 J x 16
Wheel offset in mm:	59
Wheel load in kg:	710

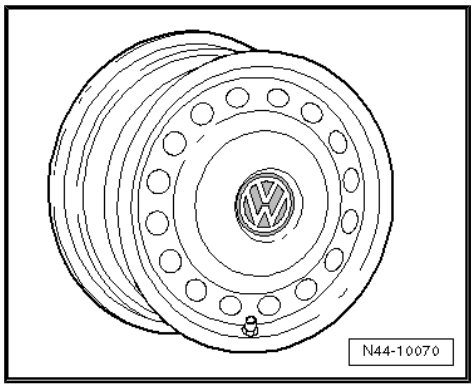

7M3 601 025 A - Wheel and tyre combination ⇒ page 605

Size:	7 J x 16
Wheel offset in mm:	59
Wheel load in kg:	710

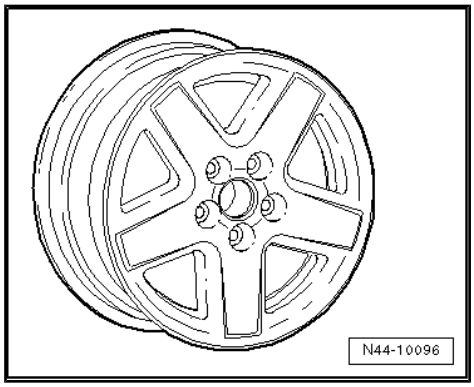

7M3 601 025 E - Wheel and tyre combination ⇒ page 605

Size:	7 J x 16
Wheel offset in mm:	59
Wheel load in kg:	730

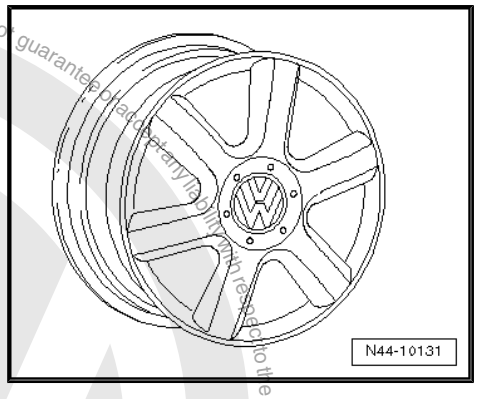

7M3 601 025 D - Wheel and tyre combination ⇒ page 605

Note

Not permitted for vehicles with 16" brakes.

Only for vehicles to maximum permissible axle load of 1,380 kg

Size:	7 J x 16
Wheel offset in mm:	59
Wheel load in kg:	690

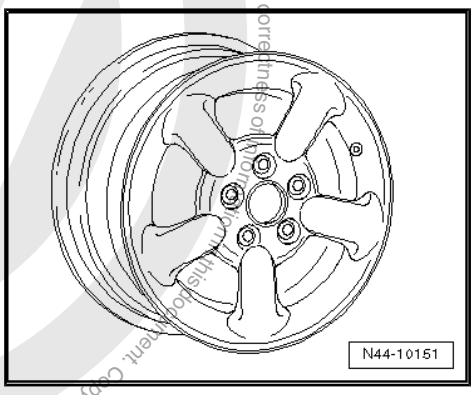

Protected by copyright. Copying for private or commercial purposes, in part or in whole, is not permitted unless authorised by Volkswagen AG. Volkswagen AG does not guarantee or accept any liability with respect to the correctness of information in this document. Copyright by Volkswagen AG.
satelettronica

7M3 601 025 F - Wheel and tyre combination ⇒ page 605

Size:	7 J x 16
Wheel offset in mm:	59
Wheel load in kg:	730

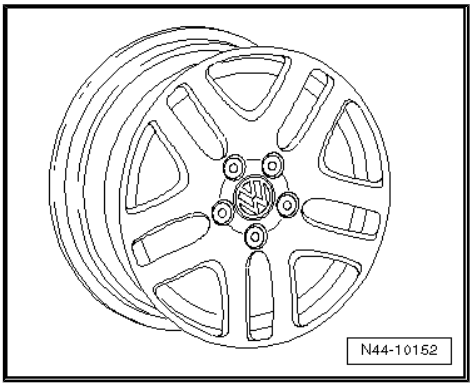

7M3 601 025 G - Wheel and tyre combination ⇒ page 605

Size:	7 J x 16
Wheel offset in mm:	59
Wheel load in kg:	730

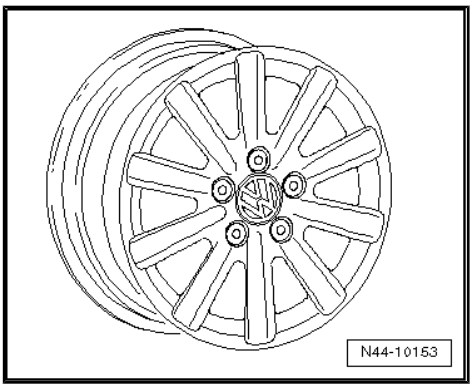

7M3 601 025 H - Wheel and tyre combination ⇒ page 605

Size:	7 J x 16
Wheel offset in mm:	59
Wheel load in kg:	730

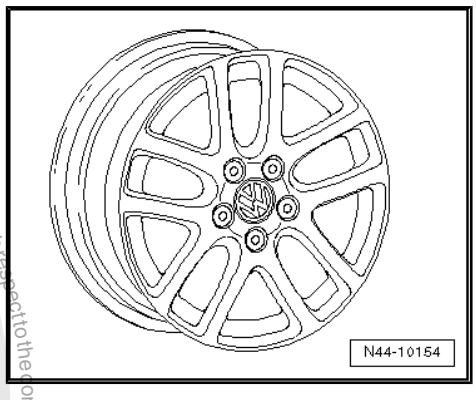

57.6.3 7 J x 17

Caution

Observe the allocation of wheels and tyres to the respective engines, which are listed in the overview table ⇒ page 605 *.*

Note

No snow chains are permitted on 7 J x 17 wheels.

Protected by copyright. Copying for private or commercial purposes, in part or in whole, is not permitted unless authorised by Volkswagen AG. Volkswagen AG does not guarantee or accept any liability with respect to the correctness of information in this document. Copyright by Volkswagen AG.
satelettronica

Protected by copyright. Copying for private or commercial purposes, in part or in whole, is not permitted unless authorised by Volkswagen AG. Volkswagen AG does not guarantee or accept any liability with respect to the correctness of information in this document. Copyright by Volkswagen AG.

7M3 601 025 J - Wheel and tyre combination ⇒ page 606

Only for vehicles to maximum permissible axle load of 1,380 kg

Size:	7 J x 17
Wheel offset in mm:	54
Wheel load in kg:	690

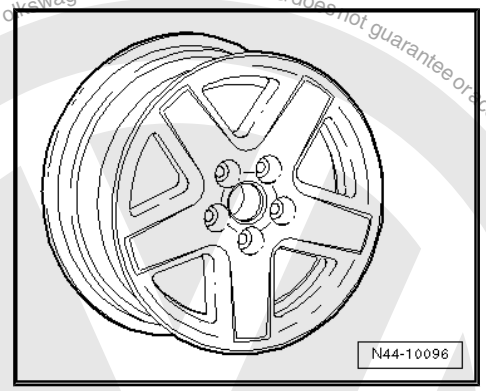

7M3 601 025 K - Wheel and tyre combination ⇒ page 606

Only for vehicles to maximum permissible axle load of 1,380 kg

Size:	7 J x 17
Wheel offset in mm:	54
Wheel load in kg:	690

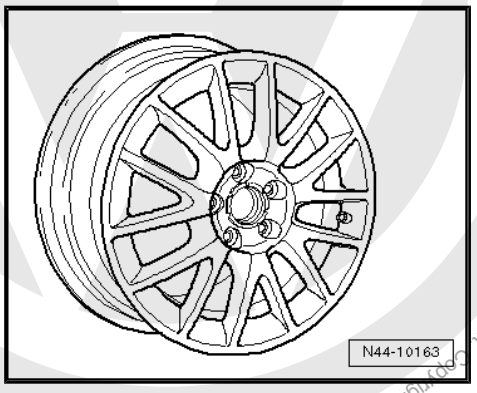

7M3 601 025 L - Wheel and tyre combination ⇒ page 606

Only for vehicles to maximum permissible axle load of 1,380 kg

Size:	7 J x 17
Wheel offset in mm:	54
Wheel load in kg:	690

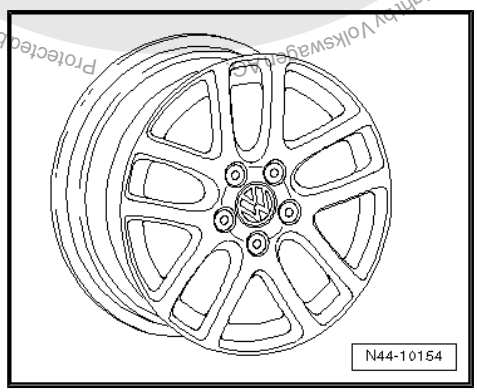

7M3 601 025 M - Wheel and tyre combination ⇒ page 606

Size:	7 J x 17
Wheel offset in mm:	54
Wheel load in kg:	730

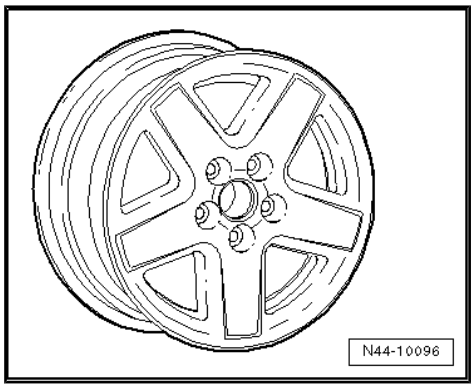

satelettronica

58 Sharan BlueMotion from model year 2009

General

Volkswagen vehicles are built according to the latest findings in safety engineering. To keep it that way, we recommend the use of only genuine Volkswagen spare parts. You can recognise this by the VW Audi logo and by the part number. It has been established that these parts are reliable, safe and suitable.

Despite constant appraisal of the market, we cannot assess other products on these points, even when in isolated cases they have been passed by official inspectors or have been granted official approval. Therefore, we cannot, of course, assume any liability if these products are installed.

> ⚠ WARNING
>
> *The products from Volkswagen genuine parts and Votex genuine accessories may differ in fitting requirements, torque specifications and so on.*
>
> *Always follow the respective fitting and operating instructions.*

The wheel and tyre combinations or changes listed in the vehicle tables refer exclusively to Volkswagen Genuine wheels. Approval of wheel and tyre combinations or a change to wheels from the accessories trade is not possible with the parts certificate attached here.

> ⚠ WARNING
>
> *The fitting instructions and torque specifications for wheels from Votex genuine accessories may differ from those intended for wheels from Volkswagen genuine parts.*
>
> *Therefore, always observe the torque settings for the wheel bolts as well as the respective fitting and operating instructions.*

58.1 Sharan BlueMotion, type 7M model year 2009 to model year 2010

Appendix for parts certificate 3533/09

The parts certificate can be found on the Volkswagen ServiceNet under Accessories/Tyres, Wheels and Tyres, Wheels and Tyres Guide.

Type Approval No.: e1*2001/116*0023*33 to e1*2001/116*0023*36

Overview

> ⚠ WARNING
>
> *Sharan vehicles from model year 2001 onwards have modified wheel bolts and wheels. Wheel bolts and/or wheels from vehicles to model year 2000 are not permitted! Distinguishing features* *⇒ page 70*

Protected by copyright. Copying for private or commercial purposes, in part or in whole, is not permitted unless authorised by Volkswagen AG. Volkswagen AG does not guarantee or accept any liability with respect to the correctness of information in this document. Copyright by Volkswagen AG.

Model engine output	Tyres	Tyre size	Wheel rim	Off-set in mm	Snow chains	Remarks
2.0l 103 kW TDI diesel engine	Standard tyres	195/60 R 16 C 99/97H	6 J x 16 ⇒ page 612	53	Yes	General information on: ◆ Winter tyres ⇒ page 15 ◆ Snow chains ⇒ page 18
	Modification	No changes are permissible apart from the standard wheel and tyre combinations!				Tyre makes recommended by Volkswagen: ◆ Summer tyres ⇒ page 665 ◆ Winter tyres ⇒ page 694
	Winter tyres	195/60 R 16 C 99/97Q/T	6 J x 16 ⇒ page 612	53	Yes	

Tyre inflation pressures are located on a sticker in the fuel tank flap or in ⇒ Maintenance ; Booklet ; Check tyres: condition, profile, inflation pressure, depth of tread .

58.2 Wheel allocation for Sharan BlueMotion, type 7M model year 2009 to model year 2010

Explanation of information on wheels ⇒ page 59

Wheel bolt torque settings ⇒ Running gear, axles, steering - front and four-wheel drive; Rep. gr. 44 ; Wheel bolt torque settings

Pitch circle diameter:	112 mm
Number of wheel bolt holes:	5

58.2.1 6 J x 16

Caution

Observe the allocation of wheels and tyres to the respective engines, which are listed in the overview table ⇒ page 611 .

7M3 601 027 E - Wheel and tyre combination ⇒ page 612

Size:	6 J x 16
Wheel offset in mm:	53
Wheel load in kg:	730

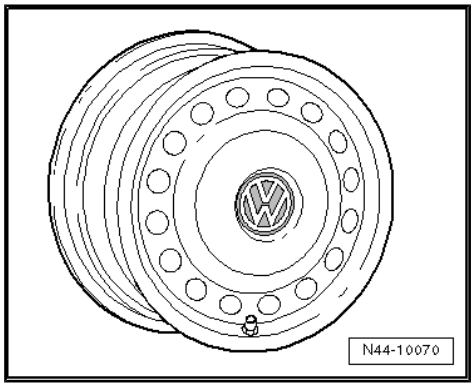

Protected by copyright. Copyright by Volkswagen AG. Copyright by Volkswagen AG. Volkswagen AG does not guarantee or accept any liability with respect to the correctness of information in this document. Copyright by Volkswagen AG. Reproduction, in part or whole, is not permitted unless authorized by Volkswagen AG.
satelettronica

7M3 601 027 F - Wheel and tyre combination ⇒ page 612

Size:	6 J x 16
Wheel offset in mm:	53
Wheel load in kg:	710

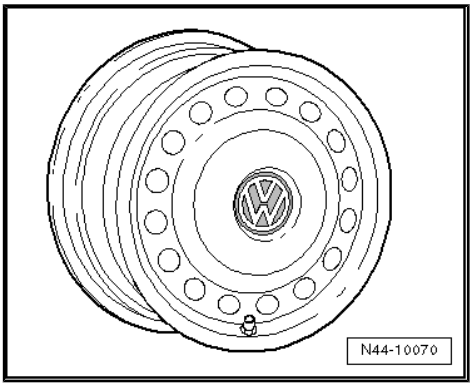

Protected by copyright. Copying for private or commercial purposes, in part or in whole, is not permitted unless authorised by Volkswagen AG. Volkswagen AG does not guarantee or accept any liability with respect to the correctness of information in this document. Copyright by Volkswagen AG.

satelettronica

59 Touareg from model year 2003

General

Volkswagen vehicles are built according to the latest findings in safety engineering. To keep it that way, we recommend the use of only genuine Volkswagen spare parts. You can recognise this by the VW Audi logo and by the part number. It has been established that these parts are reliable, safe and suitable.

Despite constant appraisal of the market, we cannot assess other products on these points, even when in isolated cases they have been passed by official inspectors or have been granted official approval. Therefore, we cannot, of course, assume any liability if these products are installed.

> ⚠ **WARNING**
>
> *The products from Volkswagen genuine parts and Votex genuine accessories may differ in fitting requirements, torque specifications and so on.*
>
> *Always follow the respective fitting and operating instructions.*

The wheel and tyre combinations or changes listed in the vehicle tables refer exclusively to Volkswagen Genuine wheels. Approval of wheel and tyre combinations or a change to wheels from the accessories trade is not possible with the parts certificate attached here.

> ⚠ **WARNING**
>
> *The fitting instructions and torque specifications for wheels from Votex genuine accessories may differ from those intended for wheels from Volkswagen genuine parts.*
>
> *Therefore, always observe the torque settings for the wheel bolts as well as the respective fitting and operating instructions.*

59.1 Touareg, type 7L, model year 2003 to model year 2010

Appendix for parts certificate 3531/09

The parts certificate can be found on the Volkswagen ServiceNet under Accessories/Tyres, Wheels and Tyres, Wheels and Tyres Guide.

Type Approval No.: e1*2001/116*0203*00 to e1*2001/116*0203*23

Overview

> ⚠ **Caution**
>
> *Take special care with suspension type:*
>
> - *Heavy duty running gear 1BP »Expedition« for which the wheel and tyre combinations are restricted* ⇒ page 615
> - *For all other types of running gear, the following wheel and tyre combinations apply* ⇒ page 615

Protected by copyright. Copying for private or commercial purposes, partly or in whole, is not permitted unless authorised by Volkswagen AG. Volkswagen AG does not guarantee or accept any liability with respect to the correctness of information in this document. Copyright by Volkswagen AG.
satelettronica

Model engine output	Tyres	Tyre size	Wheel rim	Off-set in mm	Snow chains	Remarks
»Vehicles with heavy duty running gear 1BP (Expedition)«						
R5 TDI 2.5l 120 kW; R5 TDI 2.5l 128 kW diesel engines	Standard tyres	235/65 R 17 108V	7 1/2 J x 17 ⇒ page 619	55	Yes	
V6 TDI 3.0l 155 kW; V6 TDI 3.0l 165 kW; V6 TDI 3.0l 176 kW; diesel engines	Modification	No changes are permissible apart from the standard wheel and tyre combinations!				
V6 3.2l 162 kW; V6 3.2l 177 kW; V6 3.6l 206 kW petrol engines	Off-road tyres** ⇒ page 615	235/65 R 17 108T	7 1/2 J x 17 ⇒ page 619	55	Yes	
	Winter tyres	235/65 R 17 108T/H	7 1/2 J x 17 ⇒ page 619	55	Yes	
»All running gear types apart from heavy duty running gear 1BP (Expedition)«						
R5 TDI 2.5l 120 kW; R5 TDI 2.5l 128 kW diesel engines	Standard tyres	235/65 R 17 108V	7 1/2 J x 17 ⇒ page 619	55	Yes	16" or 17" wheels can only be fitted on vehicles with 16" or 17" brake systems, respectively.
	Modification	255/60 R 17 106V	7 1/2 J x 17 ⇒ page 619	55	Yes	
		255/55 R 18 109V	8 J x 18 ⇒ page 620	57	Yes	
		275/45 R 19 108Y	9 J x 19 ⇒ page 622	60	No	
		275/40 R 20 106Y	9 J x 20* ⇒ page 615	60	No	* Not for vehicles with 16" brakes (pitch circle diameter 120 mm).
	Off-road tyres** ⇒ page 615	235/70 R 16 105T/H	7 J x 16 ⇒ page 618	54	Yes	** If off-road tyres (with M+S identification) are used, a sticker in the driver's field of vision making reference to the lower permitted maximum speed according to the speed rating of the tyre (T/H) is required, just as for winter tyres.
		235/60 R 18 107T	8 J x 18 ⇒ page 620	57	Yes	

satelettronica

Model engine output	Tyres	Tyre size	Wheel rim	Off-set in mm	Snow chains	Remarks
		255/50 R 19 107V	9 J x 19 ⇒ page 622	60	Yes	Snow chains: We recommend using snow chains on all 4 wheels ⇒ Electronic parts catalogue "ETKA - Accessories catalogue" .
	Winter tyres**** ⇒ page 616	235/65 R 17 108T/H	7 1/2 J x 17 ⇒ page 619	55	Yes	
		255/50 R 19 107V	9 J x 19 ⇒ page 622	60	Yes	**** Wheel 7L9 601 025 B (9J x 19 offset 60) is permitted as a winter wheel.
V6 3.2l 162 kW; V6 3.2l 177 kW; V6 3.6l 206 kW; V8 4.2l 228 kW petrol engines;	Standard tyres	235/65 R 17 108V	7 1/2 J x 17 ⇒ page 619	55	Yes	Tyre fitting: Before fitting the tyres, observe the instructions in ⇒ Running gear, axles, steering; Rep. gr. 44 ;
V6 TDI 3.0l 155 kW; V6 TDI 3.0l 165 kW (engine code: BKS); V6 TDI 3.0l 176 kW; diesel engine	Modification	255/60 R 17 106V	7 1/2 J x 17 ⇒ page 619	55	Yes	On vehicles with tyre pressure monitoring of the 1st generation, the tyre inflation pressures have to be saved or adapted again when summer tyres and winter tyres are changed over (either way) ⇒ Running gear, axles, steering; Rep. gr. 44 ;
		255/55 R 18 109V	8 J x 18 ⇒ page 621	57	Yes	
		275/45 R 19 108Y	9 J x 19 ⇒ page 623	60	No	
		275/40 R 20 106Y	9 J x 20 ⇒ page 624	60	No	
		275/40 R 20 106Y*** ⇒ page 616	9 1/2 J x 20 ⇒ page 626	52	No	*** The 275/40 R 20 106Y tyre is permitted on the 9 1/2 J x 20 offset 52 rim only if the stated condition ⇒ page 626 is fulfilled.
	Off-road tyres** ⇒ page 615	235/60 R 18 107T	8 J x 18 ⇒ page 621	57	Yes	

Copyright. Copying for private or commercial purposes, in part or in whole, is not permitted unless authorised by Volkswagen AG. Volkswagen AG does not guarantee or accept any liability with respect to the correctness of information in this document.

satelettronica

Model engine output	Tyres	Tyre size	Wheel rim	Off-set in mm	Snow chains	Remarks
		255/50 R 19 107V	9 J x 19 ⇒ page 623	60	Yes	
	Winter tyres**** ⇒ page 616	235/65 R 17 108T/H	7 1/2 J x 17 ⇒ page 619	55	Yes	General information on: ◆ Winter tyres ⇒ page 15 ◆ Snow chains ⇒ page 18
		235/60 R 18 107H	8 J x 18 ⇒ page 621	57	Yes	Tyre makes recommended by Volkswagen:
		255/50 R 19 107V	9 J x 19 ⇒ page 623	60	Yes	◆ Summer tyres ⇒ page 666 ◆ All-season tyres ⇒ page 675 ◆ Winter tyres ⇒ page 694
V6 TDI 3.0l 165 kW (engine code: CATA)	Standard tyres	235/65 R17 108V	7 1/2 J x 17 ⇒ page 619	55	Yes	
	Modification	255/60 R 17 106V	7 1/2 J x 17 ⇒ page 619	55	Yes	
		255/55 R 18 109Y	8 J x 18 ⇒ page 621	57	Yes	
		275/45 R 19 108V	9 J x 19 ⇒ page 623	60	No	
	Winter tyres	235/65 R 17 108T/H	7 1/2 J x 17 ⇒ page 619	55	Yes	
V10 TDI 5.0l 230 kW diesel engine; V8 4.2l 257 kW; W12 6.0l 331 kW petrol engines	Standard tyres	255/55 R 18 109Y	8 J x 18 ⇒ page 621	57	Yes	
	Modification	275/45 R 19 108Y	9 J x 19 ⇒ page 623	60	No	
		275/40 R 20 106Y	9 J x 20 ⇒ page 624	60	No	

Protected by copyright. Copying for private or commercial purposes, in part or in whole, is not permitted unless authorised by Volkswagen AG. Volkswagen AG does not guarantee or accept any liability with respect to the correctness of information in this document. Copyright by Volkswagen AG.

satelettronica

Model engine output	Tyres	Tyre size	Wheel rim	Off-set in mm	Snow chains	Remarks
		275/40 R 20 106Y*** ⇒ page 616	9 1/2 J x 20 ⇒ page 626	52	No	
	Off-road tyres** ⇒ page 615	235/60 R 18 107T	8 J x 18 ⇒ page 621	57	Yes	
		255/50 R 19 107V	9 J x 19 ⇒ page 623	60	Yes	
	Winter tyres**** ⇒ page 616	235/60 R 18 107H	8 J x 18 ⇒ page 621	57	Yes	
		255/50 R 19 107V	9 J x 19 ⇒ page 623	60	Yes	

Tyre inflation pressures are located on a sticker in the fuel tank flap or in ⇒ Maintenance ; Booklet ; Check tyres: condition, profile, inflation pressure, depth of tread .

59.2 Wheel allocation for Touareg, type 7L model year 2003 to model year 2010

Explanation of information on wheels ⇒ page 59

Torque settings for wheel bolts ⇒ Running gear, axles, steering; Rep. gr. 44

Number of wheel bolt holes: 5

Note

Currently, no steel wheel with a pitch circle diameter of 130 mm is available for the Touareg. Use the listed wheels with a pitch circle diameter of 130 mm with the sizes stated in the tyres table for winter tyres as well.

59.2.1 7 J x 16

Caution

Observe the allocation of wheels and tyres to the respective engines, which are listed in the overview table ⇒ page 614 .

Protected by copyright. Copying for private or commercial purposes, in part or in whole, is not permitted unless authorised by Volkswagen AG. Volkswagen AG does not guarantee or accept any liability with respect to the correctness of information in this document. Copyright by Volkswagen AG.

satelettronica

Protected by copyright. Copying for private or commercial purposes, in part or in whole, is not permitted unless authorised by Volkswagen AG. Volkswagen AG does not guarantee or accept any liability with respect to the correctness of information in this document. Copyright by Volkswagen AG.

R5 TDI 2.5l 120 kW; R5 TDI 2.5l 128 kW

7L6 601 027 - Wheel and tyre combination ⇒ page 615

Size:	7 J x 16
Wheel offset in mm:	54
Wheel load in kg:	875
Pitch circle diameter:	120

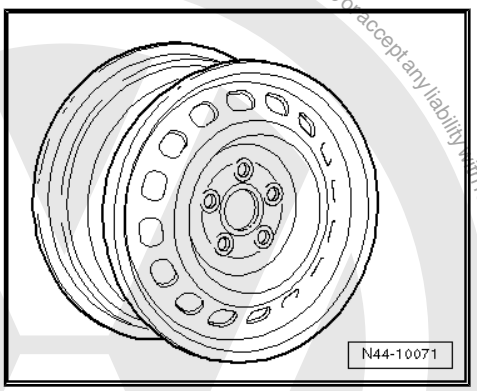

59.2.2 $7^1/_2$ J x 17

Caution

Observe the allocation of wheels and tyres to the respective engines, which are listed in the overview table ⇒ page 614 *.*

R5 TDI 2.5l 120 kW; R5 TDI 2.5l 128 kW

7L6 601 025 E - Wheel and tyre combination ⇒ page 615

Only for vehicles to maximum permissible axle load of 1,750 kg

Size:	$7^1/_2$ J x 17
Wheel offset in mm:	55
Wheel load in kg:	875
Pitch circle diameter:	120

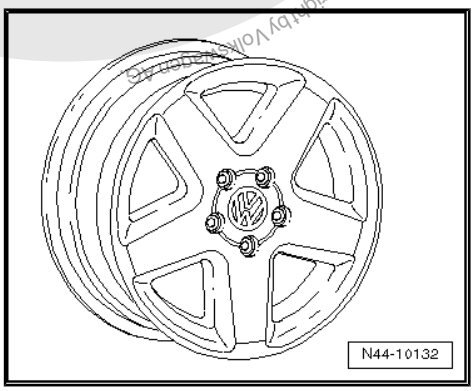

7L6 601 025 AJ - Wheel and tyre combination ⇒ page 615

Size:	$7^1/_2$ J x 17
Wheel offset in mm:	55
Wheel load in kg:	900
Pitch circle diameter:	120

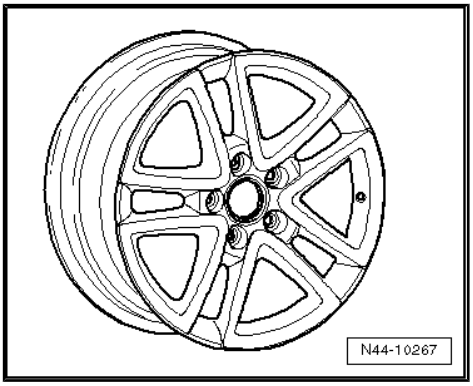

V6 3.2l 162 kW; V6 3.2l 177 kW; V6 3.6l 206 kW; V6 TDI 3.0l 155 kW; V6 TDI 3.0l 165 kW; V6 TDI 3.0l 176 kW; V8 4.2l 228 kW

satelettronica

7L6 601 025 A - Wheel and tyre combination ⇒ page 616

Only for vehicles to maximum permissible axle load of 1,750 kg

Size:	$7^1/_2$ J x 17
Wheel offset in mm:	55
Wheel load in kg:	875
Pitch circle diameter:	130

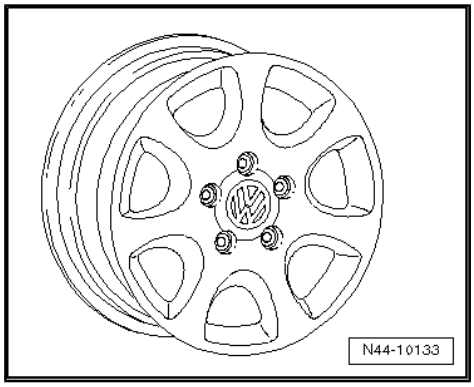

7L6 601 025 AK - Wheel and tyre combination ⇒ page 616

Size:	$7^1/_2$ J x 17
Wheel offset in mm:	55
Wheel load in kg:	900
Pitch circle diameter:	130

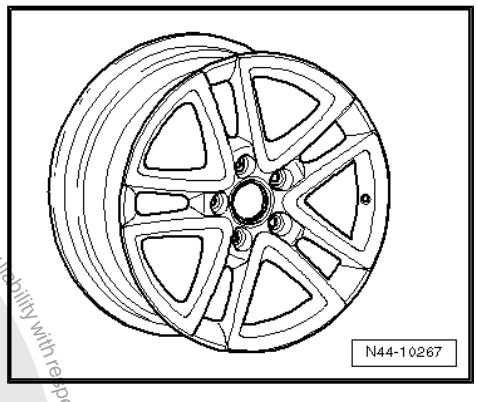

7L6 601 025 B - Wheel and tyre combination ⇒ page 616

Only for vehicles to maximum permissible axle load of 1,750 kg

Size:	$7^1/_2$ J x 17
Wheel offset in mm:	55
Wheel load in kg:	875
Pitch circle diameter:	130

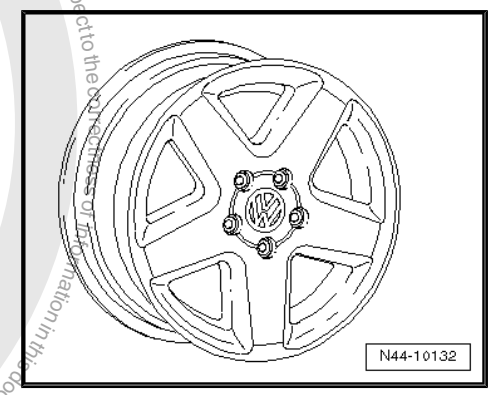

59.2.3 8 J x 18

Caution

Observe the allocation of wheels and tyres to the respective engines, which are listed in the overview table *⇒ page 614* *.*

Copyright by Volkswagen AG. Volkswagen AG does not guarantee or accept any liability with respect to the correctness of information in this document. Copyright by Volkswagen AG. Protected by copyright. Copying for private or commercial purposes, in part or in whole, is not permitted unless authorised by Volkswagen AG.
satelettronica

R5 TDI 2.5l 120 kW; R5 TDI 2.5l 128 kW

7L6 601 025 L - Wheel and tyre combination ⇒ page 615

Size:	8 J x 18
Wheel offset in mm:	57
Wheel load in kg:	900
Pitch circle diameter:	120

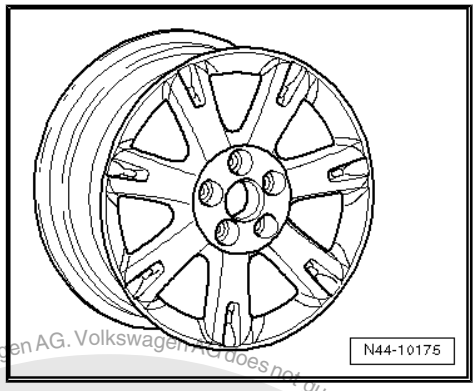

V6 3.2l 162 kW; V6 3.2l 177 kW; V6 3.6l 206 kW; V6 TDI 3.0l 155 kW; V6 TDI 3.0l 165 kW; V6 TDI 3.0l 176 kW; V8 4.2l 228 kW; V8 4.2l 257 kW

7L6 601 025, 7L6 601 025 T - Wheel and tyre combination
⇒ page 616

Size:	8 J x 18
Wheel offset in mm:	57
Wheel load in kg:	900
Pitch circle diameter:	130

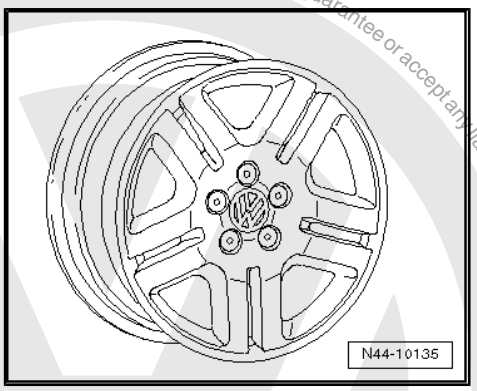

7L6 601 025 C, 7L6 601 025 AA - Wheel and tyre combination
⇒ page 616

Size:	8 J x 18
Wheel offset in mm:	57
Wheel load in kg:	900
Pitch circle diameter:	130

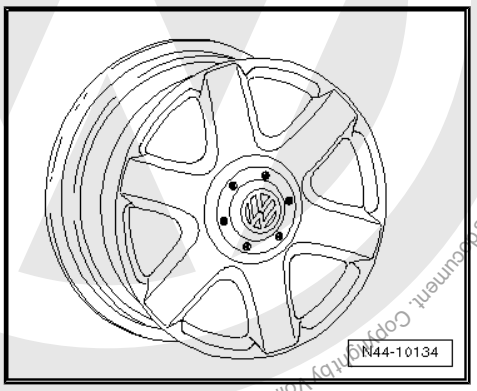

7L6 601 025 K - Wheel and tyre combination ⇒ page 616

Size:	8 J x 18
Wheel offset in mm:	57
Wheel load in kg:	900
Pitch circle diameter:	130

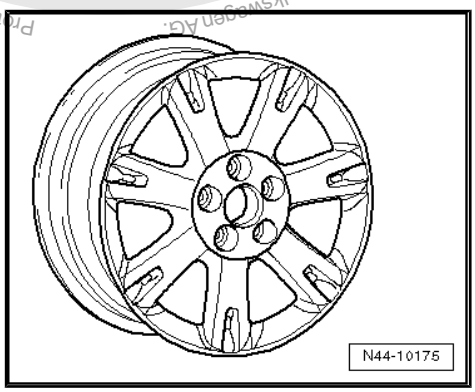

V10 TDI 5.0l 230 kW; W12 6.0l 331 kW

Protected by copyright. Copying for private or commercial purposes, in part or in whole, is not permitted unless authorised by Volkswagen AG. Volkswagen AG does not guarantee or accept any liability with respect to the correctness of information in this document. Copyright by Volkswagen AG.
satelettronica

7L6 601 025 C, 7L6 601 025 AA - Wheel and tyre combination
⇒ page 617

Size:	8 J x 18
Wheel offset in mm:	57
Wheel load in kg:	900
Pitch circle diameter:	130

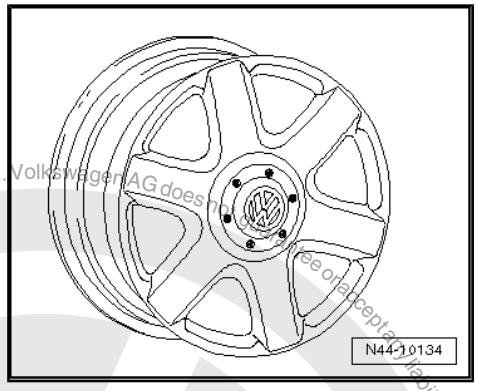

7L6 601 025 K - Wheel and tyre combination ⇒ page 617

Size:	8 J x 18
Wheel offset in mm:	57
Wheel load in kg:	900
Pitch circle diameter:	130

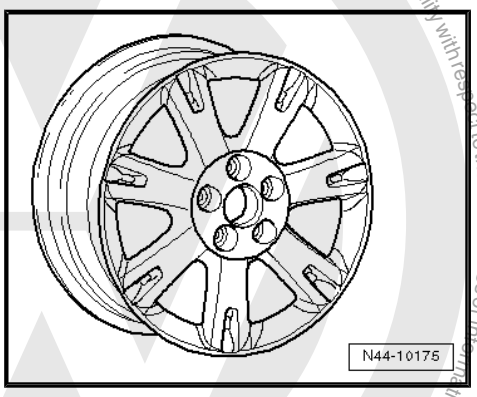

59.2.4 9 J x 19

Caution

Observe the allocation of wheels and tyres to the respective engines, which are listed in the overview table ⇒ page 614 *.*

R5 TDI 2.5l 120 kW; R5 TDI 2.5l 128 kW

7L6 601 025 N - Wheel and tyre combination ⇒ page 615

Size:	9 J x 19
Wheel offset in mm:	60
Wheel load in kg:	900
Pitch circle diameter:	120

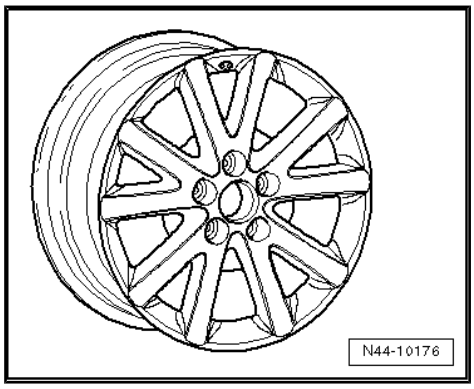

Protected by copyright. Copying for private or commercial purposes, in part or in whole, is not permitted unless authorised by Volkswagen AG. Volkswagen AG does not guarantee or accept any liability with respect to the correctness of information in this document. Copyright by Volkswagen AG.
satelettronica

7L6 601 025 AC - Wheel and tyre combination ⇒ page 615

Size:	9 J x 19
Wheel offset in mm:	60
Wheel load in kg:	900
Pitch circle diameter:	120

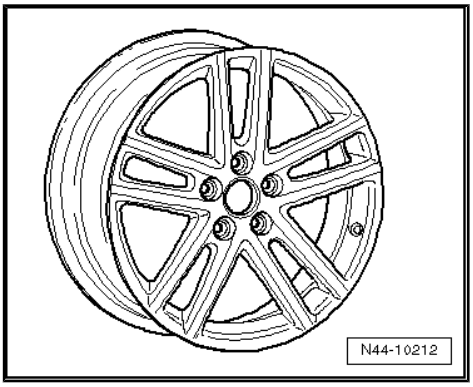

7L6 601 025 AB - Wheel and tyre combination ⇒ page 615

Size:	9 J x 19
Wheel offset in mm:	60
Wheel load in kg:	900
Pitch circle diameter:	120

V6 3.2l 162 kW; V6 3.2l 177 kW; V6 3.6l 206 kW; V6 TDI 3.0l 155 kW; V6 TDI 3.0l 165 kW; V6 TDI 3.0l 176 kW; V8 4.2l 228 kW; V8 4.2l 257 kW

V10 TDI 5.0l 230 kW; W12 6.0l 331 kW

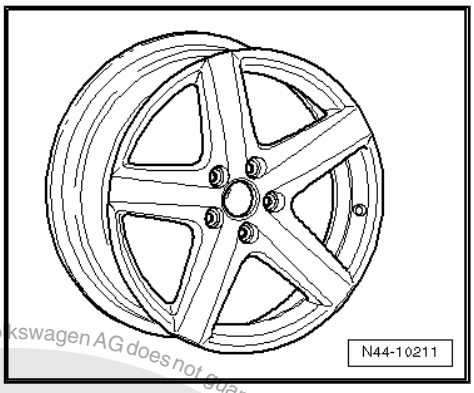

7L6 601 025 D - Wheel and tyre combination ⇒ page 616

Size:	9 J x 19
Wheel offset in mm:	60
Wheel load in kg:	900
Pitch circle diameter:	130

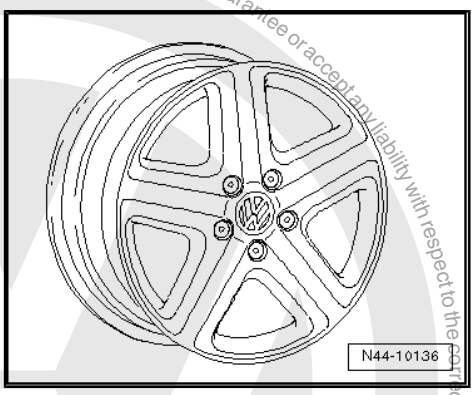

7L6 601 025 S - Wheel and tyre combination ⇒ page 616

Size:	9 J x 19
Wheel offset in mm:	60
Wheel load in kg:	900
Pitch circle diameter:	130

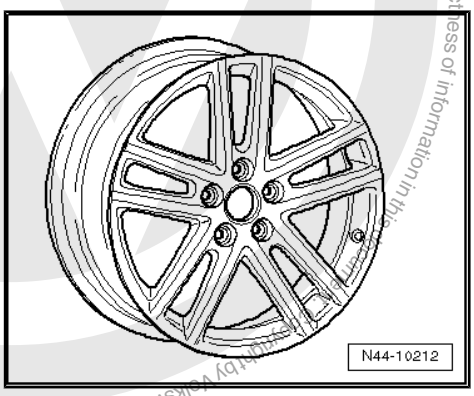

Protected by copyright. Copying for private or commercial purposes, in part or in whole, is not permitted unless authorised by Volkswagen AG. Volkswagen AG does not guarantee or accept any liability with respect to the correctness of information in this document. Copyright by Volkswagen AG.
satelettronica

7L6 601 025 R - Wheel and tyre combination ⇒ page 616

Size:	9 J x 19
Wheel offset in mm:	60
Wheel load in kg:	900
Pitch circle diameter:	130

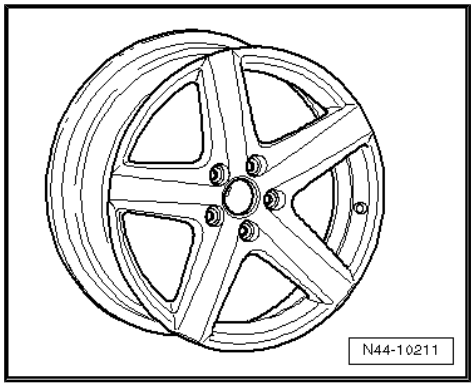

7L6 601 025 AM - Wheel and tyre combination ⇒ page 616

Size:	9 J x 19
Wheel offset in mm:	60
Wheel load in kg:	900
Pitch circle diameter:	130

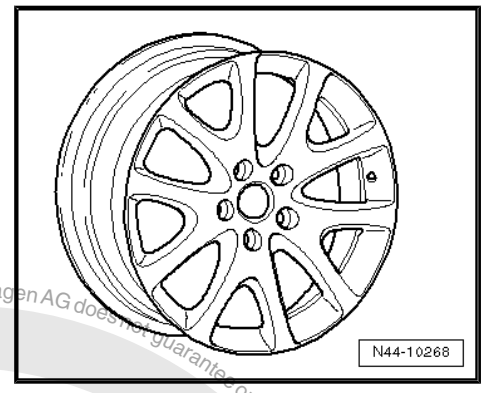

7L9 601 025 B - Wheel and tyre combination ⇒ page 616

Note

Not authorised as a winter wheel.

Size:	9 J x 19
Wheel offset in mm:	60
Wheel load in kg:	900
Pitch circle diameter:	130

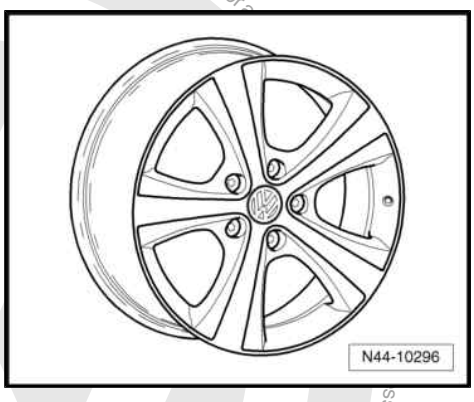

59.2.5 9 J x 20

Caution

Observe the allocation of wheels and tyres to the respective engines, which are listed in the overview table ⇒ page 614 .

Protected by copyright. Copying for private or commercial purposes, in part or in whole, is not permitted unless authorised by Volkswagen AG. Volkswagen AG does not guarantee or assume liability for the accuracy of information in this document. Copyright by Volkswagen AG.
satelettronica

V6 3.2l 162 kW; V6 3.2l 177 kW; V6 3.6l 206 kW; V6 TDI 3.0l 155 kW; V6 TDI 3.0l 165 kW; V6 TDI 3.0l 176 kW; V8 4.2l 228 kW; V8 4.2l 257 kW

V10 TDI 5.0l 230 kW; W12 6.0l 331 kW

7L6 601 025 P - Wheel and tyre combination ⇒ page 616

Size:	9 J x 20
Wheel offset in mm:	60
Wheel load in kg:	900
Pitch circle diameter:	130

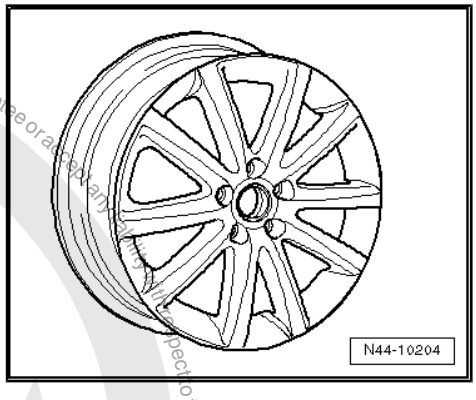

7L6 601 025 Q - Wheel and tyre combination ⇒ page 616

Size:	9 J x 20
Wheel offset in mm:	60
Wheel load in kg:	900
Pitch circle diameter:	130

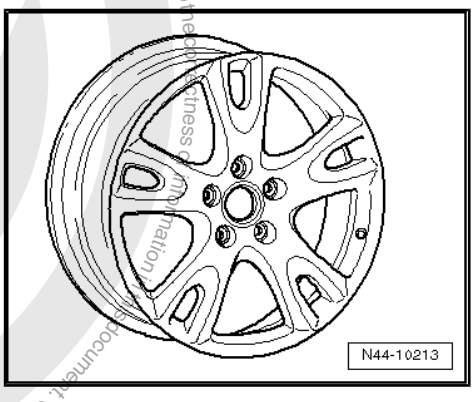

7L6 601 025 AN - Wheel and tyre combination ⇒ page 616

Size:	9 J x 20
Wheel offset in mm:	60
Wheel load in kg:	900
Pitch circle diameter:	130

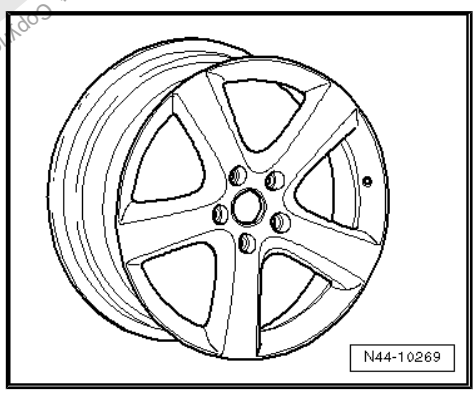

7L6 601 025 AP - Wheel and tyre combination ⇒ page 616

Size:	9 J x 20
Wheel offset in mm:	60
Wheel load in kg:	900
Pitch circle diameter:	130

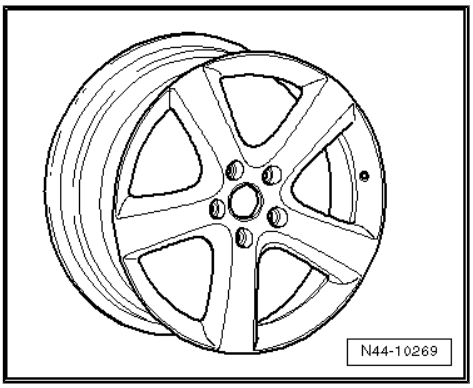

Protected by copyright. Copying for private or commercial purposes, in part or in whole, is not permitted unless authorised by Volkswagen AG. Volkswagen AG does not guarantee or accept any liability with respect to the correctness of information in this document. Copyright by Volkswagen AG.
satelettronica

7L9 601 025 C - Wheel and tyre combination ⇒ page 616

Size:	9 J x 20
Wheel offset in mm:	60
Wheel load in kg:	900
Pitch circle diameter:	130

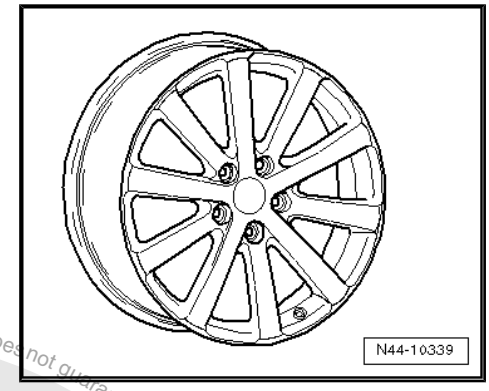

59.2.6 9$^1/_2$ J x 20

Caution

Observe the allocation of wheels and tyres to the respective engines, which are listed in the overview table ⇒ page 614 *.*

Caution

Fitting the 9$^1/_2$ J x 20-wheel is possible only under the following conditions:

- *The wheel housing and wing extensions must have been installed by Volkswagen R GmbH ⇒ Electronic parts catalogue "ETKA".*

V6 3.2l 162 kW; V6 3.2l 177 kW; V6 3.6l 206 kW; V6 TDI 3.0l 155 kW; V6 TDI 3.0l 165 kW; V6 TDI 3.0l 176 kW; V8 4.2l 228 kW; V8 4.2l 257 kW

V10 TDI 5.0l 230 kW; W12 6.0l 331 kW

7L9 601 025 - Wheel and tyre combination ⇒ page 616

Size:	9$^1/_2$ J x 20
Wheel offset in mm:	52
Wheel load in kg:	900
Pitch circle diameter:	130

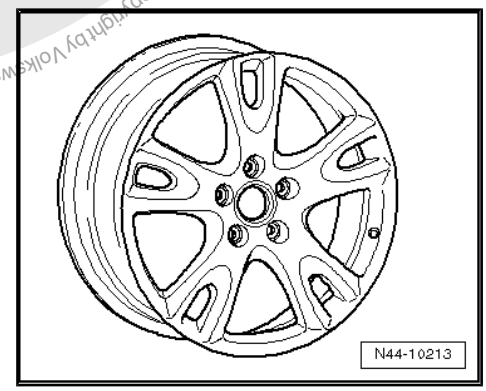

Protected by copyright. Copying for private or commercial purposes, in part or in whole, is not permitted unless authorised by Volkswagen AG. Volkswagen AG does not guarantee or accept any liability with respect to the correctness of information in this document. Copyright by Volkswagen AG.
satelettronica

60 Touareg R50 from model year 2008

General

Volkswagen vehicles are built according to the latest findings in safety engineering. To keep it that way, we recommend the use of only genuine Volkswagen spare parts. You can recognise this by the VW Audi logo and by the part number. It has been established that these parts are reliable, safe and suitable.

Despite constant appraisal of the market, we cannot assess other products on these points, even when in isolated cases they have been passed by official inspectors or have been granted official approval. Therefore, we cannot, of course, assume any liability if these products are installed.

> ⚠ **WARNING**
>
> *The products from Volkswagen genuine parts and Votex genuine accessories may differ in fitting requirements, torque specifications and so on.*
>
> *Always follow the respective fitting and operating instructions.*

The wheel and tyre combinations or changes listed in the vehicle tables refer exclusively to Volkswagen Genuine wheels. Approval of wheel and tyre combinations or a change to wheels from the accessories trade is not possible with the parts certificate attached here.

> ⚠ **WARNING**
>
> *The fitting instructions and torque specifications for wheels from Votex genuine accessories may differ from those intended for wheels from Volkswagen genuine parts.*
>
> *Therefore, always observe the torque settings for the wheel bolts as well as the respective fitting and operating instructions.*

60.1 Touareg R50, type 7L model year 2008 to model year 2010

Appendix for parts certificate 3531/09

The parts certificate can be found on the Volkswagen ServiceNet under Accessories/Tyres, Wheels and Tyres, Wheels and Tyres Guide.

Type Approval No.: e1*2001/116*0203*17 to e1*2001/116*0203*23

Overview

Model engine output	Tyres	Tyre size	Wheel rim	Off-set in mm	Snow chains	Remarks
5.0l V10 TDI 258 kW diesel engine	Standard tyres	295/35 R 21 107Y	10 J x 21 ⇒ page 631	50	No	General information on: ◆ Winter tyres ⇒ page 15 ◆ Snow chains ⇒ page 18

Protected by copyright. Copying for private or commercial purposes, in whole or in part, is not permitted unless authorised by Volkswagen AG. Volkswagen AG does not guarantee or accept any liability with respect to the correctness of information in this document. Copyright by Volkswagen AG.
satelettronica

Model engine output	Tyres	Tyre size	Wheel rim	Off-set in mm	Snow chains	Remarks
	Modification	275/40 R 20 106Y	9 J x 20 ⇒ page 630	60	No	Tyre makes recommended by Volkswagen: ◆ Summer tyres ⇒ page 666 ◆ Winter tyres ⇒ page 694 * If off-road tyres (with M+S identification) are used, a sticker in the driver's field of vision making reference to the lower permitted maximum speed according to the speed rating of the tyre (T/H) is required, just as for winter tyres. ** Wheel 7L9 601 025 B (9J x 19 offset 60) is not authorised as a winter wheel.
		275/40 R 20 106Y	$9^1/_2$ J x 20 ⇒ page 631	52	No	
	Cross country tyres* ⇒ page 628	255/50 R 19 107V	9 J x 19 ⇒ page 628	60	Yes	
	Winter tyres** ⇒ page 628	255/50 R 19 107V	9 J x 19 ⇒ page 628	60	Yes	

Tyre inflation pressures are located on a sticker in the fuel tank flap or in ⇒ Maintenance ; Booklet ; Check tyres: condition, profile, inflation pressure, depth of tread .

60.2 Wheel allocation for Touareg R50, type 7L model year 2008 to model year 2010

Explanation of information on wheels ⇒ page 59

Torque settings for wheel bolts ⇒ Running gear, axles, steering; Rep. gr. 44

Pitch circle diameter:	130
Number of wheel bolt holes:	5

Note

Currently, no steel wheel with a pitch circle diameter of 130 mm is available for the Touareg. Use the listed wheels with a pitch circle diameter of 130 mm with the sizes stated in the tyres table for winter tyres as well.

60.2.1 9 J x 19

Caution

Observe the allocation of wheels and tyres to the respective engines, which are listed in the overview table ⇒ page 627 .

Protected by copyright. Copying for private or commercial purposes, in part or in whole, is not permitted unless authorised by Volkswagen AG. Volkswagen AG does not guarantee or accept any liability with respect to the correctness of information in this document. Copyright by Volkswagen AG.
satelettronica

Protected by copyright. Copying for private or commercial purposes, in part or in whole, is not permitted unless authorised by Volkswagen AG. Volkswagen AG does not guarantee or accept any liability with respect to the correctness of information in this document. Copyright by Volkswagen AG.

7L6 601 025 D - Wheel and tyre combination ⇒ page 628

Size:	9 J x 19
Wheel offset in mm:	60
Wheel load in kg:	900

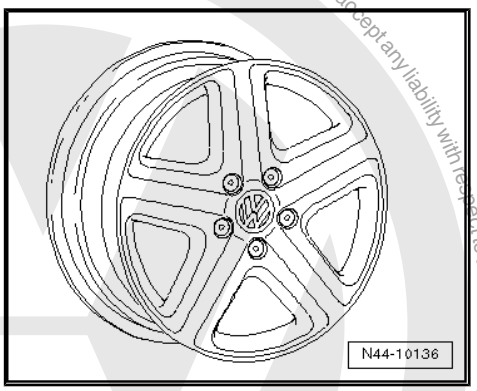

7L6 601 025 S - Wheel and tyre combination ⇒ page 628

Size:	9 J x 19
Wheel offset in mm:	60
Wheel load in kg:	900

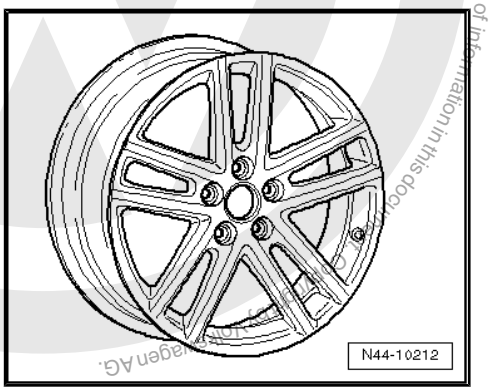

7L6 601 025 R - Wheel and tyre combination ⇒ page 628

Size:	9 J x 19
Wheel offset in mm:	60
Wheel load in kg:	900

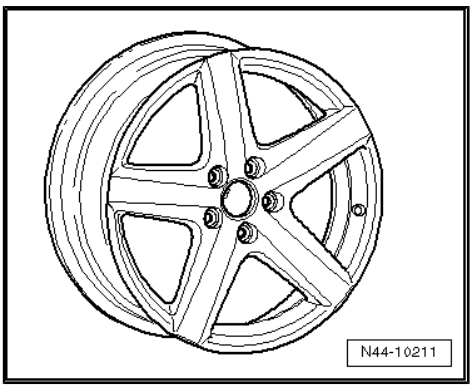

7L6 601 025 AM - Wheel and tyre combination ⇒ page 628

Size:	9 J x 19
Wheel offset in mm:	60
Wheel load in kg:	900

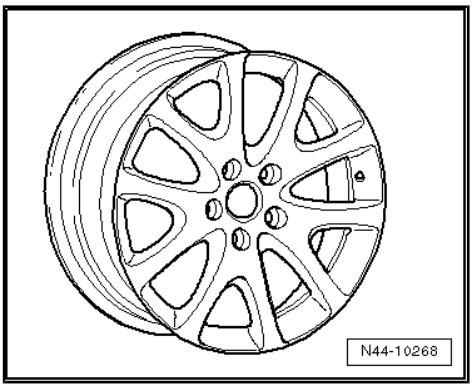

satelettronica

7L9 601 025 B - Wheel and tyre combination ⇒ page 628

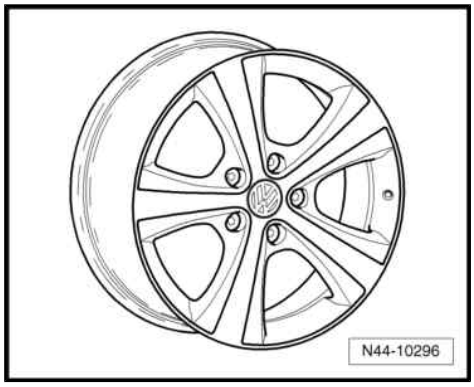

Note

Not authorised as a winter wheel.

Size:	9 J x 19
Wheel offset in mm:	60
Wheel load in kg:	900

60.2.2 9 J x 20

Caution

Observe the allocation of wheels and tyres to the respective engines, which are listed in the overview table ⇒ page 627 .

7L6 601 025 P - Wheel and tyre combination ⇒ page 628

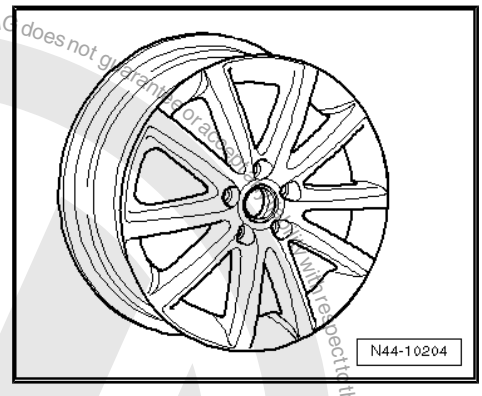

Size:	9 J x 20
Wheel offset in mm:	60
Wheel load in kg:	900

7L6 601 025 Q - Wheel and tyre combination ⇒ page 628

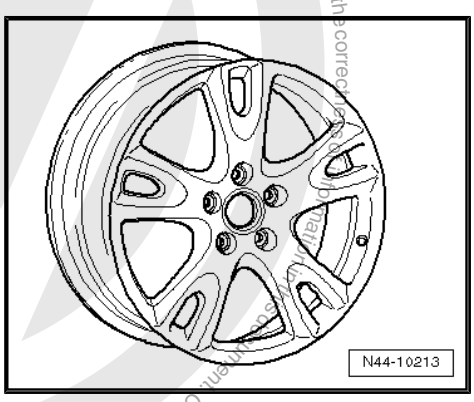

Size:	9 J x 20
Wheel offset in mm:	60
Wheel load in kg:	900

7L6 601 025 AN - Wheel and tyre combination ⇒ page 628

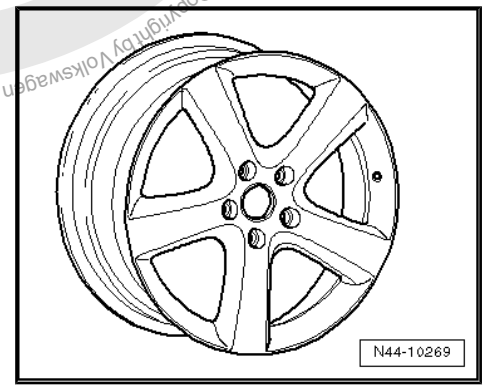

Size:	9 J x 20
Wheel offset in mm:	60
Wheel load in kg:	900

Protected by copyright. Copying for private or commercial purposes, in part or in whole, is not permitted unless authorised by Volkswagen AG. Volkswagen AG does not guarantee or accept any liability with respect to the correctness and completeness of this document. Copyright by Volkswagen AG.
satelettronica

7L6 601 025 AP - Wheel and tyre combination ⇒ page 628

Size:	9 J x 20
Wheel offset in mm:	60
Wheel load in kg:	900

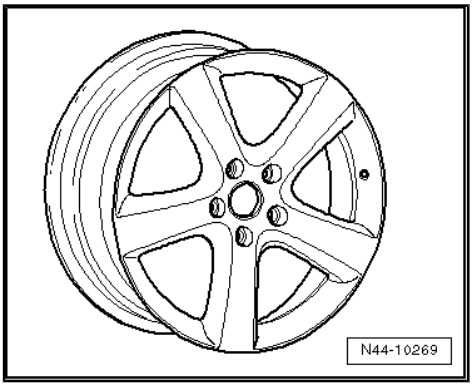

7L9 601 025 C - Wheel and tyre combination ⇒ page 628

Size:	9 J x 20
Wheel offset in mm:	60
Wheel load in kg:	900

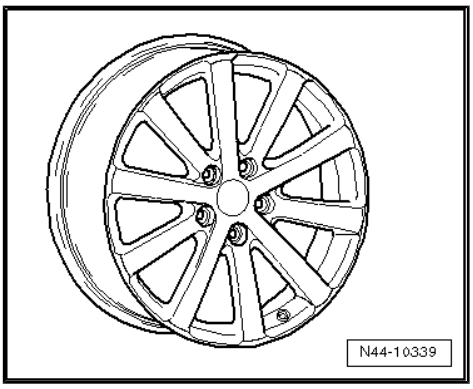

60.2.3 9 1/2 J x 20

Caution

Observe the allocation of wheels and tyres to the respective engines, which are listed in the overview table ⇒ page 627 *.*

7L9 601 025 - Wheel and tyre combination ⇒ page 628

Size:	9 1/2 J x 20
Wheel offset in mm:	52
Wheel load in kg:	900

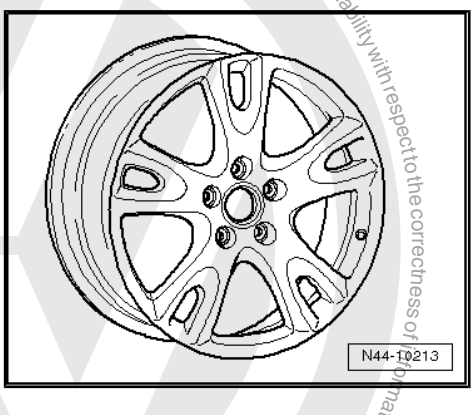

60.2.4 10 J x 21

Caution

Observe the allocation of wheels and tyres to the respective engines, which are listed in the overview table ⇒ page 627 *.*

Protected by copyright. Copying for private or commercial purposes, in part or in whole, is not permitted unless authorised by Volkswagen AG. Volkswagen AG does not guarantee or accept any liability with respect to the correctness of information in this document. Copyright by Volkswagen AG.
satelettronica

7L9 601 025 D - Wheel and tyre combination ⇒ page 627

Size:	10 J x 21
Wheel offset in mm:	50
Wheel load in kg:	900

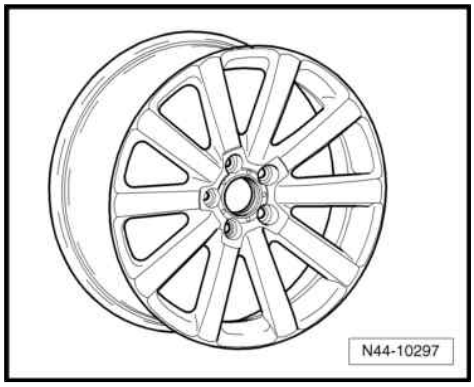

Protected by copyright. Copying for private or commercial purposes, in part or in whole, is not permitted unless authorised by Volkswagen AG. Volkswagen AG does not guarantee or accept any liability with respect to the correctness of information in this document. Copyright by Volkswagen AG.

satelettronica

61 Breakdown set for VW Vehicles

Refer to ⇒ Electronic parts catalogue “ETKA” for replacement part numbers.

Protected by copyright. Copying for private or commercial purposes, in part or in whole, is not permitted unless authorised by Volkswagen AG. Volkswagen AG does not guarantee or accept any liability with respect to the correctness of information in this document. Copyright by Volkswagen AG.

satelettronica

62 Temporary spare tyres and wheels for VW vehicles

Observe the notes on the use of temporary spare wheels
⇒ page 70 .

Refer to ⇒ Electronic parts catalogue “ETKA” for replacement part numbers.

	Wheel rim	Tyres		
Model	**Size**	**Size**	**Make**	**Tread**
Lupo,type 6X	3 1/2 J x 14 offset 42	T105/70 R 14 84M	Continental Michelin	CST 17 TEX
Polo,type 6N	3 1/2 J x 14 offset 42 3 1/2 J x 14 offset 45	T105/70 R 14 84M	Continental Michelin Firestone	CST 17 TEX Temporary spare
Polo Classic, type 6KV; Polo Variant, type 6KV	3 1/2 J x 14 offset 38	T105/70 R 14 84M	Continental Michelin Firestone	CST 17 TEX Temporary spare
Golf, Golf Cabriolet, Type 1HX0 With 4 holes (basic running gear)	3 1/2 J x 14 offset 40 3 1/2 J x 14 offset 45	T105/70 R 14 84M	Continental Michelin Firestone	CST 17 TEX Temporary spare
Golf Cabriolet, type 1E	3 1/2 J x 14 offset 45	T105/70 R 14 84M	Continental Michelin Firestone	CST 17 TEX Temporary spare
Golf, type 1HX0/1H with 5 holes (Plus running gear) Vento, type 1HX0/1H with 4 holes Golf Variant, type 1HX0/1H with 4 holes	3 1/2 J x 15 offset 38 3 1/2 J x 15 offset 40	T115/70 R 15 90M	Continental Michelin Goodyear	CST 17 TEX HPS
Golf Syncro, type 1HX1 Golf Variant Syncro, type 1HX1 with 4 holes	3 1/2 J x 15 offset 40	T125/75 R 15 95M	Continental	CST 17
Golf, type 1HX0/1H GTI, 16V, VR6 from 01.95 Vento VR6, type 1HX0/1H	3 1/2 J x 16 offset 38	T125/70 R 16 96M	Continental	CST 17
Golf VR6 Syncro, type 1HX1 Golf Variant VR6 Syncro, type 1HX1	3 1/2 J x 16 offset 38	T125/80 R 15 95M	Continental	CST 17
Golf, type 1K	3 1/2 J x 18 offset 25	T125/70 R 18 99M	Goodyear Continental	Conv. Spare CST 17
	3 1/2 J x 16 wheel offset 25 1) 2)	T125/70 R 16 96M	Continental Hankook Kumho	CST 17 S300 121
Golf Plus/CrossGolf, model 1KP	3 1/2 J x 18 offset 25	T125/70 R 18 99M	Goodyear Continental	Conv. Spare CST 17

Protected by copyright. Copyright by Volkswagen AG.
Copying for private or commercial purposes, in any form or by any means, is not permitted unless authorised by Volkswagen AG. Volkswagen AG does not guarantee or accept any liability with respect to the correctness of information in this document.

satelettronica

	Wheel rim	Tyres		
Model	**Size**	**Size**	**Make**	**Tread**
	3 1/2 J x 16 wheel offset 25 [1]	T125/70 R 16 96M	Continental Hankook Kumho	CST 17 S300 121
Golf Variant, type 1HX0/1H with 4 holes	3 1/2 J x 15 offset 40	T115/70 R 15 90M	Continental Michelin Goodyear	CST 17 TEX HPS
Golf, Bora, Golf Variant, Bora Variant, type 1J front and four-wheel drive	3 1/2 J x 18 offset 38	T125/70 R 18 99M	Continental	CST 17
Golf Variant, type 1KM	3 1/2 J x 18 offset 25	T125/70 R 18 99M	Goodyear Continental	Conv. Spare CST 17
Jetta, type 1KM	3 1/2 J x 18 offset 25	T125/70 R 18 99M	Goodyear Continental	Conv. Spare CST 17
New Beetle, type 9C	3 1/2 J x 18 offset 38	T125/70 R 18 99M	Continental	CST 17
New Beetle RSi, type 9CR	3 1/2 J x 18 offset 38	T125/70 R 18 99M	Continental	CST 17
Passat, type 35I	3 1/2 J x 15 offset 40	T125/70 R 15 95M	Continental Michelin Firestone	CST 17 TEX Temporary spare
Passat Syncro, type 35I-299	3 1/2 J x 15 offset 40	T125/80 R 15 95M	Continental	CST 17
Passat, type 35I 81 kW TDI, 16V and VR6	3 1/2 J x 16 offset 38	T125/70 R 16 96M	Continental	CST 17
Passat, type 3B	4.00 B x 15 offset 45	T125/90 R 15 95M	Michelin	TEX
Passat from model year 2001, Type 3BG	3 1/2 J x 18 offset 40	T125/70 R 18 99M	Continental	CST 17
	Some vehicles have a 205/55 R 16 tyre on a 7 J x 16 offset 37 steel rim as a spare wheel. Observe notes on the use of temporary spare wheels ⇒ page 70 .			
Passat W8, type 3BS	3 1/2 J x 18 offset 40	T125/70 R 18 99M	Continental	CST 17
Touareg, type 7L pitch circle 120 mm	6 1/2 J x 17 offset 40	195/80 R 17 106 P folding tyre	Vredestein	Spacemaster
Touareg, type 7L pitch circle 130 mm	6 1/2 J x 17 offset 40	195/80 R 17 106 P folding tyre	Vredestein	Spacemaster
	6 1/2 J x 18 offset 53	195/75 R 18 106 P folding tyre	Vredestein	Spacemaster

[1] for vehicles with a towing attachment.

[2] not for vehicles with 4Motion

Protected by copyright. Copying for private or commercial purposes, in part or in whole, is not permitted unless authorised by Volkswagen AG. Volkswagen AG does not give any guarantee or accept any liability with respect to the correctness of information in this document. Copyright by Volkswagen AG.

satelettronica

Volkswagen AG. Volkswagen AG does not guarantee or accept any liability with respect to the correctness of information in this document. Copyright by Volkswagen AG.

63 Recommended summer tyres

Notes regarding the recommended makes of summer tyre

- Tyres are one of the most important elements in motor vehicle construction and have a major influence on road safety. Therefore, they must fulfil numerous conditions which are specified for tyre manufacturers in the DIN (German industrial standards) and the directives of the German rubber industry e. V. (W.d.K.). In addition, comprehensive testing is carried out at Volkswagen before tyres are approved for initial fitting on our vehicles.
- The following lists all tyre makes and tread patterns that are fitted to VW vehicles ex-factory, correct at the time of publication.
- These tyre makes/tread patterns meet the aforementioned demands. We therefore recommend the tyres/tread types listed in this guide are chosen as replacements.
- Observe special requirements for tyres with run-flat properties ⇒ page 55 .

63.1 Summer tyres for Lupo 3L model year 1999 to model year 2005

Observe the notes regarding the recommended makes of summer tyres ⇒ page 636

Tyre size	Make	Tread pattern
155/65 R 14 75T	Bridgestone	B 381 Ecopia

63.2 Summer tyres for Lupo FSI model year 1999 to model year 2005

Observe the notes regarding the recommended makes of summer tyres ⇒ page 636

Tyre size	Make	Tread pattern
175/60 R 14 79H	Dunlop	SP 10A

63.3 Summer tyres for Lupo GTI model year 1999 to model year 2005

Observe the notes regarding the recommended makes of summer tyres ⇒ page 636

Tyre size	Make	Tread pattern
205/45 R 15 81V	Dunlop	SP 2000 E

63.4 Summer tyres for Lupo model year 1999 to model year 2005

Observe the notes regarding the recommended makes of summer tyres ⇒ page 636

Tyre size	Make	Tread pattern
155/70 R 13 75T	Continental	Eco Contact EP
	Firestone	F 580
	Michelin	XT1
	Hankook	K701
175/65 R 13 80T	Continental	Eco Contact EP

satelettronica

Tyre size	Make	Tread pattern
	Firestone	F 580
	Michelin	XT1
185/55 R 14 80H	Continental	Eco Contact CP
	Firestone	FH 700 F
	Michelin	XH1
	Dunlop	SP Sport 2000 E
195/45 R 15 78V	Michelin	Pilot SX GT
	Dunlop	SP Sport 2040 E
	Pirelli	P 6000

63.5 Summer tyres for Fox from model year 2005

Observe the notes regarding the recommended makes of summer tyres ⇒ page 636

Tyre size	Make	Tread pattern
165/70 R 14 81T	Continental	Eco Contact 3
	Michelin	Energy3
185/60 R 14 82H	Continental	CPC
195/55 R 15 85H	Michelin	Energy Saver
	Bridgestone	8250
	Dunlop	Sport 01A

63.6 Summer tyres for Polo model year 1995 to model year 2001

Observe the notes regarding the recommended makes of summer tyres ⇒ page 636

Tyre size	Make	Tread pattern
155/70 R 13 75T	Continental	Eco Contact EP
	Firestone	F 580
	Michelin	Energy XT1
175/65 R 13 80T	Continental	Eco Contact EP
	Firestone	F 580
	Michelin	MXT Energy XT1
185/55 R 14 79H	Continental	CH 90
	Firestone	FH 700 FS
	Michelin	SX GT
	Dunlop	SP Sport 2000 E
185/55 R 14 80H	Continental	Eco Contact CP
	Firestone	FH 700 F
	Michelin	XH1
	Dunlop	SP Sport 2000 E
195/45 R 15 78V	Michelin	Pilot SX GT
	Dunlop	SP Sport 2040 E
	Pirelli	P 6000

satelettronica

63.7 Summer tyres for Polo saloon/sedan model year 2004 to model year 2005

Observe the notes regarding the recommended makes of summer tyres ⇒ page 636

Tyre size	Make	Tread pattern
155/80 R 13 79T	Firestone	F 590
	Hankook	K 701
165/70 R 14 81T	Continental	CEC CP
	Firestone	F 590
	Goodyear	GT 2E
	Michelin	XT1
	Dunlop	SP 10A
185/60 R 14 82T	Continental	CEC CP
	Dunlop	SP 10E
	Firestone	F 590
	Michelin	XT 2
	Kumho	PM 769
185/60 R 14 82H	Continental	CEC CP
	Continental	Premium Co
	Dunlop	SP 2000 E
	Firestone	F 590
	Goodyear	NCT 5
	Michelin	XH 1
	Kumho	PM 769
195/50 R 15 82V	Bridgestone	Turanza ER 30
	Dunlop	SP 2020 E
	Goodyear	NCT 5
	Michelin	Primacy
	Pirelli	P 6000
195/55 R 15 85V	Michelin	Pilot Primacy
	Dunlop	SP 2000 E
	Goodyear	NCT 5
	Firestone	FH 700 FS
205/45 R 16 83W	Bridgestone	Turanza ER 30
	Continental	Sport Contact
	Dunlop	SP 2000 E
	Hankook	Optimo K406
	Michelin	Primacy

63.8 Summer tyres for Polo Classic model year 1996 to model year 2002

Observe the notes regarding the recommended makes of summer tyres ⇒ page 636

Tyre size	Make	Tread pattern
175/65 R 14 86T	Firestone	F 580
	Michelin	Agillis
185/60 R 14 82T	Continental	Eco Contact EP
	Michelin	MXT Energy

Protected by copyright. Copying for private or commercial purposes, in part or in whole, is not permitted unless authorised by Volkswagen AG. Volkswagen AG does not guarantee or assume liability with respect to the correctness of information in this document. Copyright by Volkswagen AG.

satelettronica

Tyre size	Make	Tread pattern
	Pirelli	P 3000
185/60 R 14 82H	Continental	CH 90
	Dunlop	D8 M2
	Michelin	MXV3A Energy
185/55 R 15 81H	Michelin	MXV3A Energy
	Firestone	FH 700
185/55 R 15 82H	Pirelli	P 6000
	Firestone	FH 700

63.9 Summer tyres for Polo Variant model year 1998 to model year 2002

Observe the notes regarding the recommended makes of summer tyres ⇒ page 636

Tyre size	Make	Tread pattern
175/65 R 14 86T	Firestone	F 580
	Michelin	Agillis
185/60 R 14 82T	Continental	Eco Contact EP
	Michelin	MXT Energy
	Pirelli	P 3000
185/60 R 14 82H	Continental	CH 90
	Dunlop	D8 M2
	Michelin	MXV3A Energy
185/55 R 15 81H	Michelin	MXV3A Energy
	Firestone	FH 700
185/55 R 15 82H	Pirelli	P 6000
	Firestone	FH 700

63.10 Summer tyres for Polo from model year 2002

Observe the notes regarding the recommended makes of summer tyres ⇒ page 636

Tyre size	Make	Tread pattern	Remarks
155/80 R 13 79T	Firestone	F 590	
	Hankook	K 701	
165/70 R 14 81T	Michelin	XT1	
	Michelin	Energy 3	
	Firestone	F 590	
	Goodyear	GT 2E	
	Continental	Euro Contact 3	
	Dunlop	SP 10A	
	Pirelli	P 4	
185/60 R 14 82T	Continental	Euro Contact 3	
	Michelin	XT 2	
	Pirelli	P 6	
	Dunlop	SP 10E	
	Firestone	F 590	

Protected by copyright. Copying for private or commercial purposes, in part or in whole, is not permitted unless authorised by Volkswagen AG. Volkswagen AG does not guarantee or accept any liability with respect to the correctness of information in this document. Copyright by Volkswagen AG

satelettronica

Tyre size	Make	Tread pattern	Remarks
	Kumho	PM 769	
	Matador	MP 42	
185/60 R 14 82H	Continental	CEC CP	
	Continental	Premium Co	
	Michelin	Energy 3A	
	Goodyear	NCT 5	
	Pirelli	P 6	
	Dunlop	SP 2000 E	
	Kumho	KH15	
	Kumho	PM 769	
	Firestone	F 590	
195/50 R 15 85H	Bridgestone	Turanza ER 300	
	Dunlop	SP01	Tyres with run-flat properties ⇒ page 55
195/55 R 15 85V	Michelin	Pilot Primacy	
	Pirelli	P 6	
	Dunlop	SP 2000 E	
	Goodyear	NCT 5	
	Firestone	FH 700 FS	
	Continental	Premium Contact 2	
	Dunlop	SP01	Tyres with run-flat properties ⇒ page 55
205/45 R 16 83W	Bridgestone	Turanza ER 300	
	Continental	Sport Contact 2	
	Dunlop	SP 2000 E	
	Dunlop	SportMaxx	
	Hankook	Optimo K406	
	Michelin	Primacy	

63.11 Summer tyres for Polo Fun model year 2004 to model year 2005

Observe the notes regarding the recommended makes of summer tyres ⇒ page 636

Tyre size	Make	Tread pattern
215/40 ZR 17 83W	Dunlop	SP 9000
	Dunlop	SportMaxx

63.12 Summer tyres for CrossPolo from model year 2006

Observe the notes regarding the recommended makes of summer tyres ⇒ page 636

Tyre size	Make	Tread pattern
215/40 ZR 17 83W	Dunlop	SP 9000
	Dunlop	SportMaxx

Protected by copyright. Copyright by Volkswagen AG. Volkswagen AG does not guarantee or accept any liability with respect to the correctness of information in this document. Copying for private or commercial purposes, in part or in whole, is not permitted unless authorised by Volkswagen AG.
satelettronica

63.13 Summer tyres for Polo BlueMotion from model year 2007

Observe the notes regarding the recommended makes of summer tyres ⇒ page 636

Tyre size	Make	Tread pattern
165/70 R 14 81T	Dunlop	SP 10A
	Continental	Euro Contact 3
	Firestone	F 590
	Goodyear	GT 2E
	Michelin	XT1
	Michelin	Energy 3
	Pirelli	P 4

63.14 Summer tyres for Polo GTI from model year 2007

Observe the notes regarding the recommended makes of summer tyres ⇒ page 636

Tyre size	Make	Tread pattern
205/45 R 16 83W	Bridgestone	Turanza ER 300
	Continental	Sport Contact 2
	Dunlop	SP 2000 E
	Dunlop	SportMaxx
	Hankook	Optimo K406
	Michelin	Primacy
205/45 R 17 84W	Dunlop	SportMaxx

63.15 Summer tyres for Polo GTI Cup Edition from model year 2007

Observe the notes regarding the recommended makes of summer tyres ⇒ page 636

Tyre size	Make	Tread pattern
205/45 R 16 83W	Bridgestone	Turanza ER 300
	Continental	Sport Contact 2
	Dunlop	SP 2000 E
	Dunlop	SportMaxx
	Hankook	Optimo K406
	Michelin	Primacy
205/45 R 17 84W	Dunlop	SportMaxx

63.16 Summer tyres for Golf, Vento model year 1992 to model year 1998

Observe the notes regarding the recommended makes of summer tyres ⇒ page 636

Tyre size	Make	Tread pattern
175/70 R 13 82T	Continental	CT 22
	Continental	Eco Contact CP
	Michelin	MXT Energy

Protected copyright. Copying for private or commercial purposes, in part or in whole, is not permitted unless authorised by Volkswagen AG. Volkswagen AG does not guarantee or assume any liability with respect to the correctness of information.
satelettronica

Tyre size	Make	Tread pattern
185/60 R 14 82T	Continental	Eco Contact CP
	Michelin	MXT Energy
	Firestone	F 580
185/60 R 14 82H	Continental	CH 90
	Dunlop	SP Sport D8 M2
	Michelin	MXV3A Energy
195/60 R 14 86H	Continental	CH 90
	Continental	Eco Contact CP
	Michelin	Energy XH 1
195/50 R 15 82V	Continental	CV 90
	Dunlop	SP 2000
	Michelin	MXV3A Energy
	Fulda	Y 2000 + A
205/50 R 15 86V	Dunlop	SP Sport 2000
	Michelin	MXV3A Energy
	Firestone	FH 690
	Fulda	Y 2000 + A
205/50 R 15 86W	Michelin	MXV3A Energy
	Dunlop	SP Sport 2000
205/45 R 16 83V/W	Dunlop	SP Sport 2000 E
215/40 R 16 86W (reinforced) Extraload	Dunlop	SP Sport 2040 E

63.17 Summer tyres for Golf Variant model year 1994 to model year 1998

Observe the notes regarding the recommended makes of summer tyres ⇒ page 636

Tyre size	Make	Tread pattern
175/70 R 13 82T	Continental	CT 22
	Continental	Eco Contact CP
	Michelin	MXT Energy
185/60 R 14 82T	Continental	Eco Contact CP
	Michelin	MXT Energy
	Firestone	F 580
185/60 R 14 82H	Continental	CH 90
	Dunlop	SP Sport D8 M2
	Michelin	MXV3A Energy
195/60 R 14 86H	Continental	CH 90
	Continental	Eco Contact CP
	Michelin	Energy XH 1
195/50 R 15 82V	Continental	CV 90
	Dunlop	SP 2000
	Michelin	MXV3A Energy
	Fulda	Y 2000 + A
205/50 R 15 86V	Dunlop	SP Sport 2000
	Michelin	MXV3A Energy

Volkswagen AG. Volkswagen AG does not guarantee or accept any liability with respect to the correctness of information in this document. Copyright by Volkswagen AG. Protected by copyright. Copying for private or commercial purposes, in part or in whole, is not permitted unless authorized by Volkswagen AG.
satelettronica

Tyre size	Make	Tread pattern
	Firestone	FH 690
	Fulda	Y 2000 + A
205/50 R 15 86W	Michelin	MXV3A Energy
	Dunlop	SP Sport 2000
205/45 R 16 83V/W	Dunlop	SP Sport 2000 E
215/40 R 16 86W (reinforced) Extraload	Dunlop	SP Sport 2040 E

63.18 Summer tyres for Golf cabriolet model year 1994 to model year 1997

Observe the notes regarding the recommended makes of summer tyres ⇒ page 636

Tyre size	Make	Tread pattern
185/60 R 14 82T	Continental	Eco Contact CP
	Michelin	MXT Energy
	Firestone	F 580
185/60 R 14 82H	Continental	CH 90
	Dunlop	SP Sport D8 M2
	Michelin	MXV3A Energy
195/50 R 15 82V	Continental	CV 90
	Dunlop	SP 2000
	Michelin	MXV3A Energy
	Fulda	Y 2000 + A
205/45 R 16 83V/W	Dunlop	SP Sport 2000 E

63.19 Summer tyres for Golf, Golf 4Motion model year 1998 to model year 2004

Observe the notes regarding the recommended makes of summer tyres ⇒ page 636

Tyre size	Make	Tread pattern	Remarks
175/80 R 14 88T	Michelin	XT 1	
	Firestone	F 580-FS	
	Continental	Eco Contact EP	
	Goodyear	GT2E	
	Dunlop	SP 10 3e	
175/80 R 14 88H	Dunlop	SP Sport 200 E	
	Firestone	F 580	
	Continental	Eco Contact CP	
	Michelin	XH1	
	Toyo	TYJ35	
	Dunlop	SP Sport 200 ULW (ultra light weight)	Low-friction tyres
195/65 R 15 91T	Continental	Eco Contact EP	
	Dunlop	SP 9*E	
	Michelin	XT 2	
	Goodyear	GT 2E	

Volkswagen AG. Volkswagen AG does not guarantee or accept any liability with respect to the correctness of information in this document. Copyright by Volkswagen AG. Protected by copyright. Copying for private or commercial purposes, in part or in whole, is not permitted unless authorised by Volkswagen AG.
satelettronica

Protected by copyright. Copying for private or commercial purposes, in part or in whole, is not permitted unless authorised by Volkswagen AG. Volkswagen AG does not guarantee or accept any liability with respect to the correctness of information in this document. Copyright by Volkswagen AG.

Tyre size	Make	Tread pattern	Remarks
	Firestone	F 580	
	Pirelli	P 3000	
195/65 R 15 91H	Michelin	XH1	
	Dunlop	SP 200 E	
	Goodyear	NCT 5	
195/65 R 15 91V	Continental	Eco Contact CP	
	Goodyear	NCT 5	
	Michelin	Primacy	
	Dunlop	SP Sport 200 E	
	Pirelli	P 6000	
	Kleber	Dynaxer HP	
	Firestone	FH 680 B	
	Dunlop	SP Sport 200 ULW (ultra light weight)	Low-friction tyres
205/55 R 16 91W	Continental	Sport Contact	These tyres are permitted only in conjunction with modified full-size hubcaps, in use from 11.99;
	Dunlop	SP Sport 2000 E	Also see ⇒ Technical Service Handbook
	Bridgestone	ER 30	
	Michelin	MXM	
	Goodyear	NCT 5	
	Pirelli	P 6000	
225/45 R 17 91W/Y	Continental	Sport Contact	
	Dunlop	SP 9090	
	Pirelli	P 6000	
	Michelin	Pilot Sport	
	Bridgestone	Potenza RE 040	
	Goodyear	NCT 5	

63.20 Summer tyres for Golf model year 2004 to model year 2009

Observe the notes regarding the recommended makes of summer tyres ⇒ page 636

Tyre size	Make	Tread pattern	Remarks
195/65 R 15 91T	Goodyear	GT 3	
	Michelin	Energy 3	
	Hankook	K406	
	Continental	CEC3	
195/65 R 15 91H	Pirelli	P 7	
	Michelin	Energy 3	
	Goodyear	NCT 5	
	Hankook	K405	
	Bridgestone	B 390	
	Bridgestone	ER 300	
	Continental	Eco Contact 3	
	Michelin	MXV4 S8	For USA

satelettronica

Tyre size	Make	Tread pattern	Remarks
	Goodyear	Eagle LS	Tyres with run-flat properties ⇒ page 55
	Continental	Pro Contact	
195/65 R 15 91V	Pirelli	P 6000	
	Goodyear	NCT 5	
	Michelin	Energy 3	
	Bridgestone	B 390	
	Bridgestone	ER 300	
	Continental	Premium Contact	
205/55 R 16 91H	Michelin	MXV4 S8	For USA Tyres with run-flat properties ⇒ page 55
	Goodyear	Eagle LS	
	Bridgestone	EL 400	
	Continental	Pro Contact	
	Hankook	Optima H725H	
205/55 R 16 91V	Pirelli	P 7	
	Hankook	K105	
	Goodyear	NCT 5	
	Bridgestone	ER 30	
	Bridgestone	ER 300	
	Michelin	Energy 3	
	Continental	Sport Contact 2	
	Dunlop	Sport 01A	
	Bridgestone	ER 300 RFT	Tyres with run-flat properties ⇒ page 55
205/55 R 16 91W	Pirelli	P 7	
	Goodyear	NCT 5	
	Bridgestone	ER 30	
	Bridgestone	ER 300	
225/45 R 17 91W	Bridgestone	RE 40	
	Bridgestone	RE 50	
	Michelin	Primacy	
	Continental	Sport Contact 2	
	Dunlop	SP Sport 01A	
	Pirelli	P Zero Rosso	
225/45 R 17 91H	Michelin	MXM 4	For USA Tyres with run-flat properties ⇒ page 55
	Goodyear	Eagle RSA	
	Continental	Pro Contact	
225/45 R 17 94W	Michelin	Primacy	
	Pirelli	P Zero Rosso	
225/40 R 18 92H	Dunlop	Sport01 AS	For USA
	Pirelli	P Zero Nero	
225/40 R 18 92Y	Bridgestone	RE 050A	
	Michelin	Exalto 2	
	Dunlop	SportMaxx	
	Continental	Sport Contact 2	
	Pirelli	P Zero	

Protected by copyright. Copying for private or commercial purposes, in part or in whole, is not permitted unless authorised by Volkswagen AG. Volkswagen AG does not guarantee or accept any liability with respect to the correctness of information in this document. Copyright by Volkswagen AG.

satelettronica

63.21 Summer tyres for Golf BlueMotion model year 2008 to model year 2009

Observe the notes regarding the recommended makes of summer tyres ⇒ page 636

Tyre size	Make	Tread pattern
195/65 R 15 91T	Continental	Eco Contact 3
205/55 R 16 91H	Continental	Premium Contact 2

63.22 Summer tyres for Golf GTI model year 2005 to model year 2009

Observe the notes regarding the recommended makes of summer tyres ⇒ page 636

Tyre size	Make	Tread pattern
225/45 R 17 91W	Bridgestone	RE 40
	Bridgestone	RE 50
	Michelin	Primacy
	Continental	Sport Contact 2
	Dunlop	SP Sport 01A
	Pirelli	P Zero Rosso
225/40 R 18 92Y	Bridgestone	RE 050A
	Michelin	Exalto 2
	Dunlop	SportMaxx
	Continental	Sport Contact 2
	Pirelli	P Zero

63.23 Summer tyres for Pirelli Golf model year 2008 to model year 2009

Observe the notes regarding the recommended makes of summer tyres ⇒ page 636

Tyre size	Make	Tread pattern
225/45 R 17 91W	Bridgestone	RE 40
	Bridgestone	RE 50
	Michelin	Primacy
	Continental	Sport Contact 2
	Dunlop	SP Sport 01A
	Pirelli	P Zero Rosso
225/40 R 18 92Y	Bridgestone	RE 050A
	Michelin	Exalto 2
	Dunlop	SportMaxx
	Continental	Sport Contact 2
	Pirelli	P Zero

Protected by copyright. Copying for private or commercial purposes, in part, is not permitted unless authorised by Volkswagen AG. Volkswagen AG does not guarantee or accept any liability with respect to the correctness of information in this document. Copyright by Volkswagen AG.
satelettronica

63.24 Summer tyres for Golf R32 model year 2006 to model year 2009

Observe the notes regarding the recommended makes of summer tyres ⇒ page 636

Tyre size	Make	Tread pattern
225/45 R 17 94W	Michelin	Primacy
	Pirelli	P Zero Rosso
225/40 R 18 92Y	Bridgestone	RE 050A
	Michelin	Exalto 2
	Dunlop	SportMaxx
	Continental	Sport Contact 2
	Pirelli	P Zero

63.25 Summer tyres for CrossGolf from model year 2007

Observe the notes regarding the recommended makes of summer tyres ⇒ page 636

Tyre size	Make	Tread pattern	Remarks
195/65 R 15 91T	Goodyear	GT 3	
	Michelin	Energy 3	
	Hankook	K406	
	Continental	CEC3	
195/65 R 15 91H	Pirelli	P 7	
	Michelin	Energy 3	
	Goodyear	NCT 5	
	Hankook	K405	
	Bridgestone	B 390	
	Bridgestone	ER 300	
	Continental	Eco Contact 3	
	Michelin	MXV4 S8	For USA Tyres with run-flat properties ⇒ page 55
	Goodyear	Eagle LS	
	Continental	Pro Contact	
195/65 R 15 91V	Pirelli	P 6000	
	Goodyear	NCT 5	
	Michelin	Energy 3	
	Bridgestone	B 390	
	Bridgestone	ER 300	
	Continental	Premium Contact	
205/55 R 16 91H	Michelin	MXV4 S8	For USA Tyres with run-flat properties ⇒ page 55
	Goodyear	Eagle LS	
	Bridgestone	EL 400	
	Continental	Pro Contact	
	Hankook	Optima H725H	
205/55 R 16 91V	Pirelli	P 7	
	Hankook	K105	
	Goodyear	NCT 5	
	Bridgestone	ER 30	
	Bridgestone	ER 300	

Protected by copyright. Copying for private or commercial purposes, in part or in whole, is not permitted unless authorised by Volkswagen AG. Volkswagen AG does not guarantee or accept any liability with respect to the correctness of information in this document. Copyright by Volkswagen AG.

satelettronica

Tyre size	Make	Tread pattern	Remarks
	Michelin	Energy 3	
	Continental	Sport Contact 2	
	Dunlop	Sport 01A	
	Bridgestone	ER 300 RFT	Tyres with run-flat properties ⇒ page 55
205/55 R 16 91W	Pirelli	P 7	
	Goodyear	NCT 5	
	Bridgestone	ER 30	
	Bridgestone	ER 300	
225/45 R 17 91W	Bridgestone	RE 40	
	Bridgestone	RE 50	
	Michelin	Primacy	
	Continental	Sport Contact 2	
	Dunlop	SP Sport 01A	
	Pirelli	P Zero Rosso	
225/45 R 17 94W	Michelin	Primacy	
	Pirelli	P Zero Rosso	

63.26 Summer tyres for Golf Plus from model year 2005

Observe the notes regarding the recommended makes of summer tyres ⇒ page 636

Tyre size	Make	Tread pattern	Remarks
195/65 R 15 91T	Goodyear	GT 3	
	Michelin	Energy 3	
	Hankook	K406	
	Continental	CEC3	
195/65 R 15 91H	Pirelli	P 7	
	Michelin	Energy 3	
	Goodyear	NCT 5	
	Hankook	K405	
	Bridgestone	B 390	
	Bridgestone	ER 300	
	Continental	Eco Contact 3	
	Michelin	MXV4 S8	For USA Tyres with run-flat properties ⇒ page 55
	Goodyear	Eagle LS	
	Continental	Pro Contact	
195/65 R 15 91V	Pirelli	P 6000	
	Goodyear	NCT 5	
	Michelin	Energy 3	
	Bridgestone	B 390	
	Bridgestone	ER 300	
	Continental	Premium Contact	
205/55 R 16 91H	Michelin	MXV4 S8	For USA Tyres with run-flat properties ⇒ page 55
	Goodyear	Eagle LS	
	Bridgestone	EL 400	

Protected by copyright. Copying for private or commercial purposes, in part or in whole, is not permitted unless authorised by Volkswagen AG. Volkswagen AG does not guarantee or accept any liability with respect to the correctness of information in this document. Copyright by Volkswagen AG.

satelettronica

Tyre size	Make	Tread pattern	Remarks
	Continental	Pro Contact	
	Hankook	Optima H725H	
205/55 R 16 91V	Pirelli	P 7	
	Hankook	K105	
	Goodyear	NCT 5	
	Bridgestone	ER 30	
	Bridgestone	ER 300	
	Michelin	Energy 3	
	Continental	Sport Contact 2	
	Dunlop	Sport 01A	
	Bridgestone	ER 300 RFT	Tyres with run-flat properties ⇒ page 55
205/55 R 16 91W	Pirelli	P 7	
	Goodyear	NCT 5	
	Bridgestone	ER 30	
	Bridgestone	ER 300	
225/45 R 17 91W	Bridgestone	RE 40	
	Bridgestone	RE 50	
	Michelin	Primacy	
	Continental	Sport Contact 2	
	Dunlop	SP Sport 01A	
	Pirelli	P Zero Rosso	
225/45 R 17 94W	Michelin	Primacy	
	Pirelli	P Zero Rosso	
225/40 R 18 92T	Dunlop	Sport01 AS	For USA
	Pirelli	P Zero Nero	
225/40 R 18 92Y	Bridgestone	RE 050A	
	Michelin	Exalto 2	
	Dunlop	SportMaxx	
	Continental	Sport Contact 2	
	Pirelli	P Zero	

63.27 Summer tyres for Golf Plus BlueMotion from model year 2008

Observe the notes regarding the recommended makes of summer tyres ⇒ page 636

Tyre size	Make	Tread pattern
195/65 R 15 91T	Continental	Eco Contact 3
205/55 R 16 91H	Continental	Premium Contact 2

63.28 Summer tyres for Bora, Bora 4Motion model year 1999 to model year 2005

Observe the notes regarding the recommended makes of summer tyres ⇒ page 636

Tyre size	Make	Tread pattern	Remarks
195/65 R 15 91T	Continental	Eco Contact EP	

Protected by copyright. Copying for private or commercial purposes, in part or in whole, is not permitted unless authorised by Volkswagen AG. Volkswagen AG does not guarantee or accept any liability with respect to the correctness of information in this document. Copyright by Volkswagen AG.

satelettronica

Protected by copyright. Copying for private or commercial purposes, in part or in whole, is not permitted unless authorised by Volkswagen AG. Volkswagen AG does not guarantee or accept any liability with respect to the correctness of information in this document. Copyright by Volkswagen AG.

Tyre size	Make	Tread pattern	Remarks
	Dunlop	SP 9*E	
	Michelin	XT 2	
	Goodyear	GT 2E	
	Firestone	F 580	
	Pirelli	P 3000	
195/65 R 15 91H	Michelin	XH1	
	Dunlop	SP 200 E	
	Goodyear	NCT 5	
195/65 R 15 91V	Continental	Eco Contact CP	
	Goodyear	NCT 5	
	Michelin	Primacy	
	Dunlop	SP Sport 200 E	
	Pirelli	P 6000	
	Kleber	Dynaxer HP	
	Firestone	FH 680 B	
	Dunlop	SP Sport 200 ULW (ultra light weight)	Low-friction tyres
205/55 R 16 91W	Continental	Sport Contact	These tyres are permitted only in conjunction with modified full-size hubcaps, in use from 11.99;
	Dunlop	SP Sport 2000 E	Also see ⇒ Technical Service Handbook
	Bridgestone	ER 30	
	Michelin	MXM	
	Goodyear	NCT 5	
	Pirelli	P 6000	
225/45 R 17 91W/Y	Continental	Sport Contact	
	Dunlop	SP 9090	
	Pirelli	P 6000	
	Michelin	Pilot Sport	
	Bridgestone	Potenza RE 040	
	Goodyear	NCT 5	

63.29 Summer tyres for Golf Variant, Golf Variant 4Motion model year 1999 to model year 2006, Bora Variant, Bora Variant 4Motion model year 1999 to model year 2005

Observe the notes regarding the recommended makes of summer tyres ⇒ page 636

Tyre size	Make	Tread pattern	Remarks
195/65 R 15 91T	Continental	Eco Contact EP	
	Dunlop	SP 9*E	
	Michelin	XT 2	
	Goodyear	GT 2E	
	Firestone	F 580	
	Pirelli	P 3000	
195/65 R 15 91H	Michelin	XH1	

satelettronica

Tyre size	Make	Tread pattern	Remarks
	Dunlop	SP 200 E	
	Goodyear	NCT 5	
195/65 R 15 91V	Continental	Eco Contact CP	
	Goodyear	NCT 5	
	Michelin	Primacy	
	Dunlop	SP Sport 200 E	
	Pirelli	P 6000	
	Kleber	Dynaxer HP	
	Firestone	FH 680 B	
	Dunlop	SP Sport 200 ULW (ultra light weight)	Low-friction tyres
205/55 R 16 91W	Continental	Sport Contact	These tyres are permitted only in conjunction with modified full-size hubcaps, in use from 11.99;
	Dunlop	SP Sport 2000 E	Also see ⇒ Technical Service Handbook
	Bridgestone	ER 30	
	Michelin	MXM	
	Goodyear	NCT 5	
	Pirelli	P 6000	
225/45 R 17 91W/Y	Continental	Sport Contact	
	Dunlop	SP 9090	
	Pirelli	P 6000	
	Michelin	Pilot Sport	
	Bridgestone	Potenza RE 040	
	Goodyear	NCT 5	

63.30 Summer tyres for Golf R32

Observe the notes regarding the recommended makes of summer tyres ⇒ page 636

Tyre size	Make	Tread pattern
225/45 R 17 91W/Y	Continental	Sport Contact
	Dunlop	SP 9090
	Pirelli	P 6000
	Michelin	Pilot Sport
	Bridgestone	Potenza RE 040
	Goodyear	NCT 5
225/40 R 18 88Y	Michelin	Pilot Sport
	Dunlop	SP 9000

Protected by copyright. Copying for private or commercial purposes, in part or in whole, is not permitted unless authorised by Volkswagen AG. Volkswagen AG does not guarantee or accept any liability with respect to the correctness of information in this document. Copyright by Volkswagen AG.
satelettronica

63.31 Summer tyres for Golf Anniversary GTI

Observe the notes regarding the recommended makes of summer tyres ⇒ page 636

Tyre size	Make	Tread pattern
205/55 R 16 91W	Continental	Sport Contact
	Dunlop	SP Sport 2000 E
	Bridgestone	ER 30
	Michelin	MXM
	Goodyear	NCT 5
	Pirelli	P 6000
225/45 R 17 91W/Y	Continental	Sport Contact
	Dunlop	SP 9090
	Pirelli	P 6000
	Michelin	Pilot Sport
	Bridgestone	Potenza RE 040
	Goodyear	NCT 5
225/40 R 18 88Y	Michelin	Pilot Sport
	Dunlop	SP 9000
225/40 R 18 92Y XL	Goodyear	Eagle F1

63.32 Summer tyres for Golf Variant model year 2007 to model year 2010

Observe the notes regarding the recommended makes of summer tyres ⇒ page 636

Tyre size	Make	Tread pattern	Remarks
195/65 R 15 91T	Goodyear	GT 3	
	Michelin	Energy 3	
	Michelin	Energy Saver	
	Hankook	K406	
	Continental	CEC3	
195/65 R 15 91H	Pirelli	P 7	
	Michelin	Energy 3	
	Michelin	Energy Saver	
	Goodyear	NCT 5	
	Hankook	K405	
	Bridgestone	B 390	
	Bridgestone	ER 300	
	Continental	Eco Contact 3	
195/65 R 15 91V	Pirelli	P 6000	
	Goodyear	NCT 5	
	Michelin	Energy 3	
	Michelin	Energy Saver	
	Bridgestone	B 390	
	Bridgestone	ER 300	
	Continental	Premium Contact	
205/55 R 16 91V	Pirelli	P 7	
	Hankook	K105	

Protected by copyright. Copyright Volkswagen AG. Volkswagen AG does not guarantee or accept any liability with respect to the correctness of information in this document. Copying for private or commercial purposes, in part or in whole, is not permitted unless authorised by Volkswagen AG.

satelettronica

Tyre size	Make	Tread pattern	Remarks
	Goodyear	NCT 5	
	Bridgestone	ER 30	
	Bridgestone	ER 300	
	Michelin	Energy 3	
	Michelin	Energy Saver	
	Continental	Sport Contact 2	
	Dunlop	Sport 01A	
	Bridgestone	ER 300 RFT	Tyres with run-flat properties ⇒ page 55
205/55 R 16 91W	Pirelli	P 7	
	Goodyear	NCT 5	
	Bridgestone	ER 30	
	Bridgestone	ER 300	
225/45 R 17 91W	Bridgestone	RE 40	
	Bridgestone	RE 50	
	Michelin	Primacy	
	Continental	Sport Contact 2	
	Dunlop	SP Sport 01A	
	Pirelli	P Zero Rosso	
225/45 R 17 94W	Michelin	Primacy	
	Pirelli	P Zero Rosso	
225/40 R 18 92Y	Bridgestone	RE 050A	
	Michelin	Exalto 2	
	Dunlop	SportMaxx	
	Continental	Sport Contact 2	
	Pirelli	P Zero	

63.33 Summer tyres for Golf Variant BlueMotion from model year 2008

Observe the notes regarding the recommended makes of summer tyres ⇒ page 636

Tyre size	Make	Tread pattern
195/65 R 15 91T	Continental	Eco Contact 3
	Michelin	Energy Saver
205/55 R 16 91H	Continental	Premium Contact 2
	Michelin	Energy Saver

63.34 Summer tyres for Jetta Model Year 2006 to Model Year 2011

Observe the notes regarding the recommended makes of summer tyres ⇒ page 636

Tyre size	Make	Tread pattern	Remarks
195/65 R 15 91T	Continental	Eco Contact 3	
	Hankook	K415	
	Michelin	Energy 3	
	Goodyear	GT3	

Protected by copyright. Copying for private or commercial purposes, in part or in whole, is not permitted unless authorised by Volkswagen AG. Volkswagen AG does not guarantee or accept any liability with respect to the correctness of information in this document. Copyright by Volkswagen AG.

satelettronica

Tyre size	Make	Tread pattern	Remarks
	Goodyear	DuraGrip	
	Michelin	Energy Saver	Rolling resistance optimised tyres ⇒ page 58
195/65 R 15 91H	Pirelli	P 6000	
	Hankook	K415	
	Goodyear	NCT 5	
	Goodyear	DuraGrip	
	Goodyear	Excellence	
	Continental	Eco Contact 3	
	Michelin	Energy 3	
	Bridgestone	ER 300	
	Bridgestone	B 390	
	Michelin	Energy Saver	Rolling resistance optimised tyres ⇒ page 58
195/65 R 15 95H	Michelin	Energy 3	
	Bridgestone	B 390	
195/65 R 15 91V	Pirelli	P 6000	
	Goodyear	NCT 5	
	Michelin	Energy 3	
	Continental	Premium Contact	
	Bridgestone	B 390	
	Bridgestone	ER 300	
205/55 R 16 91H	Michelin	Energy Saver	Rolling resistance optimised tyres ⇒ page 58
	Goodyear	Excellence	
	Continental	Premium Contact 2	
	Dunlop	SP Sport Fast Response	
205/55 R 16 91V	Pirelli	Cinturato P7	
	Hankook	K105	
	Goodyear	NCT 5	
	Continental	Premium Contact 2	
	Michelin	Energy 3	
	Dunlop	SP Sport 01A	
	Continental	Sport Contact 2	
	Bridgestone	ER 30	
	Bridgestone	ER 300 Ecopia	
	Dunlop	SP Sport Fast Response	Rolling resistance optimised tyres ⇒ page 58
	Michelin	Energy Saver	
	Goodyear	Excellence	
205/55 R 16 94V Extra Load	Bridgestone	ER 300	
	Michelin	Energy 3	
	Michelin	Energy Saver	
	Goodyear	NCT 5	
	Goodyear	Excellence	
	Bridgestone	ER 300 RFT	Tyres with run-flat properties ⇒ page 55
225/45 R 17 91W	Michelin	Premacy HP	
	Bridgestone	RE 050	

Protected by copyright. Copying for private or commercial purposes, in part or whole, is not permitted unless authorised by Volkswagen AG. Volkswagen AG does not guarantee or accept any liability with respect to the correctness of information in this document. Copyright by Volkswagen AG.

satelettronica

Tyre size	Make	Tread pattern	Remarks
	Bridgestone	ER 300 Ecopia	
	Continental	Sport Contact 2	
	Dunlop	SP Sport 01A	
225/40 R 18 92Y	Bridgestone	RE 050A	
	Michelin	Pilot Exalto 2	
	Dunlop	SportMaxx GT	
	Continental	Sport Contact 2	

63.35 Summer tyres for Jetta BlueMotion Model Year 2008 to Model Year 2011

Observe the notes regarding the recommended makes of summer tyres ⇒ page 636

Tyre size	Make	Tread pattern	Remarks
195/65 R 15 91T	Continental	Eco Contact 3	
	Hankook	K415	
	Michelin	Energy 3	
	Goodyear	GT3	
	Goodyear	DuraGrip	
	Michelin	Energy Saver	Rolling resistance optimised tyres ⇒ page 58
195/65 R 15 91H	Pirelli	P 6000	
	Hankook	K415	
	Goodyear	NCT 5	
	Goodyear	DuraGrip	
	Goodyear	Excellence	
	Continental	Eco Contact 3	
	Michelin	Energy 3	
	Bridgestone	ER 300	
	Bridgestone	B 390	
	Michelin	Energy Saver	Rolling resistance optimised tyres ⇒ page 58
195/65 R 15 95H	Michelin	Energy 3	
	Bridgestone	B 390	
195/65 R 15 91V	Pirelli	P 6000	
	Goodyear	NCT 5	
	Michelin	Energy 3	
	Continental	Premium Contact	
	Bridgestone	B 390	
	Bridgestone	ER 300	
205/55 R 16 91H	Michelin	Energy Saver	Rolling resistance optimised tyres ⇒ page 58
	Goodyear	Excellence	
	Continental	Premium Contact 2	
	Dunlop	SP Sport Fast Response	
205/55 R 16 91V	Pirelli	Cinturato P7	
	Hankook	K105	
	Goodyear	NCT 5	
	Continental	Premium Contact 2	

Volkswagen AG. Volkswagen AG does not guarantee or accept any liability with respect to the correctness of information in this document. Copyright by Volkswagen AG. Copying for private or commercial purposes, in part or in whole, is not permitted unless authorised by Volkswagen AG.
satelettronica

Tyre size	Make	Tread pattern	Remarks
	Michelin	Energy 3	
	Dunlop	SP Sport 01A	
	Continental	Sport Contact 2	
	Bridgestone	ER 30	
	Bridgestone	ER 300 Ecopia	
	Dunlop	SP Sport Fast Response	Rolling resistance optimised tyres ⇒ page 58
	Michelin	Energy Saver	
	Goodyear	Excellence	
205/55 R 16 94V Extra Load	Bridgestone	ER 300	
	Michelin	Energy 3	
	Michelin	Energy Saver	
	Goodyear	NCT 5	
	Goodyear	Excellence	
	Bridgestone	ER 300 RFT	Tyres with run-flat properties ⇒ page 55

63.36 Summer tyres for Golf cabriolet model year 1998 to model year 2002

Observe the notes regarding the recommended makes of summer tyres ⇒ page 636

Tyre size	Make	Tread pattern	Remarks
175/80 R 14 88T	Michelin	XT 1	
	Firestone	F 580-FS	
	Continental	Eco Contact EP	
	Goodyear	GT2E	
	Dunlop	SP 10 3e	
175/80 R 14 88H	Dunlop	SP Sport 200 E	
	Firestone	F 580	
	Continental	Eco Contact CP	
	Michelin	XH1	
	Toyo	TYJ35	
	Dunlop	SP Sport 200 ULW (ultra light weight)	Low-friction tyres
195/65 R 15 91T	Continental	Eco Contact EP	
	Dunlop	SP 9*E	
	Michelin	XT 2	
	Goodyear	GT 2E	
	Firestone	F 580	
	Pirelli	P 3000	
195/65 R 15 91H	Michelin	XH1	
	Dunlop	SP 200 E	
	Goodyear	NCT 5	
195/65 R 15 91V	Continental	Eco Contact CP	
	Goodyear	NCT 5	
	Michelin	Primacy	
	Dunlop	SP Sport 200 E	
	Pirelli	P 6000	

Copyright by Volkswagen AG. Volkswagen AG does not guarantee or accept any liability with respect to the correctness of information in this document. Copyright by Volkswagen AG. Protected by copyright. Copying for private or commercial purposes, in part or in whole, is not permitted unless authorised by Volkswagen AG.
satelettronica

Tyre size	Make	Tread pattern	Remarks
	Kleber	Dynaxer HP	
	Firestone	FH 680 B	
	Dunlop	SP Sport 200 ULW (ultra light weight)	Low-friction tyres
205/55 R 16 91W	Continental	Sport Contact	These tyres are permitted only in conjunction with modified full-size hubcaps, in use from 11.99;
	Dunlop	SP Sport 2000 E	Also see ⇒ Technical Service Handbook
	Bridgestone	ER 30	
	Michelin	MXM	
	Goodyear	NCT 5	
	Pirelli	P 6000	
225/45 R 17 91W/Y	Continental	Sport Contact	
	Dunlop	SP 9090	
	Pirelli	P 6000	
	Michelin	Pilot Sport	
	Bridgestone	Potenza RE 040	
	Goodyear	NCT 5	

63.37 Summer tyres for New Beetle from model year 1999

Observe the notes regarding the recommended makes of summer tyres ⇒ page 636

Tyre size	Make	Tread pattern	Remarks
195/65 R 15 91T	Michelin	Energy 3	
	Continental	Eco Contact 3	
	Goodyear	GT 3	
	Hankook	K406	
195/65 R 15 91H	Firestone	F580	
	Continental	CH 90	
	Pirelli	P 7	
195/65 R 15 91V	Michelin	Energy 3	
	Goodyear	NCT 5	
	Continental	Premium Contact	
	Pirelli	P 6000	
	Bridgestone	B 390	
	Bridgestone	ER 300	
205/55 R 16 91V	Continental	Sport Contact 2	
	Bridgestone	ER 30	
	Bridgestone	ER 300	
	Michelin	Energy 3	
	Goodyear	NCT 5	
	Pirelli	P 7	
	Hankook	K105	
	Dunlop	Sport 01A	
225/45 R 17 91W/Y	Michelin	Pilot Sport	

Protected by copyright. Copying for private or commercial purposes, in part or in whole, is not permitted unless authorised by Volkswagen AG. Volkswagen AG does not guarantee or accept any liability with respect to the correctness of information in this document. Copyright by Volkswagen AG.

satelettronica

Tyre size	Make	Tread pattern	Remarks
	Bridgestone	Potenza RE 040	
	Continental	Sport Contact	
	Pirelli	P 6000	
	Dunlop	SP 9090	

63.38 Summer tyres for New Beetle Cabriolet from model year 2003

Observe the notes regarding the recommended makes of summer tyres ⇒ page 636

Tyre size	Make	Tread pattern	Remarks
195/65 R 15 91T	Michelin	Energy 3	
	Continental	Eco Contact 3	
	Goodyear	GT 3	
	Hankook	K406	
195/65 R 15 91H	Firestone	F580	
	Continental	CH 90	
	Pirelli	P 7	
195/65 R 15 91V	Michelin	Energy 3	
	Goodyear	NCT 5	
	Continental	Premium Contact	
	Pirelli	P 6000	
	Bridgestone	B 390	
	Bridgestone	ER 300	
205/55 R 16 91V	Continental	Sport Contact 2	
	Bridgestone	ER 30	
	Bridgestone	ER 300	
	Michelin	Energy 3	
	Goodyear	NCT 5	
	Pirelli	P 7	
	Hankook	K105	
	Dunlop	Sport 01A	
225/45 R 17 91W/Y	Michelin	Pilot Sport	
	Bridgestone	Potenza RE 040	
	Continental	Sport Contact	
	Pirelli	P 6000	
	Dunlop	SP 9090	

63.39 Summer tyres for New Beetle RSi

Observe the notes regarding the recommended makes of summer tyres ⇒ page 636

Tyre size	Make	Tread pattern
235/40 ZR 18 91W	Michelin	Pilot Sport

Protected by copyright. Copying for private or commercial purposes, in part or in whole, is not permitted unless authorised by Volkswagen AG. Volkswagen AG does not guarantee or accept any liability with respect to the correctness of information in this document. Copyright by Volkswagen AG.

satelettronica

63.40 Summer tyres for Passat model year 1994 to model year 1997

Observe the notes regarding the recommended makes of summer tyres ⇒ page 636

Tyre size	Make	Tread pattern
185/65 R 14 86T	Dunlop	SP 9
	Continental	CT 22
	Uniroyal	R380/65
	Firestone	F 560
195/60 R 14 86H	Michelin	HX MXV 3A
	Dunlop	SP Sport D8M2
	Continental	CH 90
	Firestone	FH 690
205/50 R 15 86V	Firestone	FH 690
	Dunlop	SP Sport 2000
	Michelin	HX MXV 3A
	Continental	CV 90
	Fulda	Y 2000 +
205/50 R 15 86W	Michelin	HX MXV 3A
	Dunlop	SP Sport 2000

63.41 Summer tyres for Passat model year 1997 to model year 2005

Observe the notes regarding the recommended makes of summer tyres ⇒ page 636

Tyre size	Make	Tread pattern	Remarks
195/65 R 15 91T	Dunlop	SP9 E	
	Michelin	XT 2	
	Continental	Eco Contact EP	
	Goodyear	GT 2E	
	Firestone	F 580	
	Pirelli	P 3000	
195/65 R 15 91H	Michelin	XH1	
	Dunlop	SP 200 E	
	Goodyear	NCT 5	
195/65 R 15 91V	Continental	Eco Contact CP	
	Goodyear	Eagle NCT 5	
	Michelin	Primacy	
	Dunlop	SP Sport 200 E	
	Pirelli	P 6000	
	Firestone	FH 680 B	
	Dunlop	SP Sport 200 ULW (ultra light weight)	Low-friction tyres
205/60 R 15 91V	Dunlop	SP Sport 2000 E	
	Michelin	Primacy	
	Michelin	MXV 3A	
	Continental	Eco Contact CP	
205/55 R 16 91W	Continental	Sport Contact	

Volkswagen AG. Volkswagen AG does not guarantee or accept any liability with respect to the correctness of information in this document. Copyright by Volkswagen AG. Reproduction or publication is prohibited unless authorised by Volkswagen AG. Copyright for private or commercial purposes, in part or in whole, is not permitted unless authorised by Volkswagen AG.
satelettronica

Tyre size	Make	Tread pattern	Remarks
	Bridgestone	ER 30	
	Dunlop	SP Sport 2000 E	
	Michelin	MXM	
	Goodyear	NCT 3	
	Goodyear	NCT 5	
	Pirelli	P 6000	
225/45 R 17 91Y	Michelin	Primacy	
	Bridgestone	Potenza	
	Continental	Sport C2	

63.42 Summer tyres for Passat W8

Observe the notes regarding the recommended makes of summer tyres ⇒ page 636

Tyre size	Make	Tread pattern	Remarks
215/55 R 16 93Y	Michelin	Primacy	Only for USA
	Dunlop	SP 9000	
225/45 R 17 91Y	Bridgestone	Potenza	
	Michelin	Primacy	
	Continental	Sport C2	

63.43 Summer tyres for Passat Protect

Observe the notes regarding the recommended makes of summer tyres ⇒ page 636

Tyre size	Make	Tread pattern
205/55 R 16 93W XL	Dunlop	SP Sport 2000 E
205/55 R 16 97W/Y XL	Dunlop	SP Sport 9000
215/55 R 16 93Y XL	Dunlop	SP Sport 9000

XL means “Extra Load” ⇒ page 17

63.44 Summer tyres for Passat saloon from model year 2006

Observe the notes regarding the recommended makes of summer tyres ⇒ page 636

Tyre size	Make	Tread pattern	Remarks
205/55 R 16 91H	Goodyear	Excellence	Rolling resistance optimised tyres ⇒ page 58
	Michelin	Energy Saver	
	Dunlop	SP Sport Fast Response	
	Michelin	Primacy	
	Dunlop	SP Sport 01A	
	Goodyear	NCT -6	
	Bridgestone	ER 300	
	Continental	Premium Contact2	
205/55 R 16 94V	Michelin	Primacy	

Copyright by Volkswagen AG. Volkswagen AG does not guarantee or accept any liability with respect to the correctness of information in this document. Copying for private or commercial purposes, in part or in whole, is not permitted unless authorised by Volkswagen AG.
Protected by copyright.
satelettronica

Tyre size	Make	Tread pattern	Remarks
	Michelin	Energy Saver	
	Goodyear	Excellence	
	Continental	Sport Contact 2	
	Bridgestone	ER 300	
215/55 R 16 97V	Bridgestone	ER 300 RFT	Tyres with run-flat properties ⇒ page 55
215/55 R 16 97W	Michelin	Primacy	
	Dunlop	SP Sport 01A	
	Dunlop	SP Fast Response	
	Bridgestone	ER 300	
	Continental	Premium Contact	
	Continental	Premium Contact 2	
	Pirelli	P7	
	Goodyear	Excellence	
235/45 R 17 94W	Continental	Sport Contact 3	Self-sealing tyres “ContiSeal” ⇒ Workshop manual: Running gear, axles, steering; Rep. gr. 44 ; Self-sealing tyres “Conti-Seal”
235/45 R 17 97W	Pirelli	P Zero Rosso	
	Continental	Sport Contact 2	
	Dunlop	SP Sport 1	
	Bridgestone	RE 050A	
235/40 R 18 95W	Continental	Sport Contact 3	Self-sealing tyres “ContiSeal” ⇒ Workshop manual: Running gear, axles, steering; Rep. gr. 44 ; Self-sealing tyres “Conti-Seal”
235/40 R 18 95Y	Pirelli	P Zero Rosso	
	Continental	Sport Contact 2	
	Michelin	Pilot Sport 2	
	Dunlop	SP Sport 1	

63.45 Summer tyres for Passat saloon BlueMotion from model year 2008

Observe the notes regarding the recommended makes of summer tyres ⇒ page 636

Tyre size	Make	Tread pattern	Remarks
205/55 R 16 91H	Goodyear	Excellence	Rolling resistance optimised tyres ⇒ page 58
	Michelin	Energy Saver	
	Dunlop	SP Sport Fast Response	
	Michelin	Primacy	
	Dunlop	SP Sport 01A	
	Goodyear	NCT -6	
	Bridgestone	ER 300	
	Continental	Premium Contact2	
205/55 R 16 94V	Michelin	Primacy	
	Michelin	Energy Saver	
	Goodyear	Excellence	

satelettronica

Tyre size	Make	Tread pattern	Remarks
	Continental	Sport Contact 2	
	Bridgestone	ER 300	
215/55 R 16 97V	Bridgestone	ER 300 RFT	Tyres with run-flat properties ⇒ page 55
215/55 R 16 97W	Michelin	Primacy	
	Dunlop	SP Sport 01A	
	Dunlop	SP Sport Fast Response	
	Bridgestone	ER 300	
	Continental	Premium Contact	
	Continental	Premium Contact 2	
	Pirelli	P7	
	Goodyear	Excellence	
235/45 R 17 94W	Continental	Sport Contact 3	Self-sealing tyres “ContiSeal” ⇒ Workshop manual: Running gear, axles, steering; Rep. gr. 44 ; Self-sealing tyres “Conti-Seal”
235/45 R 17 97W	Pirelli	P Zero Rosso	
	Continental	Sport Contact 2	
	Dunlop	SP Sport 1	
	Bridgestone	RE 050A	
235/40 R 18 95W	Continental	Sport Contact 3	Self-sealing tyres “ContiSeal” ⇒ Workshop manual: Running gear, axles, steering; Rep. gr. 44 ; Self-sealing tyres “Conti-Seal”
235/40 R 18 95Y	Pirelli	P Zero Rosso	
	Continental	Sport Contact 2	
	Michelin	Pilot Sport 2	
	Dunlop	SP Sport 1	

63.46 Summer tyres for Passat Variant from model year 2006

Observe the notes regarding the recommended makes of summer tyres ⇒ page 636

Tyre size	Make	Tread pattern	Remarks
205/55 R 16 91H	Goodyear	Excellence	Rolling resistance optimised tyres ⇒ page 58
	Michelin	Energy Saver	
	Dunlop	SP Sport Fast Response	
	Michelin	Primacy	
	Dunlop	SP Sport 01A	
	Goodyear	NCT -6	
	Bridgestone	ER 300	
	Continental	Premium Contact2	
205/55 R 16 94V	Michelin	Primacy	
	Michelin	Energy Saver	
	Goodyear	Excellence	
	Continental	Sport Contact 2	
	Bridgestone	ER 300	

Protected by copyright. Copying for private or commercial purposes, in part or in whole, is not permitted unless authorised by Volkswagen AG. Volkswagen AG does not guarantee or accept any liability with respect to the correctness of information in this document. Copyright by Volkswagen AG.

satelettronica

Tyre size	Make	Tread pattern	Remarks
215/55 R 16 97V	Bridgestone	ER 300 RFT	Tyres with run-flat properties ⇒ page 55
215/55 R 16 97W	Michelin	Primacy	
	Dunlop	SP Sport 01A	
	Dunlop	SP Fast Response	
	Bridgestone	ER 300	
	Continental	Premium Contact	
	Continental	Premium Contact 2	
	Pirelli	P7	
	Goodyear	Excellence	
235/45 R 17 94W	Continental	Sport Contact 3	Self-sealing tyres “ContiSeal” ⇒ Workshop manual: Running gear, axles, steering; Rep. gr. 44 ; Self-sealing tyres “Conti-Seal”
235/45 R 17 97W	Pirelli	P Zero Rosso	
	Continental	Sport Contact 2	
	Dunlop	SP Sport 1	
	Bridgestone	RE 050A	
235/40 R 18 95W	Continental	Sport Contact 3	Self-sealing tyres “ContiSeal” ⇒ Workshop manual: Running gear, axles, steering; Rep. gr. 44 ; Self-sealing tyres “Conti-Seal”
235/40 R 18 95Y	Pirelli	P Zero Rosso	
	Continental	Sport Contact 2	
	Michelin	Pilot Sport 2	
	Dunlop	SP Sport 1	

63.47 Summer tyres for Passat Variant BlueMotion from model year 2008

Observe the notes regarding the recommended makes of summer tyres ⇒ page 636

Tyre size	Make	Tread pattern	Remarks
205/55 R 16 91H	Goodyear	Excellence	Rolling resistance optimised tyres ⇒ page 58
	Michelin	Energy Saver	
	Dunlop	SP Sport Fast Response	
	Michelin	Primacy	
	Dunlop	SP Sport 01A	
	Goodyear	NCT -6	
	Bridgestone	ER 300	
	Continental	Premium Contact2	
205/55 R 16 94V	Michelin	Primacy	
	Michelin	Energy Saver	
	Goodyear	Excellence	
	Continental	Sport Contact 2	
	Bridgestone	ER 300	
215/55 R 16 97V	Bridgestone	ER 300 RFT	Tyres with run-flat properties ⇒ page 55

Protected by copyright. Copying for private or commercial purposes, in part or in whole, is not permitted unless authorised by Volkswagen AG. Volkswagen AG does not guarantee or accept any liability with respect to the correctness of information in this document. Copyright by Volkswagen AG.
satelettronica

Tyre size	Make	Tread pattern	Remarks
215/55 R 16 97W	Michelin	Primacy	
	Dunlop	SP Sport 01A	
	Dunlop	SP Fast Response	
	Bridgestone	ER 300	
	Continental	Premium Contact	
	Continental	Premium Contact 2	
	Pirelli	P7	
	Goodyear	Excellence	
235/45 R 17 94W	Continental	Sport Contact 3	Self-sealing tyres “ContiSeal” ⇒ Workshop manual: Running gear, axles, steering; Rep. gr. 44 ; Self-sealing tyres “Conti-Seal”
235/45 R 17 97W	Pirelli	P Zero Rosso	
	Continental	Sport Contact 2	
	Dunlop	SP Sport 1	
	Bridgestone	RE 050A	
235/40 R 18 95W	Continental	Sport Contact 3	Self-sealing tyres “ContiSeal” ⇒ Workshop manual: Running gear, axles, steering; Rep. gr. 44 ; Self-sealing tyres “Conti-Seal”
235/40 R 18 95Y	Pirelli	P Zero Rosso	
	Continental	Sport Contact 2	
	Michelin	Pilot Sport 2	
	Dunlop	SP Sport 1	

Protected by copyright. Copying for private or commercial purposes, in part or in whole, is not permitted unless authorised by Volkswagen AG. Volkswagen AG does not guarantee or accept any liability with respect to the correctness of information in this document. Copyright by Volkswagen AG.

63.48 Summer tyres for Passat R36 from model year 2008

Observe the notes regarding the recommended makes of summer tyres ⇒ page 636

Tyre size	Make	Tread pattern	Remarks
235/45 R 17 94W	Continental	Sport Contact 3	Self-sealing tyres “ContiSeal” ⇒ Workshop manual: Running gear, axles, steering; Rep. gr. 44 ; Self-sealing tyres “Conti-Seal”
235/45 R 17 97W	Pirelli	P Zero Rosso	
	Continental	Sport Contact 2	
	Dunlop	SP Sport 1	
	Bridgestone	RE 050A	
235/40 R 18 95W	Continental	Sport Contact 3	Self-sealing tyres “ContiSeal” ⇒ Workshop manual: Running gear, axles, steering; Rep. gr. 44 ; Self-sealing tyres “Conti-Seal”
235/40 R 18 95Y	Pirelli	P Zero Rosso	
	Continental	Sport Contact 2	
	Michelin	Pilot Sport 2	
	Dunlop	SP Sport 1	
235/35 R 19 91Y	Pirelli	P Zero	

satelettronica

Tyre size	Make	Tread pattern	Remarks
	Continental	Sport Contact 2	
	Continental	Sport Contact 3	Self-sealing tyres “ContiSeal” ⇒ Workshop manual: Running gear, axles, steering; Rep. gr. 44 ; Self-sealing tyres “Conti-Seal”

63.49 Summer tyres for Sharan from model year 1996

Observe the notes regarding the recommended makes of summer tyres ⇒ page 636

Tyre size	Make	Tread pattern
195/65 R 15 95T reinforced	Continental	CT 22
	Firestone	F 570
205/60 R 15 95H	Continental	CH 90
Only 16" tyres are permitted for vehicles from model year 2002		
195/60 R 16 C 99/97H	Dunlop	SP Sport 200
	Bridgestone	ER 30C
	Michelin	Agilisis 51
205/55 R 16 C 98/96H	Bridgestone	ER 30C
215/55 R 16 95H reinforced	Dunlop	SP Sport 2020 E
	Michelin	Pilot HXMXM
	Continental	CEC CP
	Firestone	FH 700
215/55 R 16 95W reinforced	Dunlop	SP Sport 2020 E
	Michelin	Pilot HXMXM
	Continental	CEC CP
	Firestone	FH 700
215/55 R 16 97H reinforced	Michelin	Pilot HXMXM
	Firestone	FH 700
215/55 R 16 97W reinforced	Michelin	Pilot HXMXM
	Firestone	FH 700
225/45 R 17 94W reinforced	Michelin	Pilot Primacy
	Dunlop	SP Sport 01A

63.50 Summer tyres for Sharan BlueMotion from model year 2009

Observe the notes regarding the recommended makes of summer tyres ⇒ page 636

Tyre size	Make	Tread pattern
195/60 R 16 C 99/97H	Bridgestone	ER 30C

Protected by copyright. Copying for private or commercial purposes, in part or in whole, is not permitted unless authorised by Volkswagen AG. Volkswagen AG does not guarantee or accept any liability with respect to the correctness of information in this document. Copyright by Volkswagen AG.
satelettronica

63.51 Summer tyres for Touareg model year 2008 to model year 2010

Observe the notes regarding the recommended makes of summer tyres ⇒ page 636

Tyre size	Make	Tread pattern
235/65 R 17 108V	Bridgestone	Dueler HP
	Michelin	4x4 Diamaris
255/60 R 17 106V	Michelin	4x4 Diamaris
	Pirelli	Pzero Rosso
	Goodyear	Wrangler F1 WRL2
255/55 R 18 109Y XL	Bridgestone	Dueler HP Sport
	Michelin	Latitude Sport
275/45 ZR 19 108Y XL	Pirelli	Pzero Rosso
275/45 R 19 108Y XL	Michelin	Latitude Sport
	Bridgestone	Dueler HP Sport
	Yokohama	Advan Sport NO
275/40 R 20 106Y XL	Pirelli	Pzero Rosso
	Michelin	4x4 Diamaris
	Bridgestone	Dueler HP Sport
	Yokohama	Advan Sport NO

XL means “Extra Load” Notes ⇒ page 17

63.52 Summer tyres for Touareg R50 model year 2008 to model year 2010

Observe the notes regarding the recommended makes of summer tyres ⇒ page 636

Tyre size	Make	Tread pattern
275/40 R 20 106Y XL	Pirelli	Pzero Rosso
	Michelin	4x4 Diamaris
	Bridgestone	Dueler HP Sport
	Yokohama	Advan Sport NO
295/35 R 21 107Y XL	Michelin	NO Latitude Sport
	Dunlop	SP Sport Maxx
	Yokohama	Advan Sport NO

XL means “Extra Load” Notes ⇒ page 17

Protected by copyright. Copying for private or commercial purposes, in part or in whole, is not permitted unless authorised by Volkswagen AG. Volkswagen AG does not guarantee or accept any liability with respect to the correctness of information in this document. Copyright by Volkswagen AG.
satelettronica

64 Recommended all-season tyres

Notes regarding the recommended makes of all-season tyre

- Tyres are one of the most important elements in motor vehicle construction and have a major influence on road safety. Therefore, they must fulfil numerous conditions which are specified for tyre manufacturers in the DIN (German industrial standards) and the directives of the German rubber industry e. V. (W.d.K.). In addition, comprehensive testing is carried out at Volkswagen before tyres are approved for initial fitting on our vehicles.
- The following lists all tyre makes and tread patterns that are fitted to VW vehicles ex-factory, correct at the time of publication.
- These tyre makes/tread patterns meet the aforementioned demands. We therefore recommend the tyres/tread types listed in this guide are chosen as replacements.
- Observe special requirements for tyres with run-flat properties ⇒ page 55

64.1 All-season tyres Lupo model year 1999 to model year 2005

Observe the notes regarding the recommended makes of all-season tyres ⇒ page 667

Tyre size	Make	Tread pattern
155/70 R 13 75T	Dunlop	SP All Season M2
175/65 R 13 80T	Dunlop	SP All Season M2

64.2 All-season tyres Polo model year 1995 to model year 2001

Observe the notes regarding the recommended makes of all-season tyres ⇒ page 667

Tyre size	Make	Tread pattern
155/70 R 13 75T	Dunlop	SP All Season M2 (for Europe)
175/65 R 13 80T	Dunlop	SP All Season M2 (for Europe)
	Continental	TS 755

64.3 All-season tyres for Polo from model year 2002

Observe the notes regarding the recommended makes of all-season tyres ⇒ page 667

Tyre size	Make	Tread pattern
165/70 R 14 81T	Goodyear	Vector 5
185/60 R 14 82H	Dunlop	SP All Season M2
	Goodyear	Eagle Vector EV2

satelettronica

64.4 All-season tyres Polo saloon/sedan model year 2004 to model year 2005

Observe the notes regarding the recommended makes of all-season tyres ⇒ page 667

Tyre size	Make	Tread pattern
165/70 R 14 81T	Goodyear	Vector 3
185/60 R 14 82H	Dunlop	SP All Season M2
	Goodyear	Eagle Vector

64.5 All-season tyres Golf, Vento model year 1992 to model year 1998

Observe the notes regarding the recommended makes of all-season tyres ⇒ page 667

Tyre size	Make	Tread pattern	Remarks
175/70 R 13 82T	Dunlop	SP All Season M2	
185/60 R 14 82H	Dunlop	SP All Season M2	For Europe
195/60 R 14 86H	Dunlop	All Season M2	
	Goodyear	Eagle GA	For USA
	Goodrich	Comp T/A	
205/50 R 15 86H	Goodyear	Eagle GA	For USA

64.6 All-season tyres Golf Variant model year 1994 to model year 1998

Observe the notes regarding the recommended makes of all-season tyres ⇒ page 667

Tyre size	Make	Tread pattern	Remarks
175/70 R 13 82T	Dunlop	SP All Season M2	
185/60 R 14 82H	Dunlop	SP All Season M2	For Europe
195/60 R 14 86H	Dunlop	All Season M2	
	Goodyear	Eagle GA	For USA
	Goodrich	Comp T/A	
205/50 R 15 86H	Goodyear	Eagle GA	For USA

64.7 All-season tyres Golf cabriolet model year 1994 to model year 1997

Observe the notes regarding the recommended makes of all-season tyres ⇒ page 667

Tyre size	Make	Tread pattern	Remarks
185/60 R 14 82H	Dunlop	SP All Season M2	For Europe

64.8 All-season tyres Golf, Golf 4Motion model year 1998 to model year 2004

Observe the notes regarding approved makes of all-season tyres for initial fitting ⇒ page 667

Tyre size	Make	Tread pattern	Remarks
175/80 R 14 88H	Dunlop	SP All Season M2	
195/65 R 15 91H	Dunlop	SP All Season M2	For Europe

satelettronica

Tyre size	Make	Tread pattern	Remarks
	Continental	CH 95	For USA
	Michelin	MXV4 Plus	
	Goodyear	Eagle LS	
205/55 R 16 91H	Continental	CH 95	
	Goodyear	Eagle RSA	
	Michelin	MXV4 Plus	For Japan
225/45 R 17 91H	Michelin	MXM	For USA
	Goodyear	Eagle RSA	
225/45 R 17 94H XL	Michelin	MXM	For USA

64.9 All-season tyres for Golf model year 2004 to model year 2009

Observe the notes regarding the recommended makes of all-season tyres ⇒ page 667

Tyre size	Make	Tread pattern	Remarks
195/65 R 15 91H	Dunlop	AS M2	
	Goodyear	Vector EV2	
	Michelin	MXV 4 S8	For USA
	Goodyear	Eagle LS	
	Continental	Pro Contact	
205/55 R 16 91H	Michelin	MXV 4 S8	For USA
	Goodyear	Eagle LS	
	Continental	Pro Contact	
	Bridgestone	EL 400	
	Hankook	Optima H725H	
205/55 R 16 94V	Goodyear	Vector 2	
225/45 R 17 91H	Michelin	MXM 4	For USA
	Continental	Pro Contact	
	Goodyear	Eagle RSA	

64.10 All-season tyres for CrossGolf from model year 2007

Observe the notes regarding the recommended makes of all-season tyres ⇒ page 667

Tyre size	Make	Tread pattern	Remarks
195/65 R 15 91H	Dunlop	AS M2	
	Goodyear	Vector EV2	
	Michelin	MXV 4 S8	For USA
	Goodyear	Eagle LS	
	Continental	Pro Contact	
205/55 R 16 91H	Michelin	MXV 4 S8	For USA
	Goodyear	Eagle LS	
	Continental	Pro Contact	
	Bridgestone	EL 400	
	Hankook	Optima H725H	
205/55 R 16 94V	Goodyear	Vector 2	

Protected by copyright. Copying for private or commercial purposes, in part or in whole, is not permitted unless authorised by Volkswagen AG. Volkswagen AG does not guarantee or accept any liability with respect to the correctness of information in this document. Copyright by Volkswagen AG.
satelettronica

Tyre size	Make	Tread pattern	Remarks
225/45 R 17 91H	Michelin	MXM 4	For USA
	Continental	Pro Contact	
	Goodyear	Eagle RSA	

64.11 All-season tyres for Golf Plus from model year 2005

Observe the notes regarding the recommended makes of all-season tyres ⇒ page 667

Tyre size	Make	Tread pattern	Remarks
195/65 R 15 91H	Dunlop	AS M2	
	Goodyear	Vector EV2	
	Michelin	MXV 4 S8	For USA
	Goodyear	Eagle LS	
	Continental	Pro Contact	
205/55 R 16 91H	Michelin	MXV 4 S8	For USA
	Goodyear	Eagle LS	
	Continental	Pro Contact	
	Bridgestone	EL 400	
	Hankook	Optima H725H	
205/55 R 16 94V	Goodyear	Vector 2	
225/45 R 17 91H	Michelin	MXM 4	For USA
	Continental	Pro Contact	
	Goodyear	Eagle RSA	

64.12 All-season tyres Bora, Bora 4Motion model year 1999 to model year 2005

Observe the notes regarding the recommended makes of all-season tyres ⇒ page 667

Tyre size	Make	Tread pattern	Remarks
195/65 R 15 91H	Dunlop	SP All Season M2	For Europe
	Continental	CH 95	For USA
	Michelin	MXV4 Plus	
	Goodyear	Eagle LS	
205/55 R 16 91H	Continental	CH 95	
	Goodyear	Eagle RSA	
	Michelin	MXV4 Plus	For Japan
225/45 R 17 91H	Michelin	MXM	For USA
	Goodyear	Eagle RSA	
225/45 R 17 94H XL	Michelin	MXM	For USA

Protected by copyright. Copying for private or commercial purposes, in part or in whole, is not permitted unless authorised by Volkswagen AG. Volkswagen AG does not guarantee or accept any liability with respect to the correctness of information in this document. Copyright by Volkswagen AG.
satelettronica

64.13 All-season tyres Golf Variant, Golf Variant 4Motion model year 1999 to model year 2006, Bora Variant, Bora Variant 4Motion model year 1999 to model year 2005

Observe the notes regarding the recommended makes of all-season tyres ⇒ page 667

Tyre size	Make	Tread pattern	Remarks
195/65 R 15 91H	Dunlop	SP All Season M2	For Europe
	Continental	CH 95	For USA
	Michelin	MXV4 Plus	
	Goodyear	Eagle LS	
205/55 R 16 91H	Continental	CH 95	
	Goodyear	Eagle RSA	
	Michelin	MXV4 Plus	For Japan
225/45 R 17 91H	Michelin	MXM	For USA
	Goodyear	Eagle RSA	
225/45 R 17 94H XL	Michelin	MXM	For USA

64.14 All-season tyres Golf Variant model year 2007 to model year 2010

Observe the notes regarding the recommended makes of all-season tyres ⇒ page 667

Tyre size	Make	Tread pattern	Remarks
195/65 R 15 91H	Dunlop	AS M2	
	Goodyear	Vector EV2	
	Michelin	MXV 4 S8	For USA
	Goodyear	Eagle LS	
	Continental	Pro Contact	
205/55 R 16 91H	Michelin	MXV 4 S8	For USA
	Goodyear	Eagle LS	
	Continental	Pro Contact	
	Bridgestone	EL 400	
	Hankook	Optima H725H	
205/55 R 16 94V	Goodyear	Vector 2	
225/45 R 17 91H	Michelin	MXM 4	For USA
	Continental	Pro Contact	
	Goodyear	Eagle RSA	

64.15 All-season tyres Jetta Model Year 2006 to Model Year 2011

Observe the notes regarding the recommended makes of all-season tyres ⇒ page 667

Tyre size	Make	Tread pattern	Remarks
195/65 R 15 91H	Dunlop	AS M2	
	Goodyear	Vector EV2	
	Continental	Pro Contact	For USA
205/55 R 16 91H	Michelin	MXV 4 S8	For USA

Protected by copyright. Copyright by Volkswagen AG. Volkswagen AG does not guarantee or accept any liability with respect to the correctness of information in this document. Copyright by Volkswagen AG. Reproduction, in whole or in part, for private or commercial purposes is not permitted unless authorized by Volkswagen AG.
satelettronica

Tyre size	Make	Tread pattern	Remarks
	Goodyear	Eagle LS	
	Continental	Pro Contact	
	Bridgestone	EL 400	
	Hankook	Optima H725H	
205/55 R 16 94V	Goodyear	Vector 2	
205/50 R 17 93V	Continental	TS815C3	Self-sealing tyres “ContiSeal” ⇒ Workshop manual: Running gear, axles, steering; Rep. gr. 44 ; Self-sealing tyres “Conti-Seal”
225/45 R 17 91H	Michelin	MXM 4	For USA
	Continental	Pro Contact	
	Goodyear	Eagle RSA	
225/40 R 18 92H	Bridgestone	RE 050	For USA

64.16 All-season tyres Golf cabriolet model year 1998 to model year 2002

Observe the notes regarding the recommended makes of all-season tyres ⇒ page 667

Tyre size	Make	Tread pattern	Remarks
175/80 R 14 88H	Dunlop	SP All Season M2	
195/65 R 15 91H	Dunlop	SP All Season M2	
205/55 R 16 91H	Continental	CH 95	
	Goodyear	Eagle RSA	
	Michelin	MXV4 Plus	For Japan
225/45 R 17 91H	Michelin	MXM	For USA

64.17 All-season tyres for New Beetle from model year 1999

Observe the notes regarding the recommended makes of all-season tyres ⇒ page 667

Tyre size	Make	Tread pattern	Remarks
195/65 R 15 91H	Dunlop	SP All Season M2	For Europe
	Goodyear	Vector EV2	
	Continental	CH 95	For USA
	Michelin	MXV4 Plus	
	Goodyear	Eagle LS	
205/55 R 16 91H	Michelin	MXV4 S8	For Japan
	Continental	Pro Contact	For USA
	Goodyear	Eagle LS	
	Michelin	MXV4 S8	
	Bridgestone	EL 400	
225/45 R 17 91H	Michelin	MXM 4	For USA
	Goodyear	Eagle RSA	
225/45 R 17 91H	Michelin	MXM 4	For Japan

Copyright by Volkswagen AG. Volkswagen AG does not guarantee or accept any liability with respect to the correctness of information in this document. Copyright by Volkswagen AG. Copying for private or commercial purposes, in part or in whole, is not permitted unless authorised by Volkswagen AG.
satelettronica

64.18 All-season tyres for New Beetle Cabriolet from model year 2003

Observe the notes regarding the recommended makes of all-season tyres ⇒ page 667

Tyre size	Make	Tread pattern	Remarks
195/65 R 15 91H	Dunlop	SP All Season M2	For Europe
	Goodyear	Vector EV2	
	Continental	CH 95	For USA
	Michelin	MXV4 Plus	
	Goodyear	Eagle LS	
205/55 R 16 91H	Michelin	MXV4 S8	For Japan
	Continental	Pro Contact	For USA
	Goodyear	Eagle LS	
	Michelin	MXV4 S8	
	Bridgestone	EL 400	
225/45 R 17 91H	Michelin	MXM 4	For USA
	Goodyear	Eagle RSA	
225/45 R 17 91H	Michelin	MXM 4	For Japan

64.19 All-season tyres Passat model year 1997 to model year 2005

Observe the notes regarding the recommended makes of all-season tyres ⇒ page 667

Tyre size	Make	Tread pattern	Remarks
195/65 R 15 91H	Dunlop	SP All Season M2	For Europe
	Continental	CH 95	For USA
	Michelin	MXV4 Plus	
	Goodyear	Eagle LS	
205/55 R 16 91H	Continental	CH 95	
	Goodyear	Eagle RSA	
	Michelin	MXV4 Plus	For Japan
225/45 R 17 94H XL	Michelin	MXM	For USA

64.20 All-season tyres for Passat W8

Observe the notes regarding the recommended makes of all-season tyres ⇒ page 667

Tyre size	Make	Tread pattern	Remarks
215/55 R 16 93H	Continental	CH 95	For USA
215/55 R 16 97H XL	Continental	CH 95	For USA
	Michelin	MXM 4	

XL means “Extra Load” ⇒ page 17

Protected by copyright. Copyright by Volkswagen AG.
Volkswagen AG, Volkswagen AG does not guarantee or accept any liability with respect to the correctness of information in this document. Copyright by Volkswagen AG. Protected by copyright. Copying for private or commercial purposes, in part or in whole, is not permitted unless authorised by Volkswagen AG.
satelettronica

64.21 All-season tyres for Passat saloon from model year 2006

Observe the notes regarding the recommended makes of all-season tyres ⇒ page 667

Tyre size	Make	Tread pattern	Remarks
205/55 R 16 94V	Goodyear	Vector 2	
215/55 R 16 97H	Goodyear	Eagle LS	For USA
	Continental	Pro Contact	
	Michelin	MXM 4	
215/55 R 16 97V	Bridgestone	ER 300 RFT	Tyres with run-flat properties ⇒ page 55
235/45 R 17 97H	Michelin	MXM 4	For USA
	Continental	Pro Contact	
	Goodyear	Eagle LS2	
235/40 R 18 95H	Pirelli	P 6 4Season	For USA

64.22 All-season tyres for Passat saloon BlueMotion from model year 2008

Observe the notes regarding the recommended makes of all-season tyres ⇒ page 667

Tyre size	Make	Tread pattern	Remarks
205/55 R 16 94V	Goodyear	Vector 2	

64.23 All-season tyres for Passat Variant from model year 2006

Observe the notes regarding the recommended makes of all-season tyres ⇒ page 667

Tyre size	Make	Tread pattern	Remarks
205/55 R 16 94V	Goodyear	Vector 2	
215/55 R 16 97H	Goodyear	Eagle LS	For USA
	Continental	Pro Contact	
	Michelin	MXM 4	
215/55 R 16 97V	Bridgestone	ER 300 RFT	Tyres with run-flat properties ⇒ page 55
235/45 R 17 97H	Michelin	MXM 4	For USA
	Continental	Pro Contact	
	Goodyear	Eagle LS2	
235/40 R 18 95H	Pirelli	P 6 4Season	For USA

64.24 All-season tyres for Passat Variant BlueMotion from model year 2008

Observe the notes regarding the recommended makes of all-season tyres ⇒ page 667

Tyre size	Make	Tread pattern	Remarks
205/55 R 16 94V	Goodyear	Vector 2	

Protected by copyright. Copying for private or commercial purposes, in part or in whole, is not permitted unless authorised by Volkswagen AG. Volkswagen AG does not guarantee or accept any liability with respect to the correctness of information in this document. Copyright by Volkswagen AG.
satelettronica

64.25 All-season tyres for Passat R36 from model year 2008

Observe the notes regarding the recommended makes of all-season tyres ⇒ page 667

Tyre size	Make	Tread pattern	Remarks
235/45 R 17 97H	Michelin	MXM 4	For USA
	Continental	Pro Contact	
	Goodyear	Eagle LS2	
235/40 R 18 95H	Pirelli	P 6 4Season	

64.26 All-season tyres for Touareg model year 2003 to model year 2010

Observe the notes regarding the recommended makes of all-season tyres ⇒ page 667

Tyre size	Make	Tread pattern	Remarks
235/70 R 16 105H	Goodyear	Wrangler HP	
235/65 R 17 108H	Continental	4x4 Contact	
255/60 R 17 106H	Pirelli	Scorpion A/T	
	Dunlop	SP Sport 5000	For USA
	Goodyear	Eagle LS2	
	Pirelli	Scorpion STR	
255/55 R 18 109H XL	Michelin	Latitude Tour HP	For USA
	Goodyear	Eagle LS2	
	Pirelli	Scorpion STR	
255/55 R 18 109V XL	Pirelli	Scorpion STR	
275/45 R19 108V XL	Michelin	Latitude Tour HP	
	Goodyear	Eagle LS2	

XL means “Extra Load” Notes ⇒ page 17

Protected by copyright. Copying for private or commercial purposes, in part or in whole, is not permitted unless authorised by Volkswagen AG. Volkswagen AG does not guarantee or accept any liability with respect to the correctness of information in this document. Copyright by Volkswagen AG.
satelettronica

65 Recommended winter tyres

Notes regarding the recommended makes of winter tyre

- Tyres are one of the most important elements in motor vehicle construction and have a major influence on road safety. Therefore, they must fulfil numerous conditions which are specified for tyre manufacturers in the DIN (German industrial standards) and the directives of the German rubber industry e. V. (W.d.K.). In addition, comprehensive testing is carried out at Volkswagen before tyres are approved for initial fitting on our vehicles.
- The following lists all tyre makes and tread patterns that are fitted to VW vehicles ex-factory, correct at the time of publication.
- These tyre makes/tread patterns meet the aforementioned demands. We therefore recommend the tyres/tread types listed in this guide are chosen as replacements.
- Observe special requirements for tyres with run-flat properties ⇒ page 55 .

65.1 Winter tyres Lupo 3L model year 1999 to model year 2005

Observe the notes regarding the recommended makes of winter tyres ⇒ page 676

Tyre size	Make	Tread pattern
155/65 R 14 75T	Continental	TS 760 Winter Contact
	Dunlop	SP Winter Sport M2
	Michelin	Alpin

65.2 Winter tyres Lupo FSI model year 1999 to model year 2005

Observe the notes regarding the recommended makes of winter tyres ⇒ page 676

Tyre size	Make	Tread pattern
155/65 R 14 75T	Continental	TS 760 Winter Contact
	Dunlop	SP Winter Sport M2
	Michelin	Alpin

65.3 Winter tyres Lupo GTI model year 1999 to model year 2005

Observe the notes regarding the recommended makes of winter tyres ⇒ page 676

Tyre size	Make	Tread pattern
185/55 R 14 78T	Continental	TS 760
	Dunlop	SP Winter Sport M2
	Michelin	Alpin

Protected by copyright. Copying for private or commercial purposes, in part or in whole, is not permitted unless authorised by Volkswagen AG. Volkswagen AG does not guarantee or accept any liability with respect to the correctness of information in this document. Copyright by Volkswagen AG.
satelettronica

65.4 Winter tyres Lupo model year 1999 to model year 2005

Observe the notes regarding the recommended makes of winter tyres ⇒ page 676

Tyre size	Make	Tread pattern
155/70 R 13 75Q	Goodyear	Ultra Grip 5
	Michelin	Alpin
155/70 R 13 75S	Vredestein	Snowtrac
155/70 R 13 75T	Continental	TS 780
	Kleber	Krisalp 3
175/65 R 13 80Q	Goodyear	Ultra Grip 5
175/65 R 13 80T	Dunlop	SP Winter Sport M2
	Vredestein	Snowtrac
185/55 R 14 78T	Continental	TS 760
	Dunlop	Winter Sport M2
	Michelin	Alpin

65.5 Winter tyres for Fox from model year 2005

Observe the notes regarding the recommended makes of winter tyres ⇒ page 676

Tyre size	Make	Tread pattern
165/70 R 14 81T	Continental	TS 780 Winter Contact
	Dunlop	SP Winter Sport M2
	Michelin	XM + S Alpin
	Goodyear	Ultra Grip 5
185/60 R 14 82Q/T	Pirelli	W190 SnowControl
	Goodyear	Ultra Grip 7+

65.6 Winter tyres Polo model year 1995 to model year 2001

Observe the notes regarding the recommended makes of winter tyres ⇒ page 676

Tyre size	Make	Tread pattern
155/70 R 13 75Q	Goodyear	Ultra Grip 5
	Michelin	Alpin
155/70 R 13 75S	Vredestein	Snowtrac
155/70 R 13 75T	Continental	TS 780
	Kleber	Krisalp 3
175/65 R 13 80Q	Goodyear	Ultra Grip 5
175/65 R 13 80T	Dunlop	SP Winter Sport M2
	Vredestein	Snowtrac
185/55 R 14 78T	Continental	TS 760
	Dunlop	Winter Sport M2
	Michelin	Alpin

Protected by copyright. Copying for private or commercial purposes, in part or in whole, is not permitted unless authorised by Volkswagen AG. Volkswagen AG does not guarantee or accept any liability with respect to the correctness of information in this document. Copyright by Volkswagen AG.
satelettronica

65.7 Winter tyres for Polo from model year 2002

Observe the notes regarding the recommended makes of winter tyres ⇒ page 676

Tyre size	Make	Tread pattern
155/80 R 13 79Q	Continental	TS 760 Winter Contact
	Dunlop	SP Winter Sport M2
165/70 R 14 81T	Continental	TS 780 Winter Contact
	Dunlop	SP Winter Sport M3
	Michelin	Alpin
	Pirelli	V190 Snowcontrol
	Goodyear	Ultra Grip 7
185/60 R 14 82T	Goodyear	Ultra Grip 7
	Continental	TS 780 Winter Contact
	Vredestein	Snowtrac 2
	Dunlop	Winter Sport M3
	Pirelli	V190 Snowcontrol
	Michelin	Alpin 2
185/55 R 15 82T	Dunlop	SP Winter Sport M2
185/55 R 15 84T	Dunlop	SP Winter Sport M3
	Continental	TS 800
	Vredestein	Snowtrac 2

65.8 Winter tyres for Polo Fun model year 2004 to model year 2006

Observe the notes regarding the recommended makes of winter tyres ⇒ page 676

Tyre size	Make	Tread pattern
185/60 R 15 84T	Dunlop	SP Winter Sport M3
	Continental	TS 800
	Vredestein	Snowtrac 2

65.9 Winter tyres for CrossPolo from model year 2006

Observe the notes regarding the recommended makes of winter tyres ⇒ page 676

Tyre size	Make	Tread pattern
185/60 R 15 84T	Dunlop	SP Winter Sport M3
	Continental	TS 800
	Vredestein	Snowtrac 2

65.10 Winter tyres for Polo BlueMotion from model year 2007

Observe the notes regarding the recommended makes of winter tyres ⇒ page 676

Tyre size	Make	Tread pattern
165/70 R 14 81T	Continental	TS 780 Winter Contact

Copyright by Volkswagen AG. Protected by copyright. Copying for private or commercial purposes, in whole or in part, is not permitted unless authorised by Volkswagen AG. Volkswagen AG does not guarantee or accept any liability with respect to the correctness of information in this document.
satelettronica

Tyre size	Make	Tread pattern
	Dunlop	SP Winter Sport M3
	Michelin	Alpin
	Pirelli	V190 Snowcontrol
	Goodyear	Ultra Grip 7

65.11 Winter tyres for Polo GTI from model year 2007

Observe the notes regarding the recommended makes of winter tyres ⇒ page 676

Tyre size	Make	Tread pattern
185/55 R 15 82T	Dunlop	SP Winter Sport M2
185/55 R 15 84T	Dunlop	SP Winter Sport M3
	Continental	TS 800
	Vredestein	Snowtrac 2

65.12 Winter tyres for Polo GTI Cup Edition from model year 2007

Information on the recommended winter tyres was not available at time of going to print. Please contact the customer service department of VW R GmbH at the following address - kundenbetreuung@volkswagen-r.de.

65.13 Winter tyres Polo saloon/sedan model year 2004 to model year 2005

Observe the notes regarding the recommended makes of winter tyres ⇒ page 676

Tyre size	Make	Tread pattern
155/80 R 13 79Q	Continental	TS 760 Winter Contact
	Goodyear	Ultra Grip 5
	Michelin	XM + S Alpin
165/70 R 14 81T	Continental	TS 780 Winter Contact
	Dunlop	SP Winter Sport M2
	Michelin	XM + S Alpin
	Goodyear	Ultra Grip 5
185/60 R 14 82Q/T	Goodyear	Ultra Grip 6
185/55 R 15 82T	Dunlop	SP Winter Sport M2
	Michelin	XM + S Alpin
185/55 R 15 85/86T	Nokian	NRW
	Pirelli	Winter 190

65.14 Winter tyres Polo Classic model year 1996 to model year 2002

Observe the notes regarding the recommended makes of winter tyres ⇒ page 676

Tyre size	Make	Tread pattern
175/65 R 14 82Q/T	Dunlop	SP Winter Sport M2
	Goodyear	Ultra Grip 5

Copyright by Volkswagen AG. Volkswagen AG does not guarantee or accept any liability with respect to the correctness of information in this document. Copying for private or commercial purposes, in part or in whole, is not permitted unless authorised by Volkswagen AG.

satelettronica

Tyre size	Make	Tread pattern
185/60 R 14 82Q	Michelin	XM + S Alpin
185/60 R 14 82T	Continental	TS 780 Winter Contact
	Goodyear	Ultra Grip 5
	Michelin	Alpin
	Vredestein	Snowtrac
185/60 R 14 82H	Continental	TS 770 Winter Contact

65.15 Winter tyres Polo Variant model year 1998 to model year 2002

Observe the notes regarding the recommended makes of winter tyres ⇒ page 676

Tyre size	Make	Tread pattern
175/65 R 14 82Q/T	Dunlop	SP Winter Sport M2
	Goodyear	Ultra Grip 5
185/60 R 14 82Q	Michelin	XM + S Alpin
185/60 R 14 82T	Continental	TS 780 Winter Contact
	Goodyear	Ultra Grip 5
	Michelin	Alpin
	Vredestein	Snowtrac
185/60 R 14 82H	Continental	TS 770 Winter Contact

65.16 Winter tyres Golf, Vento model year 1992 to model year 1998

Observe the notes regarding the recommended makes of winter tyres ⇒ page 676

Tyre size	Make	Tread pattern
175/70 R13 82T	Uniroyal	MS + 4
	Goodyear	Ultra Grip 5
	Michelin	XM + S 130
185/60 R 14 82Q	Michelin	XM + S Alpin
185/60 R 14 82T	Continental	TS 780 Winter Contact
	Goodyear	Ultra Grip 5
	Michelin	Alpin
	Vredestein	Snowtrac
185/60 R 14 82H	Continental	TS 770 Winter Contact
185/55 R 15 85T	Continental	TS 770 Winter Contact
	Michelin	XM + S 130
185/55 R 15 82H	Continental	TS 770 Winter Contact
185/60 R 14 86T	Continental	TS 770 Winter Contact
	Michelin	XM + S 130

Volkswagen AG. Volkswagen AG does not guarantee or accept any liability with respect to the correctness of information in this document. Copyright by Volkswagen AG.
This document is not to be reproduced, modified or published without prior written consent. Copying for private or commercial purposes, in part or in whole, is not permitted unless authorised by Volkswagen AG.
satelettronica

65.17 Winter tyres Golf Variant model year 1994 to model year 1998

Observe the notes regarding the recommended makes of winter tyres ⇒ page 676

Tyre size	Make	Tread pattern
175/70 R13 82T	Uniroyal	MS + 4
	Goodyear	Ultra Grip 5
	Michelin	XM + S 130
185/60 R 14 82Q	Michelin	XM + S Alpin
185/60 R 14 82T	Continental	TS 780 Winter Contact
	Goodyear	Ultra Grip 5
	Michelin	Alpin
	Vredestein	Snowtrac
185/60 R 14 82H	Continental	TS 770 Winter Contact
185/55 R 15 85T	Continental	TS 770 Winter Contact
	Michelin	XM + S 130
185/55 R 15 82H	Continental	TS 770 Winter Contact
185/60 R 14 86T	Continental	TS 770 Winter Contact
	Michelin	XM + S 130

65.18 Winter tyres Golf cabriolet model year 1994 to model year 1997

Observe the notes regarding the recommended makes of winter tyres ⇒ page 676

Tyre size	Make	Tread pattern
175/70 R13 82T	Uniroyal	MS + 4
	Goodyear	Ultra Grip 5
	Michelin	XM + S 130
185/60 R 14 82Q	Michelin	XM + S Alpin
185/60 R 14 82T	Continental	TS 780 Winter Contact
	Goodyear	Ultra Grip 5
	Michelin	Alpin
	Vredestein	Snowtrac
185/60 R 14 82H	Continental	TS 770 Winter Contact
185/60 R 14 86T	Continental	TS 770 Winter Contact
	Michelin	XM + S 130

65.19 Winter tyres Golf, Golf 4Motion model year 1998 to model year 2004

Observe the notes regarding the recommended makes of winter tyres ⇒ page 676

Tyre size	Make	Tread pattern
175/80 R 14 88Q	Continental	TS 780 Winter Contact
	Goodyear	Ultra Grip 5
	Michelin	Alpin
175/80 R 14 88T	Dunlop	SP Winter Sport M2
	Vredestein	Snowtrac

Protected by copyright. Copying for private or commercial purposes, in part or in whole, is not permitted unless authorised by Volkswagen AG. Volkswagen AG does not guarantee or accept any liability with respect to the correctness of information in this document. Copyright by Volkswagen AG.
satelettronica

Tyre size	Make	Tread pattern
195/65 R 15 91T	Continental	TS 790 Winter Contact
	Dunlop	SP Winter Sport M3
	Goodyear	Ultra Grip 6
	Michelin	Alpin
	Pirelli	Winter 190
195/65 R 15 91H	Continental	TS 790 Winter Contact
	Michelin	Pilot Alpin
	Nokian	NRW
	Vredestein	Wintrac
	Goodyear	Eagle UG GW3
205/55 R 16 91H	Continental	TS 790 Winter Contact
	Dunlop	SP Winter Sport M3
	Michelin	Pilot Alpin
	Pirelli	Winter 210
	Vredestein	Wintrac

65.20 Winter tyres for Golf model year 2004 to model year 2009

Observe the notes regarding the recommended makes of winter tyres ⇒ page 676

Tyre size	Make	Tread pattern	Remarks
195/65 R 15 91Q	Michelin	X-Ice	♦ For Japan only ♦ For 1.6 E and 2.0l FSI engines only
195/65 R 15 91T	Bridgestone	LM25	
	Dunlop	Winter Sport 3D	
195/65 R 15 91H	Continental	TS 810	
	Dunlop	Winter Sport 3D	
	Goodyear	Eagle UG GW 3	
	Bridgestone	LM25	
	Pirelli	Winter 210	
	Nokian	WR	
195/65 R 15 95T	Goodyear	UG 6	
	Continental	TS 790	
205/55 R 16 91Q	Michelin	X-Ice	♦ For Japan only ♦ For 1.6 E, 2.0l and 2.0l turbo engines only
205/55 R 16 91H	Goodyear	Eagle UG GW3	
	Michelin	Pilot Alpin	
	Nokian	WR	
	Pirelli	Winter 210	
	Bridgestone	LM25	
205/55 R 16 94H	Dunlop	SP Winter Sport M3 DSST	Tyres with run-flat properties ⇒ page 55
	Bridgestone	LM25	
205/55 R 17 93H	Dunlop	Winter Sport 3D	

Protected by copyright. Copying for private or commercial purposes, in part or in whole, is not permitted unless authorised by Volkswagen AG. Volkswagen AG does not guarantee or accept any liability with respect to the correctness of information in this document. Copyright by Volkswagen AG.

satelettronica

Tyre size	Make	Tread pattern	Remarks
225/45 R 17 91Q	Michelin	X-Ice	♦ For Japan only ♦ For 2.0l turbo engines only

65.21 Winter tyres for Golf BlueMotion model year 2004 to model year 2009

Observe the notes regarding the recommended makes of winter tyres ⇒ page 676

Tyre size	Make	Tread pattern	Remarks
195/65 R 15 91T	Bridgestone	LM25	
	Dunlop	Winter Sport 3D	
195/65 R 15 91H	Continental	TS 810	
	Dunlop	Winter Sport 3D	
	Goodyear	Eagle UG GW 3	
	Bridgestone	LM25	
	Pirelli	Winter 210	
	Nokian	WR	
195/65 R 15 95T	Goodyear	UG 6	
	Continental	TS 790	

65.22 Winter tyres for Golf GTI model year 2005 to model year 2009

Observe the notes regarding the recommended makes of winter tyres ⇒ page 676

Tyre size	Make	Tread pattern	Remarks
205/55 R 16 91H	Goodyear	Eagle UG GW3	
	Michelin	Pilot Alpin	
	Nokian	WR	
	Pirelli	Winter 210	
	Bridgestone	LM25	
205/55 R 16 94H	Dunlop	SP Winter Sport M3 DSST	Tyres with run-flat properties ⇒ page 55
	Bridgestone	LM25	
205/55 R 17 93H	Dunlop	Winter Sport 3D	

65.23 Winter tyres for Pirelli Golf model year 2008 to model year 2009

Observe the notes regarding the recommended makes of winter tyres ⇒ page 676

Tyre size	Make	Tread pattern	Remarks
205/55 R 16 91H	Goodyear	Eagle UG GW3	
	Michelin	Pilot Alpin	
	Nokian	WR	
	Pirelli	Winter 210	
	Bridgestone	LM25	
205/55 R 16 94H	Dunlop	SP Winter Sport M3 DSST	Tyres with run-flat properties ⇒ page 55

Protected by copyright. Copying for private or commercial purposes, in part or in whole, is not permitted unless authorised by Volkswagen AG. Volkswagen AG does not guarantee or accept any liability with respect to the correctness of information in this document. Copyright by Volkswagen AG.

satelettronica

Tyre size	Make	Tread pattern	Remarks
	Bridgestone	LM25	
205/55 R 17 93H	Dunlop	Winter Sport 3D	

65.24 Winter tyres for Golf R32 model year 2006 to model year 2009

Observe the notes regarding the recommended makes of winter tyres ⇒ page 676

Tyre size	Make	Tread pattern
205/50 R 17 93H	Dunlop	Winter Sport 3D

65.25 Winter tyres for CrossGolf from model year 2007

Observe the notes regarding the recommended makes of winter tyres ⇒ page 676

Tyre size	Make	Tread pattern	Remarks
195/65 R 15 91Q	Michelin	X-Ice	• Only for Japan: 1.6l FSI and 2.0l FSI engines
195/65 R 15 91T	Bridgestone	LM25	
	Dunlop	Winter Sport 3D	
195/65 R 15 91H	Continental	TS 810	
	Dunlop	Winter Sport 3D	
	Goodyear	Eagle UG GW 3	
	Bridgestone	LM25	
	Pirelli	Winter 210	
	Nokian	WR	
195/65 R 15 95T	Goodyear	UG 6	
	Continental	TS 790	
205/55 R 16 91H	Goodyear	Eagle UG GW3	
	Michelin	Pilot Alpin	
	Nokian	WR	
	Pirelli	Winter 210	
	Bridgestone	LM25	
205/55 R 16 94H	Dunlop	SP Winter Sport M3 DSST	Tyres with run-flat properties ⇒ page 55
	Bridgestone	LM25	

Protected by copyright. Copying for private or commercial purposes, in part or in whole, is not permitted unless authorised by Volkswagen AG. Volkswagen AG does not guarantee or accept any liability with respect to the correctness of information in this document. Copyright by Volkswagen AG.

65.26 Winter tyres for Golf Plus from model year 2005

Observe the notes regarding the recommended makes of winter tyres ⇒ page 676

Tyre size	Make	Tread pattern	Remarks
195/65 R 15 91Q	Michelin	X-Ice	• Only for Japan: 1.6l FSI and 2.0l FSI engines
195/65 R 15 91T	Bridgestone	LM25	
	Dunlop	Winter Sport 3D	
195/65 R 15 91H	Continental	TS 810	

satelettronica

Tyre size	Make	Tread pattern	Remarks
	Dunlop	Winter Sport 3D	
	Goodyear	Eagle UG GW 3	
	Bridgestone	LM25	
	Pirelli	Winter 210	
	Nokian	WR	
195/65 R 15 95T	Goodyear	UG 6	
	Continental	TS 790	
205/55 R 16 91H	Goodyear	Eagle UG GW3	
	Michelin	Pilot Alpin	
	Nokian	WR	
	Pirelli	Winter 210	
	Bridgestone	LM25	
205/55 R 16 94H	Dunlop	SP Winter Sport M3 DSST	Tyres with run-flat properties ⇒ page 55
	Bridgestone	LM25	

65.27 Winter tyres for Golf Plus BlueMotion from model year 2008

Observe the notes regarding the recommended makes of winter tyres ⇒ page 676

Tyre size	Make	Tread pattern	Remarks
195/65 R 15 91T	Bridgestone	LM25	
	Dunlop	Winter Sport 3D	
195/65 R 15 91H	Continental	TS 810	
	Dunlop	Winter Sport 3D	
	Goodyear	Eagle UG GW 3	
	Bridgestone	LM25	
	Pirelli	Winter 210	
	Nokian	WR	
195/65 R 15 95T	Goodyear	UG 6	
	Continental	TS 790	

65.28 Winter tyres Bora, Bora 4Motion model year 1999 to model year 2005

Observe the notes regarding the recommended makes of winter tyres ⇒ page 676

Tyre size	Make	Tread pattern
195/65 R 15 91T	Continental	TS 790 Winter Contact
	Dunlop	SP Winter Sport M3
	Goodyear	Ultra Grip 6
	Michelin	Alpin
	Pirelli	Winter 190
195/65 R 15 91H	Continental	TS 790 Winter Contact
	Michelin	Pilot Alpin
	Nokian	NRW
	Vredestein	Wintrac

Protected by copyright. Copyright by Volkswagen AG. Volkswagen AG does not guarantee or accept any liability with respect to the correctness of information in this document. Copyright by Volkswagen AG. Reproduction or publication without permission is prohibited.
satelettronica

Tyre size	Make	Tread pattern
	Goodyear	Eagle UG GW3
205/55 R 16 91H	Continental	TS 790 Winter Contact
	Dunlop	SP Winter Sport M3
	Michelin	Pilot Alpin
	Pirelli	Winter 210
	Vredestein	Wintrac

65.29 Winter tyres Golf Variant, Golf Variant 4Motion model year 1999 to model year 2006, Bora Variant, Bora Variant 4Motion model year 1999 to model year 2005

Observe the notes regarding the recommended makes of winter tyres ⇒ page 676

Tyre size	Make	Tread pattern
195/65 R 15 91T	Continental	TS 790 Winter Contact
	Dunlop	SP Winter Sport M3
	Goodyear	Ultra Grip 6
	Michelin	Alpin
	Pirelli	Winter 190
195/65 R 15 91H	Continental	TS 790 Winter Contact
	Michelin	Pilot Alpin
	Nokian	NRW
	Vredestein	Wintrac
	Goodyear	Eagle UG GW3
205/55 R 16 91H	Continental	TS 790 Winter Contact
	Dunlop	SP Winter Sport M3
	Michelin	Pilot Alpin
	Pirelli	Winter 210
	Vredestein	Wintrac

65.30 Winter tyres for Golf 32

Observe the notes regarding the recommended makes of winter tyres ⇒ page 676

Tyre size	Make	Tread pattern
205/50 17 93T/H	Dunlop	SP Winter Sport M2

65.31 Winter tyres for Golf Anniversary GTI

Observe the notes regarding the recommended makes of winter tyres ⇒ page 676

Tyre size	Make	Tread pattern
205/55 R 16 91H	Continental	TS 790 Winter Contact
	Dunlop	SP Winter Sport M3
	Michelin	Pilot Alpin

Protected by copyright. Copying for private or commercial purposes, in part or in whole, is not permitted unless authorised by Volkswagen AG. Volkswagen AG does not guarantee or accept any liability with respect to the correctness of information in this document. Copyright by Volkswagen AG.
satelettronica

Tyre size	Make	Tread pattern
	Pirelli	Winter 210
	Vredestein	Wintrac

65.32 Winter tyres Golf Variant model year 2007 to model year 2010

Observe the notes regarding the recommended makes of winter tyres ⇒ page 676

Tyre size	Make	Tread pattern	Remarks
195/65 R 15 91Q	Michelin	X-Ice	• Only for Japan: 1.6l FSI and 2.0l FSI engines
195/65 R 15 91T	Bridgestone	LM25	
	Dunlop	Winter Sport 3D	
195/65 R 15 91H	Continental	TS 810	
	Dunlop	Winter Sport 3D	
	Goodyear	Eagle UG GW 3	
	Bridgestone	LM25	
	Pirelli	Winter 210	
	Nokian	WR	
195/65 R 15 95T	Goodyear	UG 6	
	Continental	TS 790	
205/55 R 16 91H	Goodyear	Eagle UG GW3	
	Michelin	Pilot Alpin	
	Nokian	WR	
	Pirelli	Winter 210	
	Bridgestone	LM25	
205/55 R 16 94H	Dunlop	SP Winter Sport M3 DSST	Tyres with run-flat properties ⇒ page 55
	Bridgestone	LM25	
205/50 R 17 93H	Dunlop	Winter Sport 3D	

65.33 Winter tyres for Golf Variant BlueMotion model year 2008 to model year 2010

Observe the notes regarding the recommended makes of winter tyres ⇒ page 676

Tyre size	Make	Tread pattern	Remarks
195/65 R 15 91T	Bridgestone	LM25	
	Dunlop	Winter Sport 3D	
195/65 R 15 91H	Continental	TS 810	
	Dunlop	Winter Sport 3D	
	Goodyear	Eagle UG GW 3	
	Bridgestone	LM25	
	Pirelli	Winter 210	
	Nokian	WR	
195/65 R 15 95T	Goodyear	UG 6	

Protected by copyright. Copying for private or commercial purposes, in part or in whole, is not permitted unless authorised by Volkswagen AG. Volkswagen AG does not guarantee or accept any liability with respect to the correctness of information in this document. Copyright by Volkswagen AG.
satelettronica

Tyre size	Make	Tread pattern	Remarks
	Continental	TS 790	

65.34 Winter tyres Jetta Model Year 2006 to Model Year 2011

Observe the notes regarding the recommended makes of winter tyres ⇒ page 676

Tyre size	Make	Tread pattern	Remarks
195/65 R 15 91Q	Michelin	X-Ice	• Only for Japan: 1.6l FSI and 2.0l FSI engines
195/65 R 15 91H	Continental	TS 810	
	Dunlop	Winter Sport 3D	
	Goodyear	Eagle UG GW 3	
	Bridgestone	LM25	
	Pirelli	Winter 210	
	Nokian	WR	
205/55 R 16 91H	Dunlop	Winter Sport 3D	
	Goodyear	Ultra Grip Performance	
	Pirelli	W210	
205/50 R 17 93H	Dunlop	Winter Sport 3D	

65.35 Winter tyres Jetta BlueMotion Model Year 2008 to Model Year 2011

Observe the notes regarding the recommended makes of winter tyres ⇒ page 676

Tyre size	Make	Tread pattern	Remarks
195/65 R 15 91H	Continental	TS 810	
	Dunlop	Winter Sport 3D	
	Goodyear	Eagle UG GW 3	
	Bridgestone	LM25	
	Pirelli	Winter 210	
	Nokian	WR	

65.36 Winter tyres Golf cabriolet model year 1998 to model year 2002

Observe the notes regarding the recommended makes of winter tyres ⇒ page 676

Tyre size	Make	Tread pattern
175/70 R13 82T	Uniroyal	MS + 4
	Goodyear	Ultra Grip 5
	Michelin	XM + S 130
185/60 R 14 82Q	Michelin	XM + S 130
185/60 R 14 82T	Continental	TS 780 Winter Contact
	Goodyear	Ultra Grip 5
	Michelin	Alpin
	Vredestein	Snowtrac

Protected by copyright. Copying for private or commercial purposes, in part or in whole, is not permitted unless authorised by Volkswagen AG. Volkswagen AG does not guarantee or accept any liability with respect to the correctness of information in this document.
Copyright by Volkswagen AG.
satelettronica

Tyre size	Make	Tread pattern
185/60 R 14 82H	Continental	TS 770 Winter Contact
185/55 R 15 85T	Continental	TS 770 Winter Contact
	Michelin	XM + S 130
185/55 R 15 82H	Continental	TS 770 Winter Contact
185/60 R 14 86T	Continental	TS 770 Winter Contact
	Michelin	XM + S 130

65.37 Winter tyres for New Beetle from model year 1999

Observe the notes regarding the recommended makes of winter tyres ⇒ page 676

Tyre size	Make	Tread pattern
195/65 R 15 91T	Continental	TS 790 Winter Contact
	Dunlop	SP Winter Sport M3
	Goodyear	Ultra Grip 6
	Michelin	Alpin
	Pirelli	Winter 190
195/65 R 15 91H	Continental	TS 790 Winter Contact
	Michelin	Pilot Alpin
	Nokian	NRW
	Vredestein	Wintrac
	Goodyear	Eagle UG GW3
205/55 R 16 91H	Continental	TS 790 Winter Contact
	Dunlop	SP Winter Sport M3
	Michelin	Pilot Alpin
	Pirelli	Winter 210
	Vredestein	Wintrac

65.38 Winter tyres for New Beetle Cabriolet from model year 2003

Observe the notes regarding the recommended makes of winter tyres ⇒ page 676

Tyre size	Make	Tread pattern
195/65 R 15 91T	Continental	TS 790 Winter Contact
	Dunlop	SP Winter Sport M3
	Goodyear	Ultra Grip 6
	Michelin	Alpin
	Pirelli	Winter 190
195/65 R 15 91H	Continental	TS 790 Winter Contact
	Michelin	Pilot Alpin
	Nokian	NRW
	Vredestein	Wintrac
	Goodyear	Eagle UG GW3
205/55 R 16 91H	Continental	TS 790 Winter Contact
	Dunlop	SP Winter Sport M3
	Michelin	Pilot Alpin

Protected by copyright. Copying for private or commercial purposes, in part or in whole, is not permitted unless authorised by Volkswagen AG. Volkswagen AG does not guarantee or assume any liability with respect to the correctness of information in this document. Copyright by Volkswagen AG.
satelettronica

Tyre size	Make	Tread pattern
	Pirelli	Winter 210
	Vredestein	Wintrac

65.39 Winter tyres for New Beetle RSi

Observe the notes regarding the recommended makes of winter tyres ⇒ page 676

Tyre size	Make	Tread pattern
205/55 R 16 91H	Dunlop	SP Winter Sport M3
	Michelin	Pilot Alpin
	Pirelli	Winter 210

65.40 Winter tyres Passat model year 1994 to model year 1997

Observe the notes regarding the recommended makes of winter tyres ⇒ page 676

Tyre size	Make	Tread pattern
185/65 R 14 86T	Continental	TS 760 Winter Contact
	Goodyear	Ultra Grip 4 +
	Michelin	XM + S 130
	Uniroyal	MS + 4
195/60 R 14 86T	Continental	TS 770 Winter Contact
	Goodyear	Ultra Grip 4 +
	Michelin	XM + S 130
205/50 R 15 86H	Michelin	TXM + S 330

65.41 Winter tyres Passat model year 1997 to model year 2005

Observe the notes regarding the recommended makes of winter tyres ⇒ page 676

Tyre size	Make	Tread pattern	Remarks
195/65 R 15 91T	Continental	TS 790 Winter Contact	
	Dunlop	SP Winter Sport M3	
	Goodyear	Ultra Grip 6	
	Michelin	Alpin	
	Pirelli	Winter 190	
195/65 R 15 91H	Continental	TS 790 Winter Contact	
	Michelin	Pilot Alpin	
	Nokian	NRW	
	Vredestein	Wintrac	
	Dunlop	SP Winter Sport M3	
205/55 R 16 91Q	Michelin	X-Ice	For Japan only
205/55 R 16 91H	Continental	TS 790 Winter Contact	
	Dunlop	SP Winter Sport M3	
	Michelin	Pilot Alpin	
	Pirelli	Winter 210	

Protected by copyright. Copyright by Volkswagen AG. Volkswagen AG does not guarantee or accept any liability with respect to the correctness of information in this document. Copyright by Volkswagen AG. Any other use, or commercial use, is not permitted unless authorised by Volkswagen AG. Volkswagen AG does not guarantee or accept any liability with respect to the correctness of information in this document. Copyright by Volkswagen AG.
satelettronica

Tyre size	Make	Tread pattern	Remarks
	Vredestein	Wintrac	
205/55 R 16 94H	Dunlop	SP Winter Sport M3	

65.42 Winter tyres for Passat W8

Observe the notes regarding the recommended makes of winter tyres ⇒ page 676

Tyre size	Make	Tread pattern
205/55 R 16 94H XL XL means “Extra Load” Notes ⇒ page 17	Dunlop	SP Winter Sport M3
205/50 R 17 93H for Europe	Dunlop	SP Winter Sport M2
225/45 R 17 91H	Continental	TS 790 Winter Contact
	Dunlop	SP Winter Sport M3
	Michelin	Pilot Alpin
	Pirelli	Winter 210
225/45 R 17 91V	Continental	TS 790 Winter Contact
	Pirelli	Winter 240

65.43 Winter tyres for Passat Protect

Observe the notes regarding the recommended makes of winter tyres ⇒ page 676

Tyre size	Make	Tread pattern
205/55 R 16 94H XL	Dunlop	SP Winter Sport M3

XL means “Extra Load” ⇒ page 17

65.44 Winter tyres for Passat saloon from model year 2006

Observe the notes regarding the recommended makes of winter tyres ⇒ page 676

Tyre size	Make	Tread pattern	Remarks
195/65 R 15 91Q	Michelin	X-Ice	• Only for Japan: 1.6l FSI and 2.0l FSI engines
205/55 R 16 91H	Dunlop	Winter Sport 3D	
	Pirelli	Winter 210	
	Goodyear	Eagle UG GW3	
205/55 R 16 94H	Dunlop	Winter Sport 3D	
	Pirelli	Winter 210	
	Nokian	WR G2	
	Dunlop	Winter Sport M3 DSST	Tyres with run-flat properties ⇒ page 55
205/50 R 17 93H	Dunlop	Winter Sport 3D	

Protected by copyright. Copying for private or commercial purposes, in part or in whole, is not permitted unless authorised by Volkswagen AG. Volkswagen AG does not guarantee or accept any liability with respect to the correctness of information in this document. Copyright by Volkswagen AG.
satelettronica

Tyre size	Make	Tread pattern	Remarks
	Continental	TS810	Self-sealing tyres “ContiSeal” ⇒ Workshop manual: Running gear, axles, steering; Rep. gr. 44 ; Self-sealing tyres “Conti-Seal”
215/55 R 16 97Q XL	Michelin	X-Ice	• Only for Japan: 2.0l FSI and 2.0l FSI turbo engines
235/45 R 17 94Q	Michelin	X-Ice	• Only for Japan: 2.0l FSI turbo engines and 3.2l V6 FSI 4Motion
235/45 R 17 94H	Dunlop	Winter Sport M3	

XL means “Extra Load” ⇒ page 17

65.45 Winter tyres for Passat saloon BlueMotion from model year 2008

Observe the notes regarding the recommended makes of winter tyres ⇒ page 676

Tyre size	Make	Tread pattern	Remarks
205/55 R 16 91H	Dunlop	Winter Sport 3D	
	Pirelli	Winter 210	
	Goodyear	Eagle UG GW3	
205/55 R 16 94H	Dunlop	Winter Sport 3D	
	Pirelli	Winter 210	
	Nokian	WR G2	
	Dunlop	Winter Sport M3 DSST	Tyres with run-flat properties ⇒ page 55
205/50 R 17 93H	Dunlop	Winter Sport 3D	
	Continental	TS810	Self-sealing tyres “ContiSeal” ⇒ Workshop manual: Running gear, axles, steering; Rep. gr. 44 ; Self-sealing tyres “Conti-Seal”

65.46 Winter tyres for Passat Variant from model year 2006

Observe the notes regarding the recommended makes of winter tyres ⇒ page 676

Tyre size	Make	Tread pattern	Remarks
195/65 R 15 91Q	Michelin	X-Ice	• Only for Japan: 1.6l FSI and 2.0l FSI engines
205/55 R 16 91H	Dunlop	Winter Sport 3D	
	Pirelli	Winter 210	
	Goodyear	Eagle UG GW3	
205/55 R 16 94H	Dunlop	Winter Sport 3D	
	Pirelli	Winter 210	
	Nokian	WR G2	
	Dunlop	Winter Sport M3 DSST	Tyres with run-flat properties ⇒ page 55
205/50 R 17 93H	Dunlop	Winter Sport 3D	

Protected by copyright. Copying for private or commercial purposes, in part or in whole, is not permitted unless authorised by Volkswagen AG. Volkswagen AG does not guarantee or accept any liability with respect to the correctness of information in this document. Copyright by Volkswagen AG.

satelettronica

Tyre size	Make	Tread pattern	Remarks
	Continental	TS810	Self-sealing tyres “ContiSeal” ⇒ Workshop manual: Running gear, axles, steering; Rep. gr. 44 ; Self-sealing tyres “Conti-Seal”
215/55 R 16 97Q XL	Michelin	X-Ice	• Only for Japan: 2.0l FSI and 2.0l FSI turbo engines
235/45 R 17 94Q	Michelin	X-Ice	• Only for Japan: 2.0l FSI turbo engines and 3.2l V6 FSI 4Motion
235/45 R 17 94H	Dunlop	Winter Sport M3	

XL means “Extra Load” ⇒ page 17

65.47 Winter tyres for Passat Variant BlueMotion from model year 2008

Observe the notes regarding the recommended makes of winter tyres ⇒ page 676

Tyre size	Make	Tread pattern	Remarks
205/55 R 16 91H	Dunlop	Winter Sport 3D	
	Pirelli	Winter 210	
	Goodyear	Eagle UG GW3	
205/55 R 16 94H	Dunlop	Winter Sport 3D	
	Pirelli	Winter 210	
	Nokian	WR G2	
	Dunlop	Winter Sport M3 DSST	Tyres with run-flat properties ⇒ page 55
205/50 R 17 93H	Dunlop	Winter Sport 3D	
	Continental	TS810	Self-sealing tyres “ContiSeal” ⇒ Workshop manual: Running gear, axles, steering; Rep. gr. 44 ; Self-sealing tyres “Conti-Seal”

65.48 Winter tyres for Passat R36 from model year 2008

Observe the notes regarding the recommended makes of winter tyres ⇒ page 676

Tyre size	Make	Tread pattern	Remarks
205/50 R 17 93H	Dunlop	Winter Sport 3D	
	Continental	TS810	Self-sealing tyres “ContiSeal” ⇒ Workshop manual: Running gear, axles, steering; Rep. gr. 44 ; Self-sealing tyres “Conti-Seal”
235/45 R 17 94H	Dunlop	Winter Sport M3	

Protected by copyright. Copying for private and commercial purposes, in part or in whole, is not permitted unless authorised by Volkswagen AG. Volkswagen AG does not guarantee or accept any liability with respect to the correctness of information. Copyright by Volkswagen AG.
satelettronica

65.49 Winter tyres for Sharan from model year 1996

Observe the notes regarding the recommended makes of winter tyres ⇒ page 676

Tyre size	Make	Tread pattern
195/65 R 15 95T	Continental	TS 770 Winter Contact
Only 16" tyres are permitted for vehicles from model year 2002		
195/60 R 16 C 99/97T	Dunlop	SP Winter Sport M2
	Dunlop	SP Winter Sport 3D
	Bridgestone	Blizzak LM18C
215/55 R 16 97H	Dunlop	SP Winter Sport M3

65.50 Winter tyres for Sharan BlueMotion from model year 2009

Observe the notes regarding the recommended makes of winter tyres ⇒ page 676

Tyre size	Make	Tread pattern
195/60 R 16 C 99/97T	Dunlop	SP Winter Sport M2
	Dunlop	SP Winter Sport 3D
	Bridgestone	Blizzak LM18C

65.51 Winter tyres for Touareg model year 2003 to model year 2010

Observe the notes regarding the recommended makes of winter tyres ⇒ page 676

Tyre size	Make	Tread pattern	Remarks
235/70 R 16 106T	Continental	4x4 Winter Contact	
235/65 R 17 108H XL	Dunlop	Winter SPT3 DMS	
	Pirelli	Scorpion Ice & Snow	
255/55 R 18 109V XL	Pirelli	Scorpion Ice & Snow	
	Dunlop	Grandtrek Winter M3	
	Michelin	Latitude Alpin	
255/50 R 19 109Q	Michelin	Latitude X-Ice	♦ For Japan only ♦ For V6 and V8 engines only
255/50 R 19 107V XL	Pirelli	Scorpion Ice & Snow	
	Dunlop	Grandtrek Winter M3	

XL means “Extra Load” ⇒ page 17

65.52 Winter tyres for Touareg R50 model year 2008 to model year 2010

Observe the notes regarding the recommended makes of winter tyres ⇒ page 676

Tyre size	Make	Tread pattern	Remarks
255/50 R 19 107V XL	Pirelli	Scorpion Ice & Snow	
	Dunlop	Grandtrek Winter M3	

XL means “Extra Load” ⇒ page 17

Protected by copyright. Copyright by Volkswagen AG. Volkswagen AG does not guarantee or accept any liability with respect to the correctness of information in this document. Copyright by Volkswagen AG. Protected by copyright. Copying for private or commercial purposes, in part or in whole, is not permitted unless authorised by Volkswagen AG.
satelettronica

Protected by copyright. Copying for private or commercial purposes, in part or in whole, is not permitted unless authorised by Volkswagen AG. Volkswagen AG does not guarantee or accept any liability with respect to the correctness of information in this document. Copyright by Volkswagen AG.

satelettronica